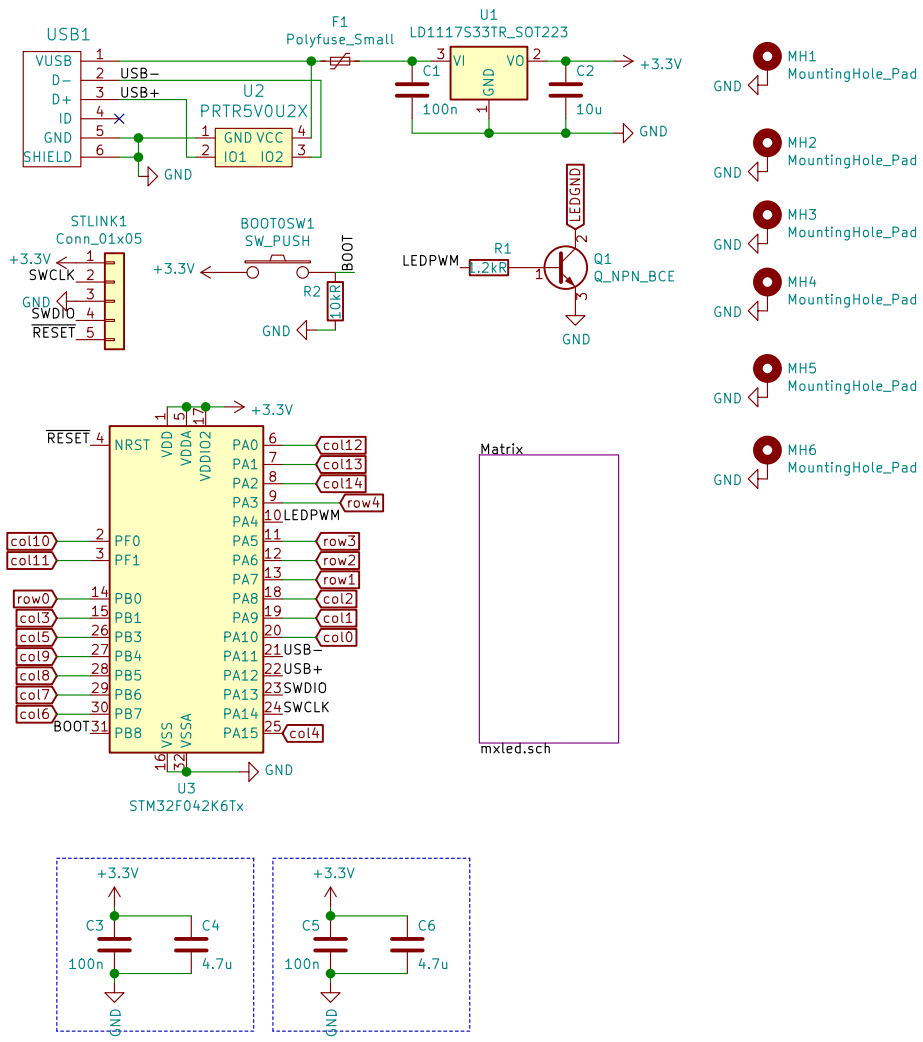

Sheet: /
File: vinta.sch

Title: Vinta Schematics

Size: A4	Date:	Rev:
KiCad E.D.A. kicad (5.0.0)		Id: 1/2

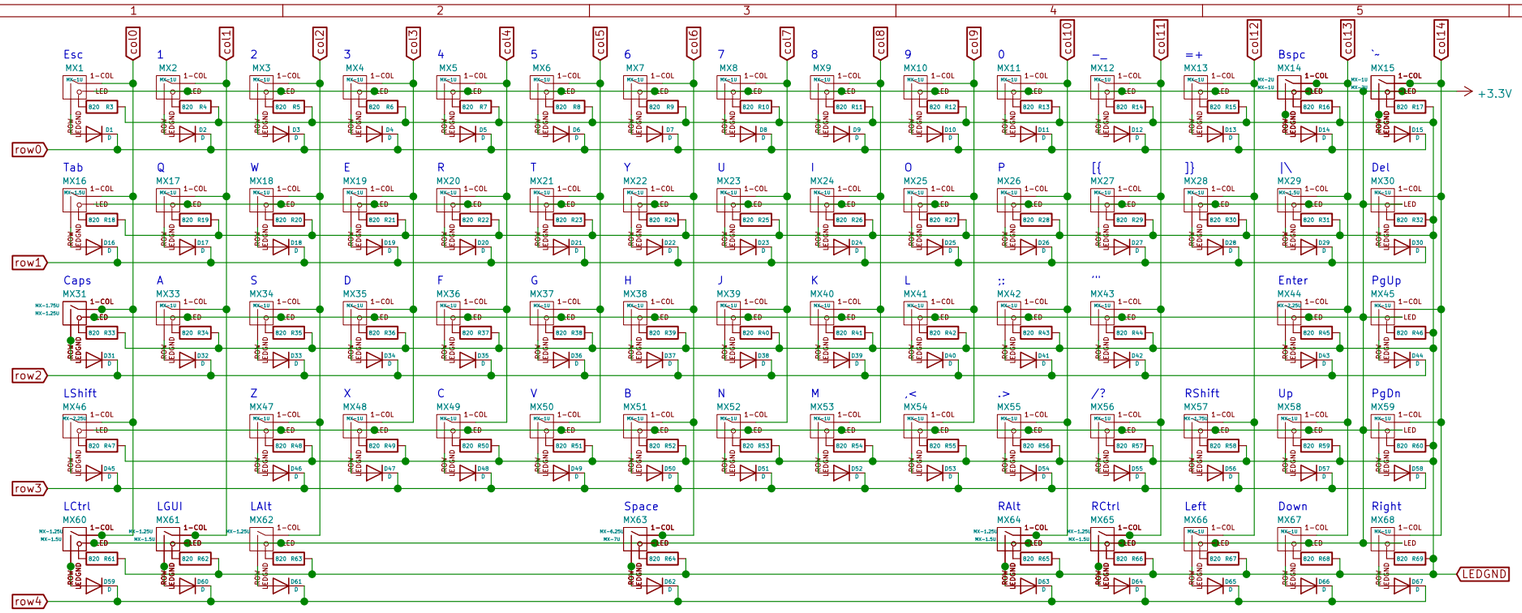

Note: Extra duplicated switches are invisible overlaps in the matrix

Sheet: /Matrix/
File: mxled.sch

Title:

Size: A3	Date:	Rev:
KiCad E.D.A. kicad (5.0.0)		Id: 2/2