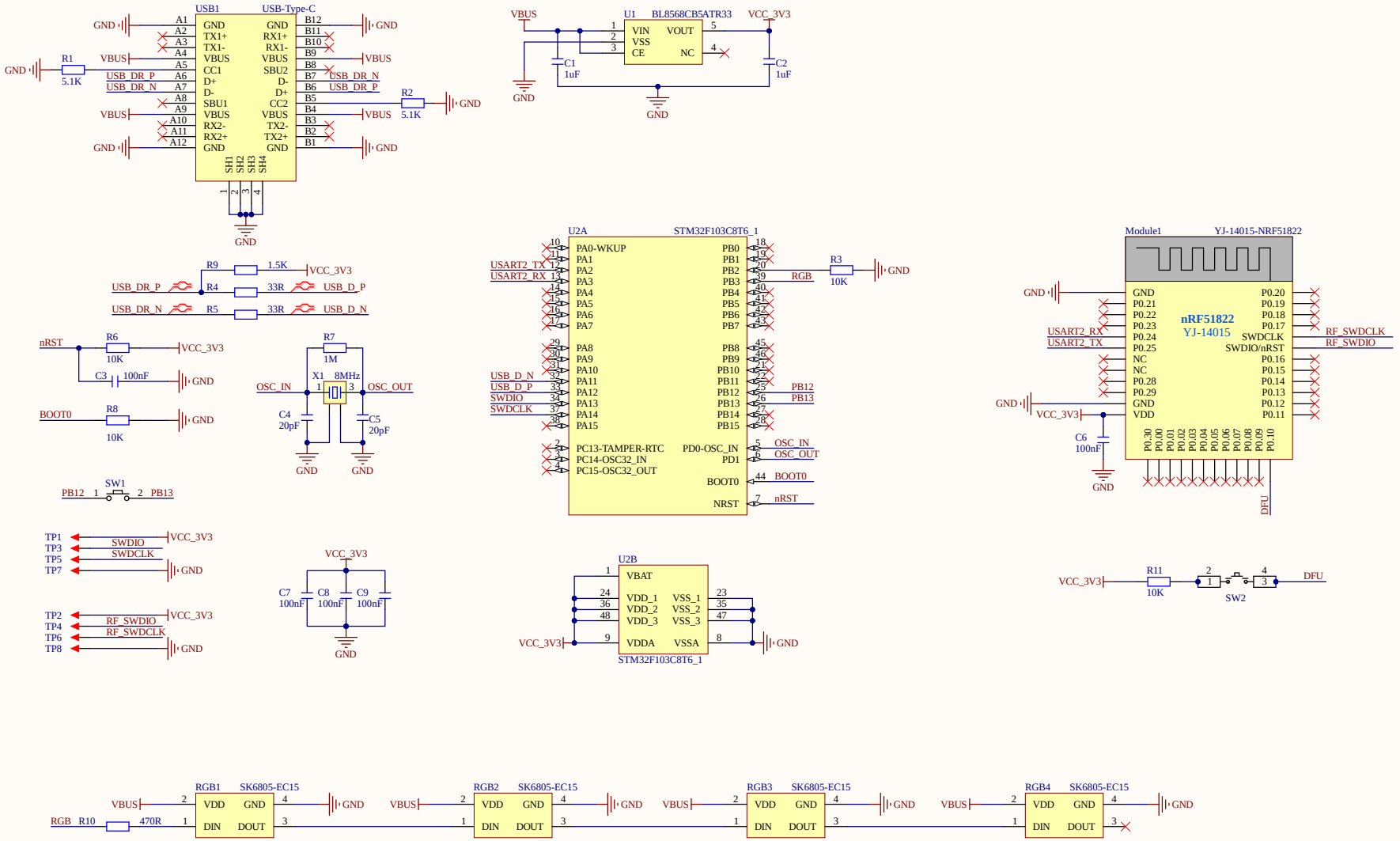

Title		
Size A3	Number	Revision
Date: 8/01/2023	Sheet of	
File: D:\work\..\w_alice_receiver.SchDoc	Drawn By:	