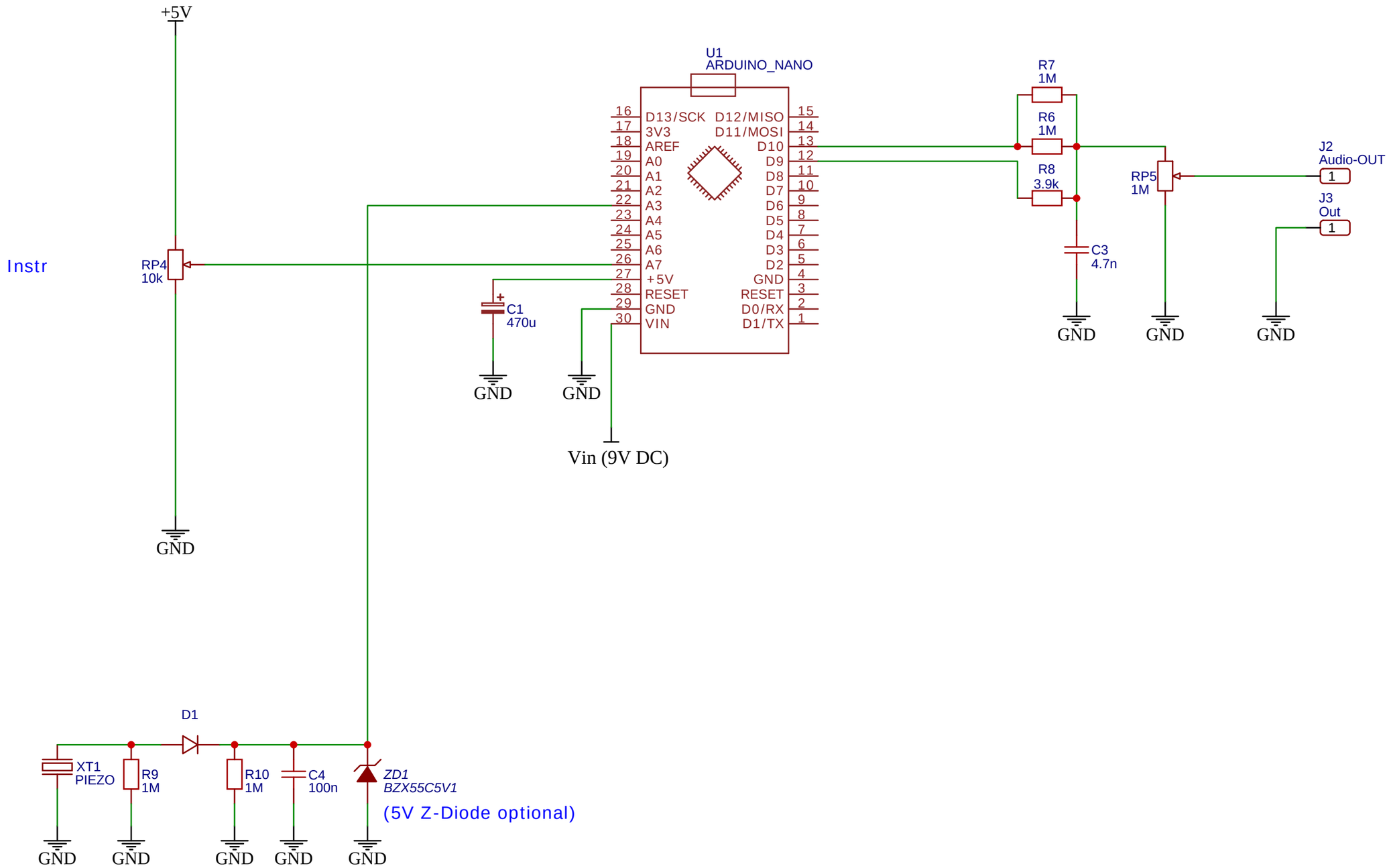

TITLE: Arduino Drum		REV: 1.0
EasyEDA	Company: Your Company	Sheet: 1/1
	Date: 2021-03-03 Drawn By:	