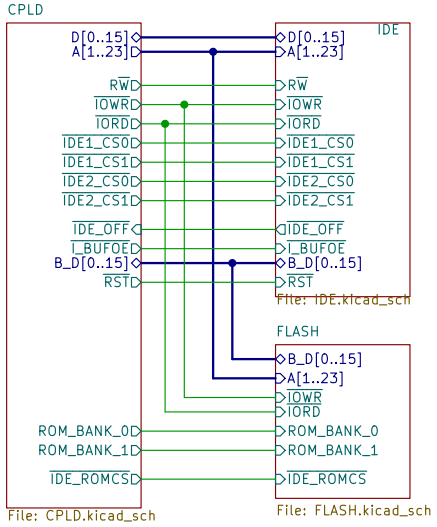


Sheet: /
File: RIPPLE.kicad_sch

**Title:**

| Size: A4 | Date: | **Rev:** |
|---|---|---|
| KiCad E.D.A. eeschema 6.0.11+dfsg-1~bpo11+1 | | Id: 1/4 |

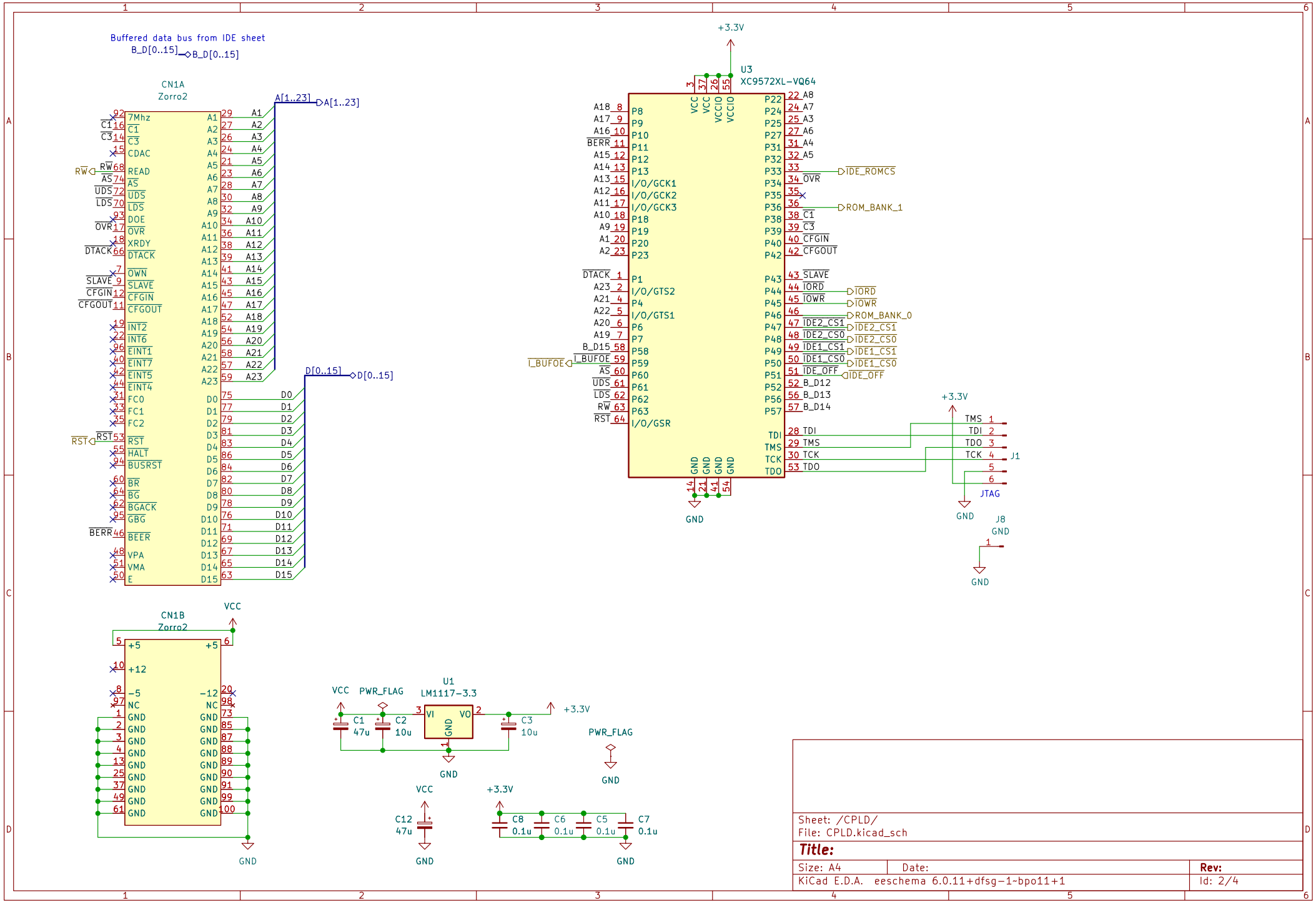
Buffered data bus from IDE sheet
B_D[0..15]
B_D[0..15]
CN1A
Zorro2
A[1..23]
A[1..23]
D[0..15]
D[0..15]
U3
XC9572XL-VQ64
+3.3V
GND
IDE_ROMCS
ROM_BANK_1
IORD
IOWR
ROM_BANK_0
IDE2_CS1
IDE2_CS0
IDE1_CS1
IDE1_CS0
IDE_OFF
I_BUFOE
J1
JTAG
J8
CN1B
Zorro2
VCC
U1
LM1117-3.3
PWR_FLAG
C1 47u
C2 10u
C3 10u
C12 47u
C8 0.1u
C6 0.1u
C5 0.1u
C7 0.1u
Sheet: /CPLD/
File: CPLD.kicad_sch
Title:
Size: A4
Date:
Rev:
KiCad E.D.A. eeschema 6.0.11+dfsg-1-bpo11+1
Id: 2/4

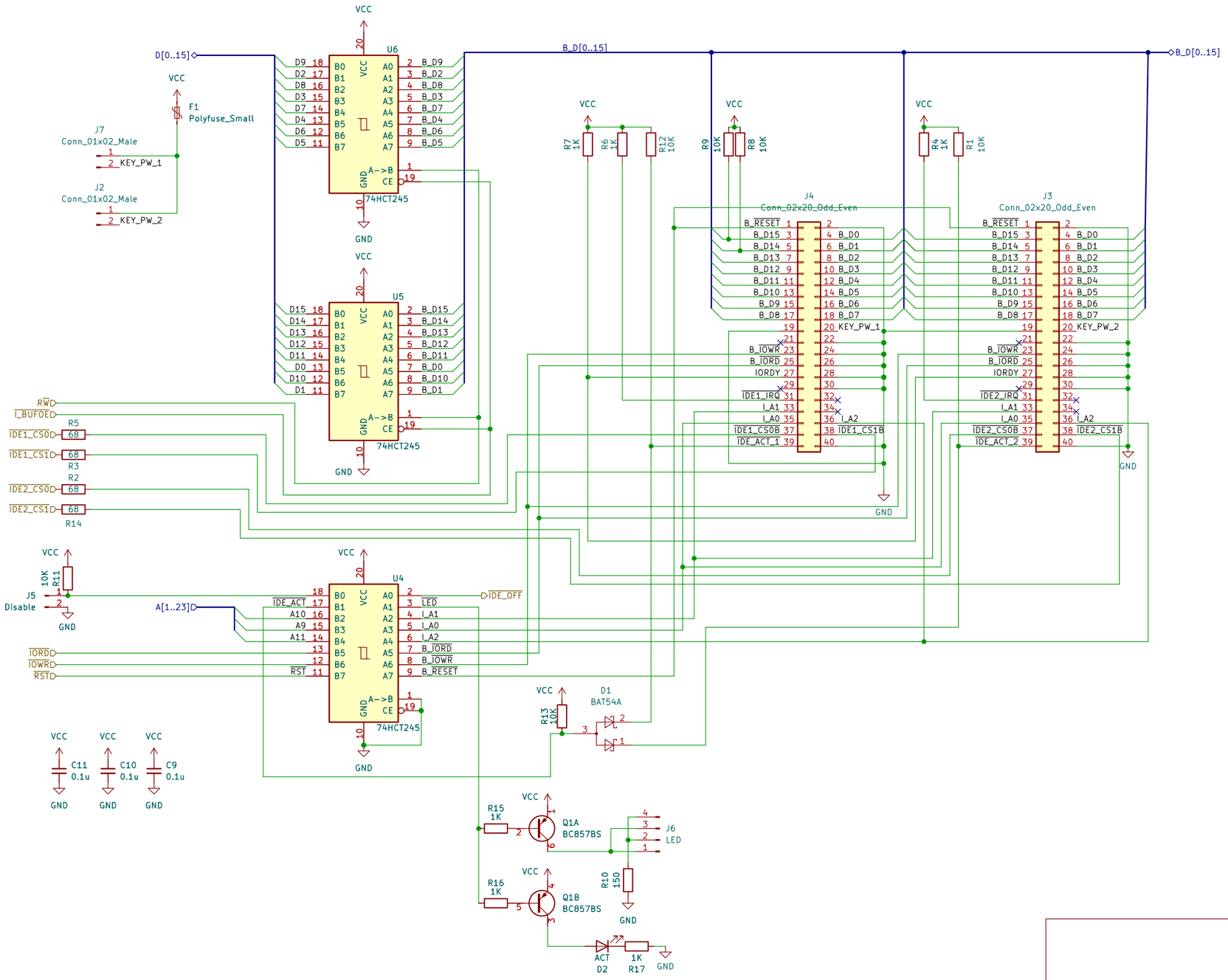


Sheet: /IDE/
File: IDE.kicad_sch

**Title:**

| Size: A3 | Date: | Rev: |
|---|---|---|
| KiCad E.D.A. eeschema 6.0.11+dfsg-1~bpo11+1 | | Id: 4/4 |

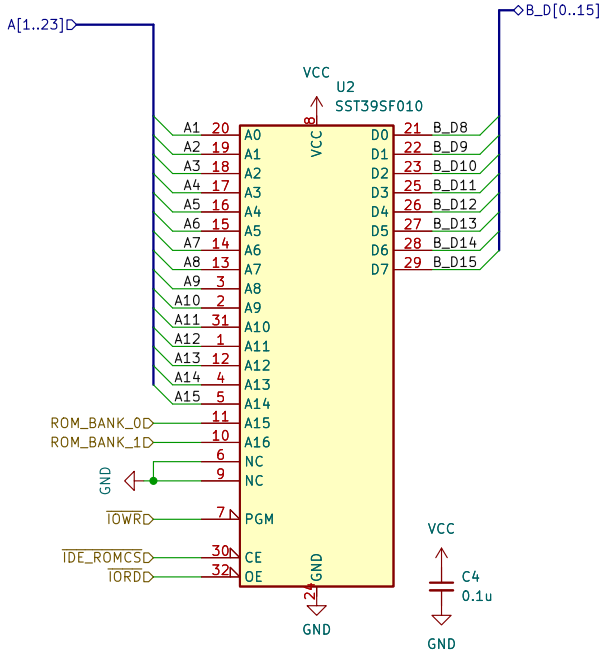


Sheet: /FLASH/
File: FLASH.kicad_sch

**Title:**

| Size: A4 | Date: | Rev: |
|---|---|---|
| KiCad E.D.A. eeschema 6.0.11+dfsg-1~bpo11+1 | | Id: 5/4 |