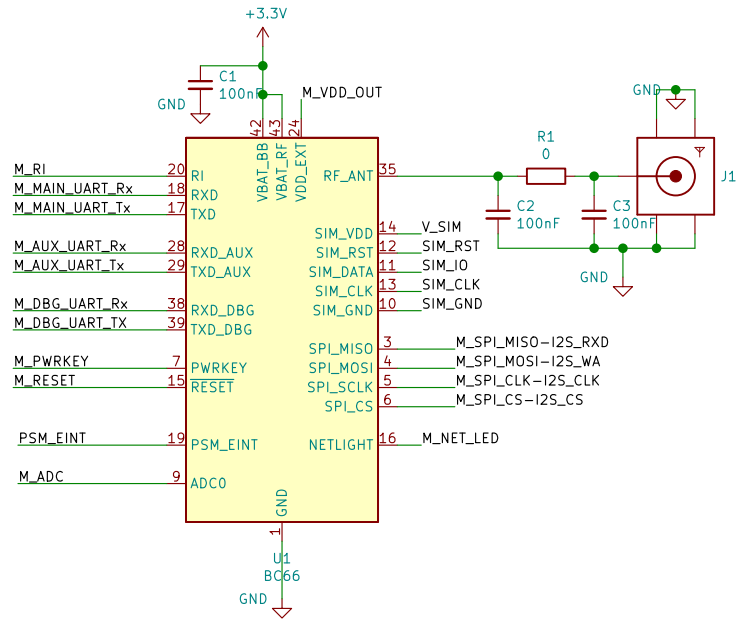

Connectors to the module board

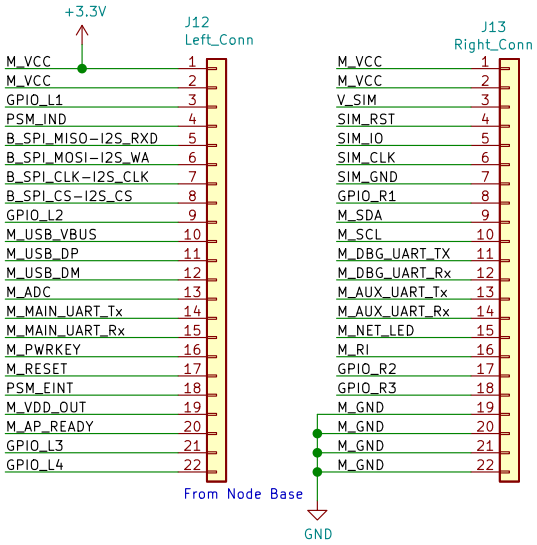

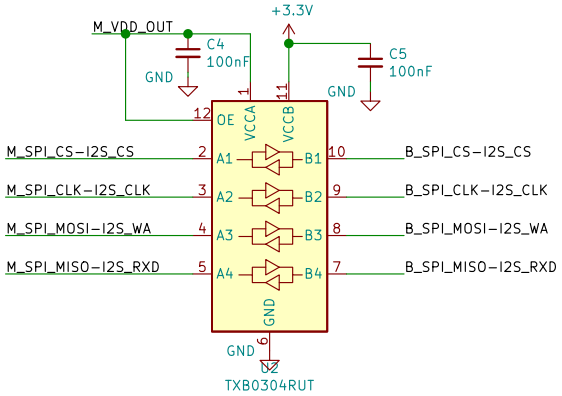

Note:
VCCA is the low voltage side (from module)
VCCB is the high voltage side (from base)

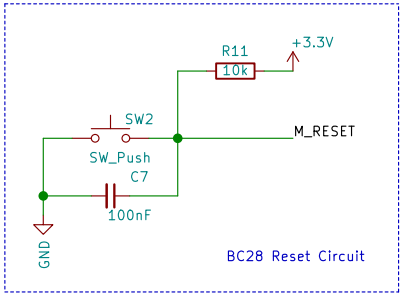

Sheet: /
File: bc26_bc66_module_board.sch

Title:

Size: A4	Date:	Rev:
KiCad E.D.A. kicad 5.99.0-unknown-89e985786ubuntu18.04.1		Id: 1/1