THIS DRAWING IS UNPUBLISHED. RELEASED FOR PUBLICATION - ,- .
© COPYRIGHT - BY TYCO ELECTRONICS CORPORATION. ALL RIGHTS RESERVED.

LOC	DIST
AA	22

REVISIONS

P	LTR	DESCRIPTION	DATE	DWN	APVD
	C	REV PER ECO-08-015108	14JUN2008	QL	TX
	D	REV PER ECO-09-016168	09JUL2009	VL	LR
	D1	REV PER ECO-09-027197	09DEC09	KK	AEG

MECHANICAL:

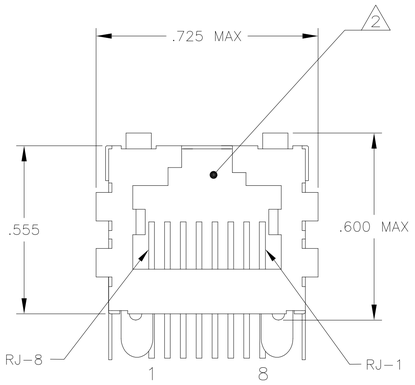

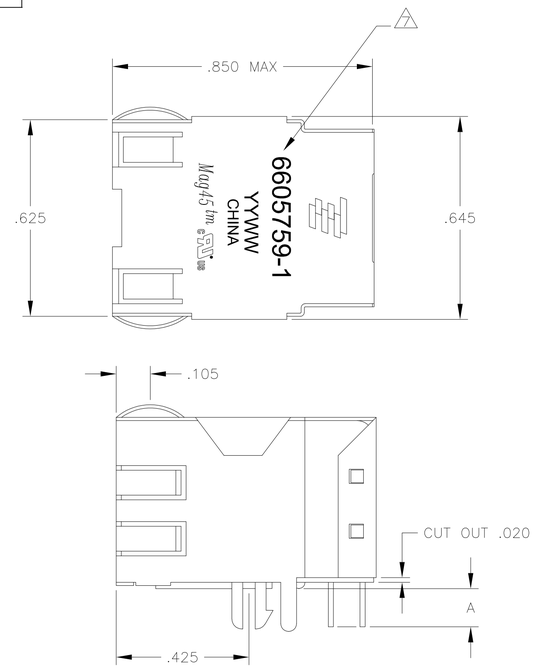

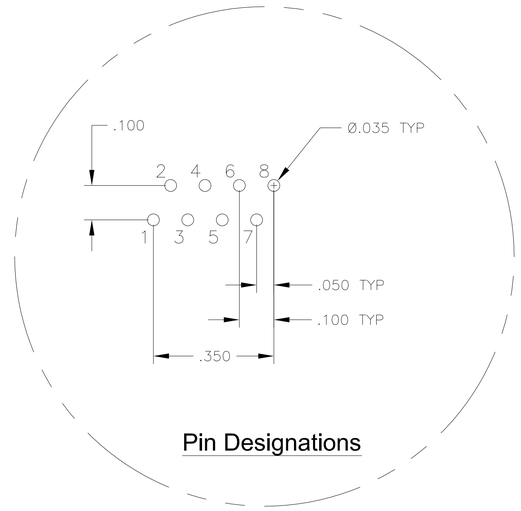

Pin Designations

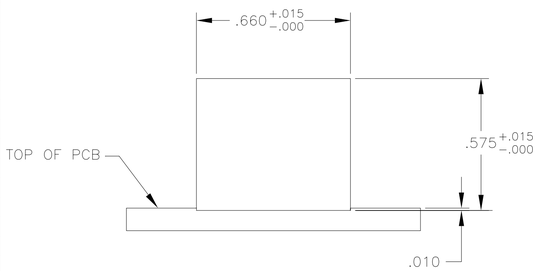

Suggested Panel Cutout

726 SERIES MAGNETIC CIRCUIT 3 6

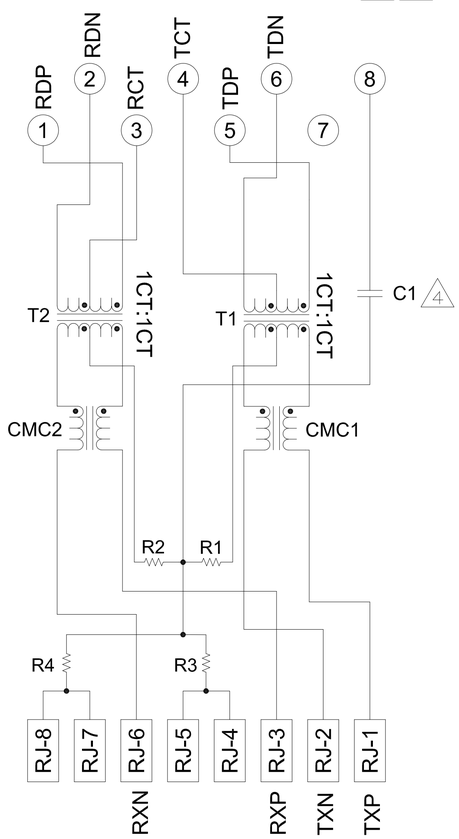

C1 = 1000 pF, 2kV DECOUPLING CAPACITOR

R1-R4 = 75 OHMS, 1/16W RESISTORS.

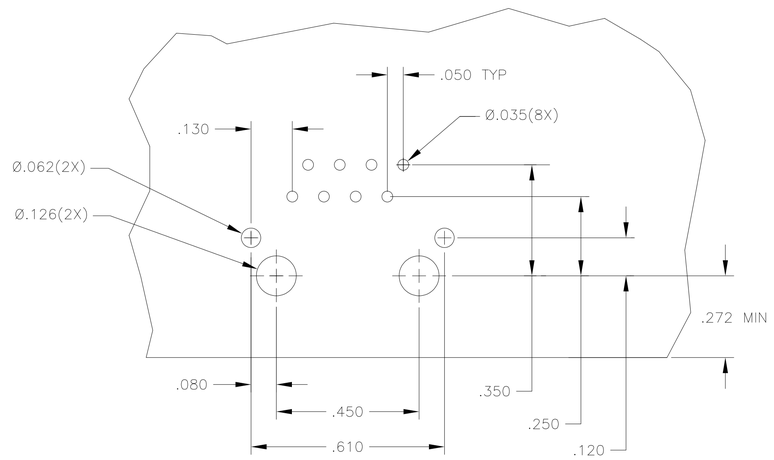

Suggested PCB Layout
(Component Side)

1 MATERIALS:
- -HOUSING - THERMOPLASTIC PET POLYESTER FLAMMABILITY RATING UL 94V-0.
- -SHIELD - 0.010" THICK, C26800 BRASS PREPLATED WITH 30µINCH MIN SEMI-BRIGHT NICKEL, SOLDER TABS POST DIPPED WITH 100µINCH MIN SAC SOLDER.
- -MOD JACK CONTACTS - 0.0157" x 0.018" PHOSPHOR BRONZE, 50µINCH MIN OVERALL NICKEL UNDERPLATE, WITH SELECT 50µINCH MIN HARD GOLD FINISH PLATE. SOLDERTAILS WITH 100µINCH MIN MATTE TIN AND/OR SAC SOLDER DIP.

2 RJ45 JACK CAVITY CONFORMS TO FCC RULES AND REGULATIONS PART 68, SUB PART F.

3 MAGNETICS
- -IMPEDANCE: 100 OHMS
- -TURNS RATIO (CHIP: CABLE): TX = 1:1, RX = 1:1
- -OPEN CIRCUIT INDUCTANCE (OCL): 350µH MIN @100kHz, 0.1VRMS, 8mADC BIAS FROM 0°C TO 70°C, TX AND RX
- -PERFORMANCE @ 25°C:
  - INSERTION LOSS (IL): 1.1dB MAX FROM 0.5MHz TO 100MHz
  - RETURN LOSS (RL): 18dB MIN FROM 0.5MHZ TO 30MHz
    - 18-20LOG(f/30)dB MIN FROM 30.1MHz TO 60MHz
    - 12dB MIN FROM 60.1MHz TO 80MHz
  - CROSSTALK ATTENUATION: 35dB MIN FROM 0.5MHz TO 40MHz
    - 33-20*LOG(f/50)dB MIN FROM 40.1MHz TO 100MHz
  - COMMON MODE REJECTION RATIO (CMRR): 30dB MIN FROM 0.5MHz TO 100MHz
- -ISOLATION VOLTAGE: COMPLIES WITH IEEE802.3 2002, PARA 23.5.1.1, ITEM b.

4 IF NO CAPACITOR, TRACE IS CONTINUOUS.

5. OPERATING TEMPERATURE: FROM 0° TO +70°C.

6 INDICATED CONNECTIONS ARE FOR NIC CONFIGURATION. THE MAGNETICS ARE SYMMETRIC TO SUPPORT AUTO-MDI/MDIX.

7 TYCO ELECTRONICS LOGO, PART NUMBER, DATE CODE, COUNTRY OF ORIGIN AND AGENCY APPROVAL MARKING IN APPROXIMATE LOCATION SHOWN.

8. THESE PARTS ARE RECOMMENDED FOR WAVE SOLDERING PROCESS, PEAK WAVE SOLDERING TEMPERATURE IS 265°C MAX, 10 SECONDS MAX.

9 OBSOLETE PARTS: OBSOLETE CIS STREAMLINING PER D.RENAUD/D.SINISI

	.090±.010	YES	1-6605759-1
9 OBSOLETE	.145±.010	NO	~~6605759-2~~
	.145±.010	YES	6605759-1
	DIM A	4 DECOUPLING CAPACITOR	PART NUMBER

THIS DRAWING IS A CONTROLLED DOCUMENT.

DIMENSIONS: INCHES

TOLERANCES UNLESS OTHERWISE SPECIFIED:
0 PLC ± -
1 PLC ± -
2 PLC ± .010
3 PLC ± .005
4 PLC ± -
ANGLES ± -

MATERIAL 1 FINISH 1

DWN 01MAR2005 L. VARELA - DOCK5
CHK 01MAR2005 D. FAROLE
APVD 01MAR2005 D. FAROLE
PRODUCT SPEC 108-2100
APPLICATION SPEC -
WEIGHT -

Tyco Electronics
Tyco Electronics Corporation
Harrisburg, PA 17105-3608

NAME 1X1 MAG45(TM), MODULAR JACK, 7N2 SCHEMATIC (10/100 ETHERNET), 726 SERIES CIRCUIT, SHIELDED, OPTIONAL DECOUPLING CAPACITOR, NO LEDS

SIZE	CAGE CODE	DRAWING NO	RESTRICTED TO
A1	00779	C-6605759	-

CUSTOMER DRAWING SCALE NTS SHEET 1 OF 1 REV D1