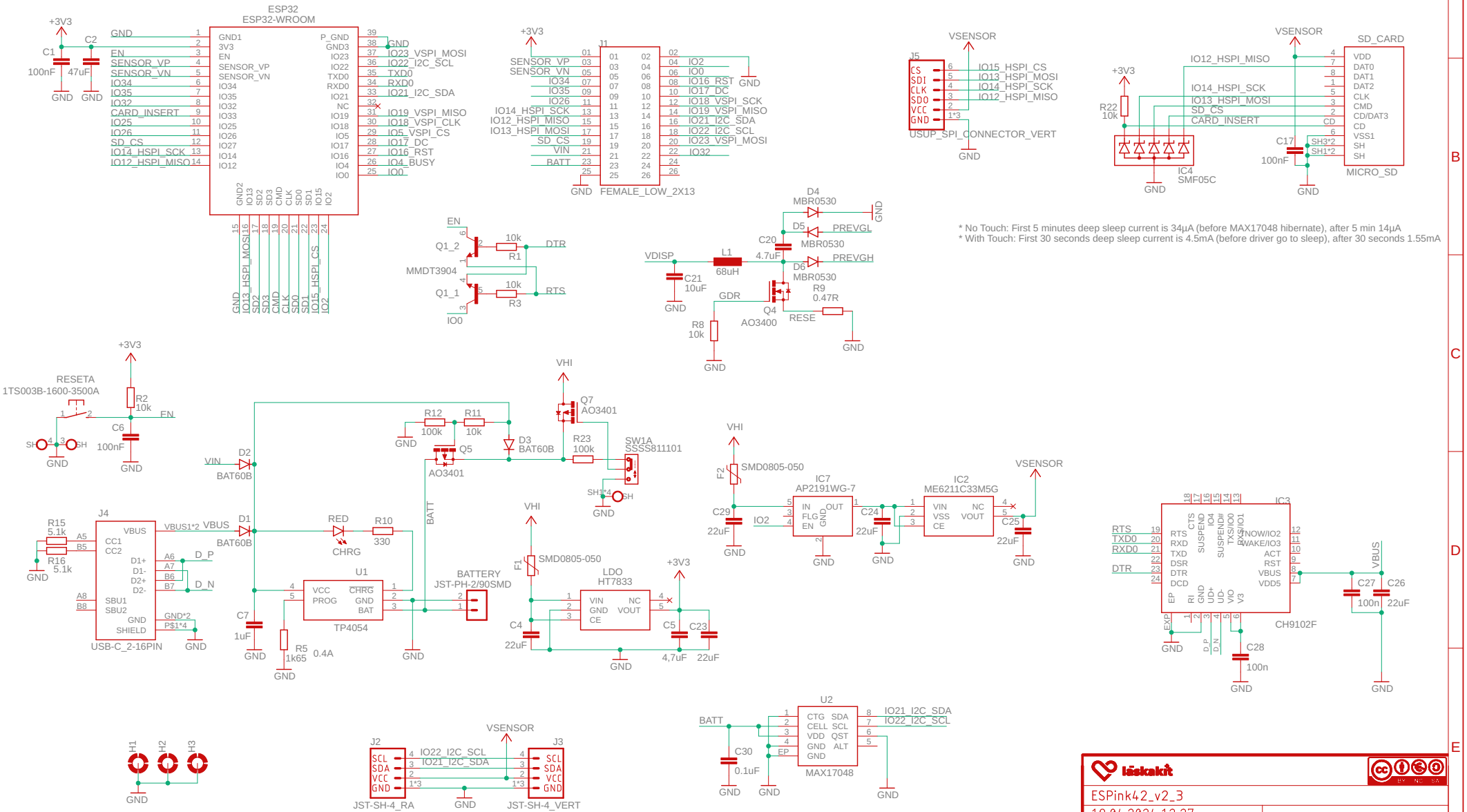
ESP32
ESP32-WROOM
GND1
3V3
EN
SENSOR_VP
SENSOR_VN
IO34
IO35
IO32
IO33
IO25
IO26
IO27
IO14
IO12
P_GND
GND3
IO23
IO22
TXD0
RXD0
IO21
NC
IO19
IO18
IO5
IO17
IO16
IO4
IO0
GND2
IO13
SD2
SD3
CMD
CLK
SD0
SD1
IO15
IO2
CARD_INSERT
SD_CS
IO14_HSPI_SCK
IO12_HSPI_MISO
IO23_VSPI_MOSI
IO22_I2C_SCL
IO21_I2C_SDA
IO19_VSPI_MISO
IO18_VSPI_CLK
IO5_VSPI_CS
IO17_DC
IO16_RST
IO4_BUSY
IO13_HSPI_MOSI
IO15_HSPI_CS
J1
FEMALE_LOW_2X13
IO2
IO0
IO16_RST
IO17_DC
IO18_VSPI_SCK
IO19_VSPI_MISO
IO21_I2C_SDA
IO22_I2C_SCL
IO23_VSPI_MOSI
IO32
J5
USUP_SPI_CONNECTOR_VERT
IO15_HSPI_CS
IO13_HSPI_MOSI
IO14_HSPI_SCK
IO12_HSPI_MISO
VSENSOR
IC4
SMF05C
R22
10k
SD_CARD
MICRO_SD
VDD
DAT0
DAT1
DAT2
CLK
CMD
CD/DAT3
CD
VSS1
SH
C17
100nF
Q1_2
Q1_1
MMDT3904
R1
R3
DTR
RTS
D4
MBR0530
D5
D6
PREVGL
PREVGH
C20
4.7uF
L1
68uH
VDISP
C21
10uF
GDR
Q4
AO3400
R9
0.47R
RESE
R8
10k
* No Touch: First 5 minutes deep sleep current is 34µA (before MAX17048 hibernate), after 5 min 14µA
* With Touch: First 30 seconds deep sleep current is 4.5mA (before driver go to sleep), after 30 seconds 1.55mA
RESETA
1TS003B-1600-3500A
R2
10k
C6
100nF
EN
VIN
D2
BAT60B
D1
R12
100k
R11
10k
Q5
AO3401
D3
BAT60B
Q7
AO3401
R23
100k
SW1A
SSSS811101
VHI
RED
CHRG
R10
330
BATT
J4
USB-C_2-16PIN
R15
5.1k
R16
5.1k
VBUS
D_P
D_N
U1
TP4054
C7
1uF
R5
1k65
0.4A
BATTERY
JST-PH-2/90SMD
F1
SMD0805-050
LDO
HT7833
C4
22uF
C5
4,7uF
C23
22uF
+3V3
F2
SMD0805-050
IC7
AP2191WG-7
C29
22uF
IO2
C24
22uF
IC2
ME6211C33M5G
C25
22uF
IC3
CH9102F
RTS
TXD0
RXD0
DTR
C27
100n
C26
22uF
C28
100n
H1
H2
H3
J2
JST-SH-4_RA
J3
JST-SH-4_VERT
IO22_I2C_SCL
IO21_I2C_SDA
U2
MAX17048
C30
0.1uF
CTG
CELL
VDD
GND
SDA
SCL
QST
ALT
EP
IO21_I2C_SDA
IO22_I2C_SCL
ESPink42_v2_3
19.04.2024 12:27
Sheet: 1/2
Rev: 2.3

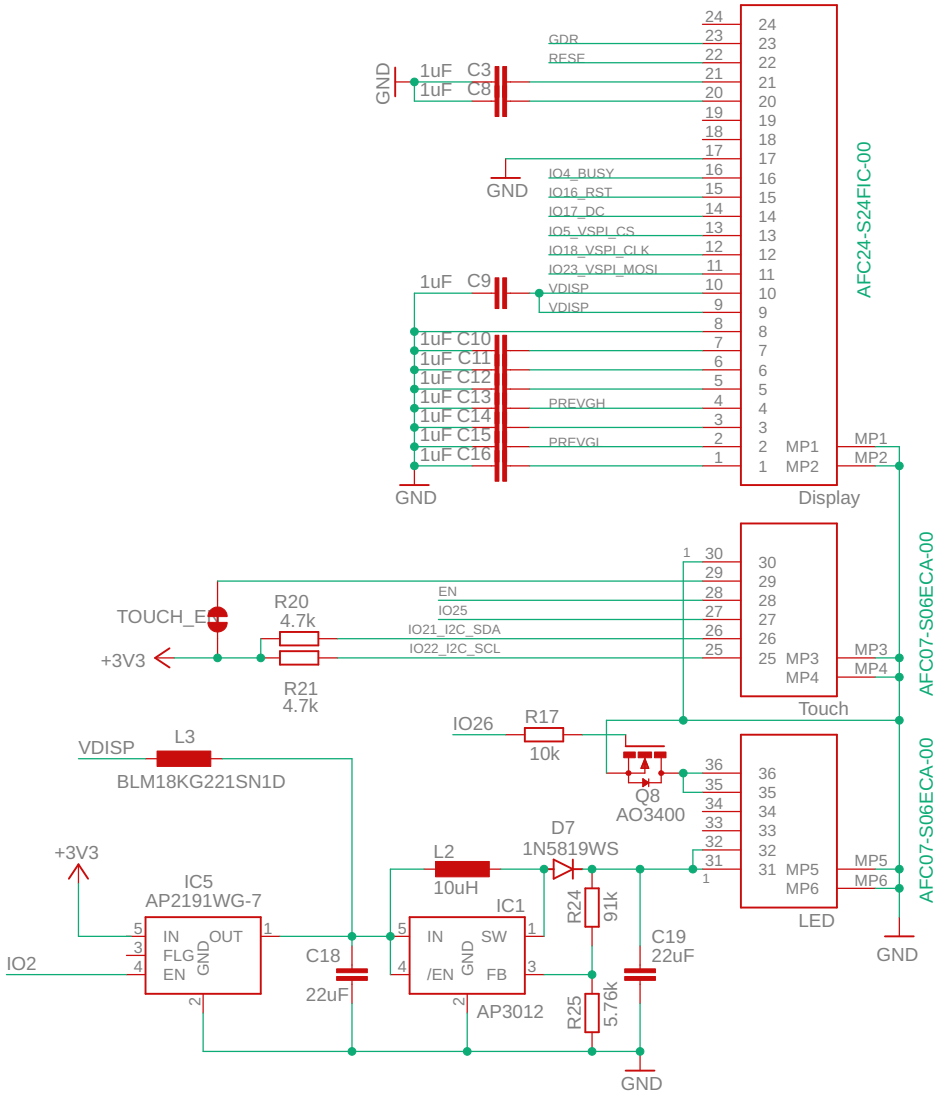

läskakit

CC BY NC SA

ESPink42_v2_3

19.04.2024 12:27

Sheet: 2/2

Rev: 2.3