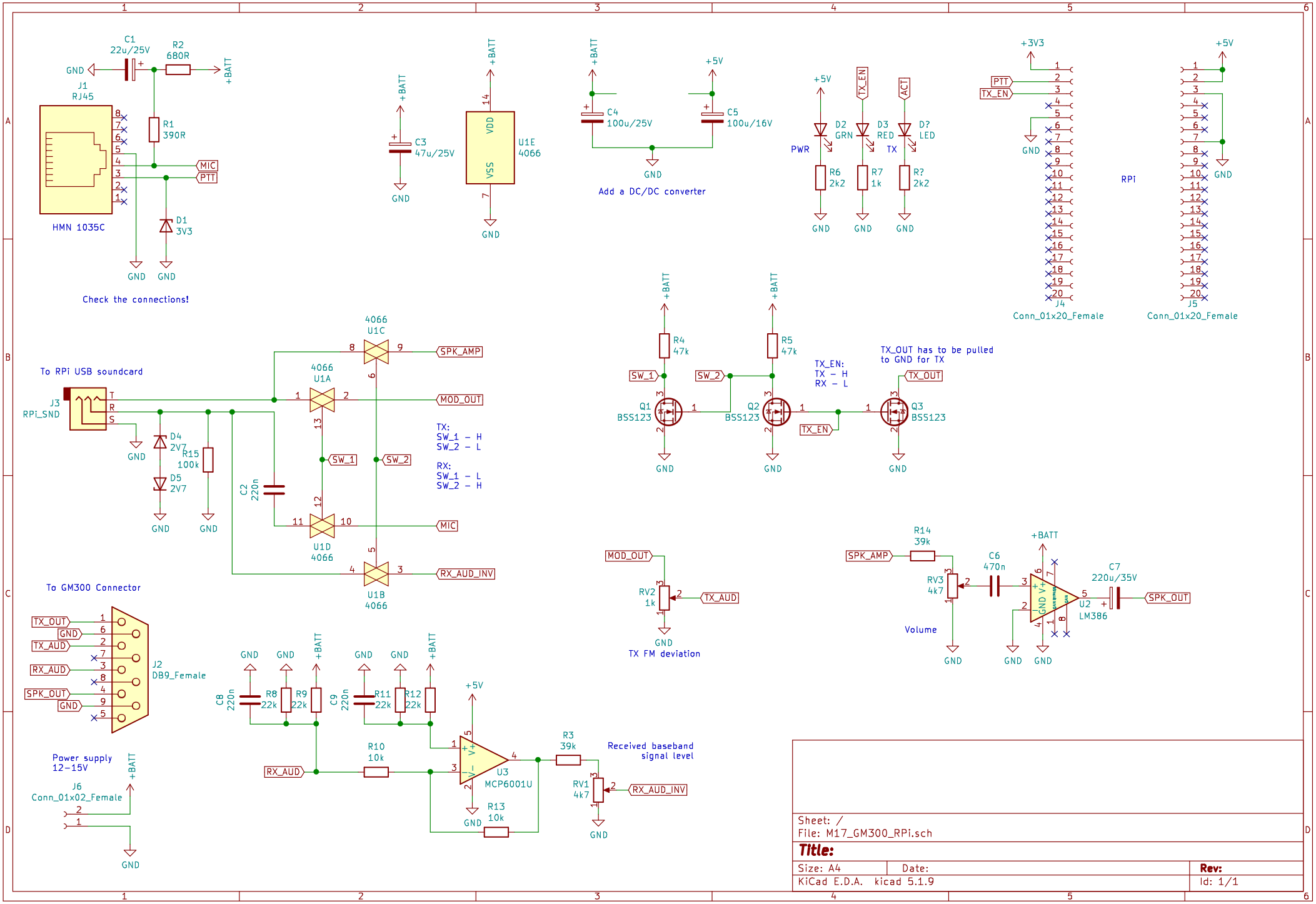

Sheet: /
File: M17_GM300_RPi.sch

Title:

Size: A4	Date:	Rev:
KiCad E.D.A. kicad 5.1.9		Id: 1/1