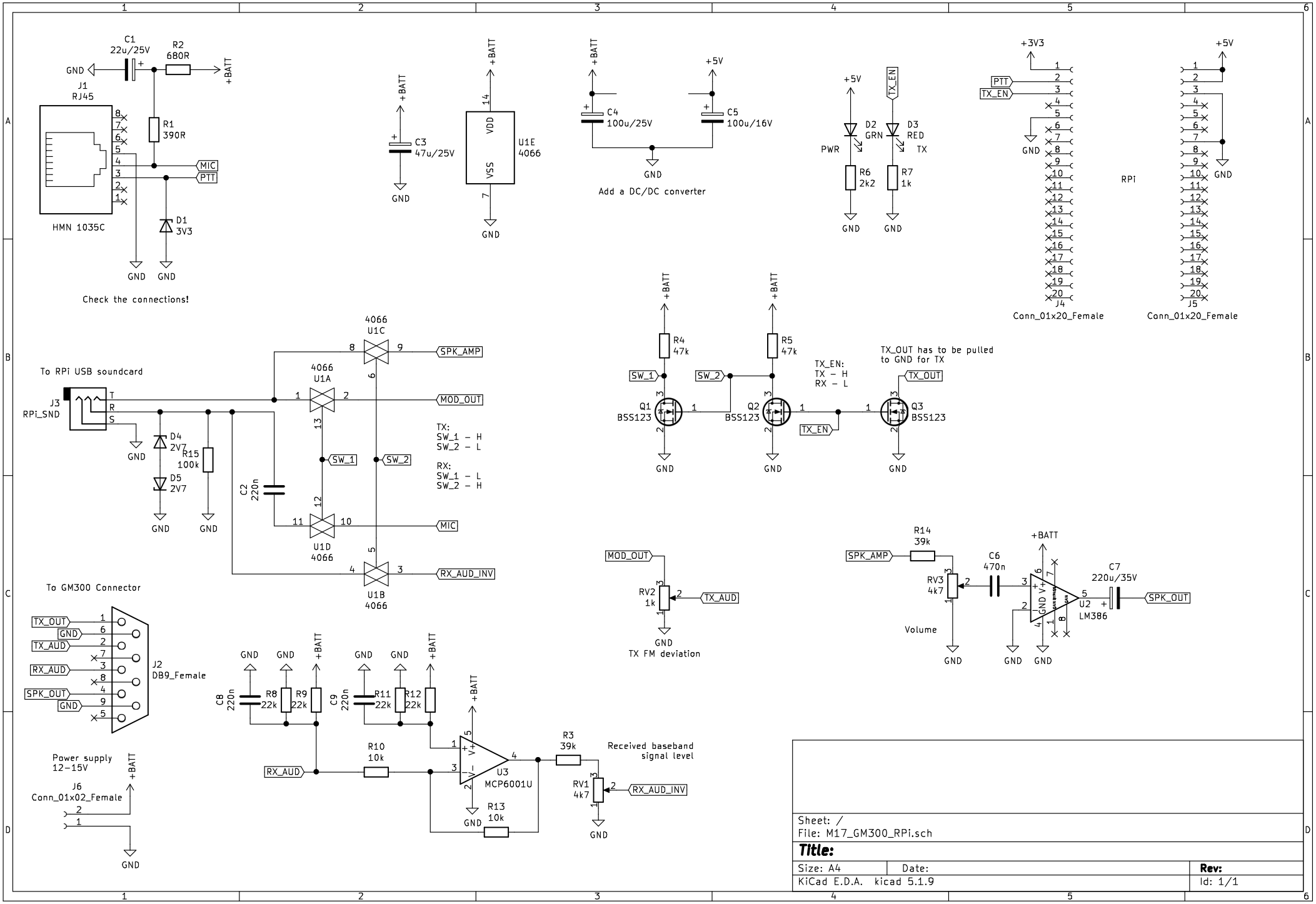
C1
22u/25V
R2
680R
GND
+BATT
J1
RJ45
R1
390R
MIC
PTT
D1
3V3
HMN 1035C
GND GND
Check the connections!
C3
47u/25V
U1E
4066
VDD
VSS
C4
100u/25V
C5
100u/16V
Add a DC/DC converter
+5V
D2
GRN
PWR
D3
RED
TX
TX_EN
R6
2k2
R7
1k
+3V3
PTT
TX_EN
J4
Conn_01x20_Female
RPi
J5
Conn_01x20_Female
To RPi USB soundcard
J3
RPi_SND
T
R
S
D4
2V7
D5
2V7
R15
100k
C2
220n
4066
U1C
4066
U1A
U1D
4066
U1B
4066
SPK_AMP
MOD_OUT
SW_1
SW_2
MIC
RX_AUD_INV
TX:
SW_1 – H
SW_2 – L
RX:
SW_1 – L
SW_2 – H
R4
47k
R5
47k
Q1
BSS123
Q2
BSS123
Q3
BSS123
TX_EN:
TX – H
RX – L
TX_OUT has to be pulled
to GND for TX
TX_OUT
To GM300 Connector
J2
DB9_Female
TX_OUT
GND
TX_AUD
RX_AUD
SPK_OUT
Power supply
12–15V
J6
Conn_01x02_Female
C8
220n
R8
22k
R9
22k
C9
220n
R11
22k
R12
22k
R10
10k
U3
MCP6001U
R13
10k
R3
39k
Received baseband
signal level
RV1
4k7
RV2
1k
TX_AUD
TX FM deviation
R14
39k
RV3
4k7
Volume
C6
470n
U2
LM386
C7
220u/35V
Sheet: /
File: M17_GM300_RPi.sch
Title:
Size: A4
Date:
Rev:
KiCad E.D.A. kicad 5.1.9
Id: 1/1