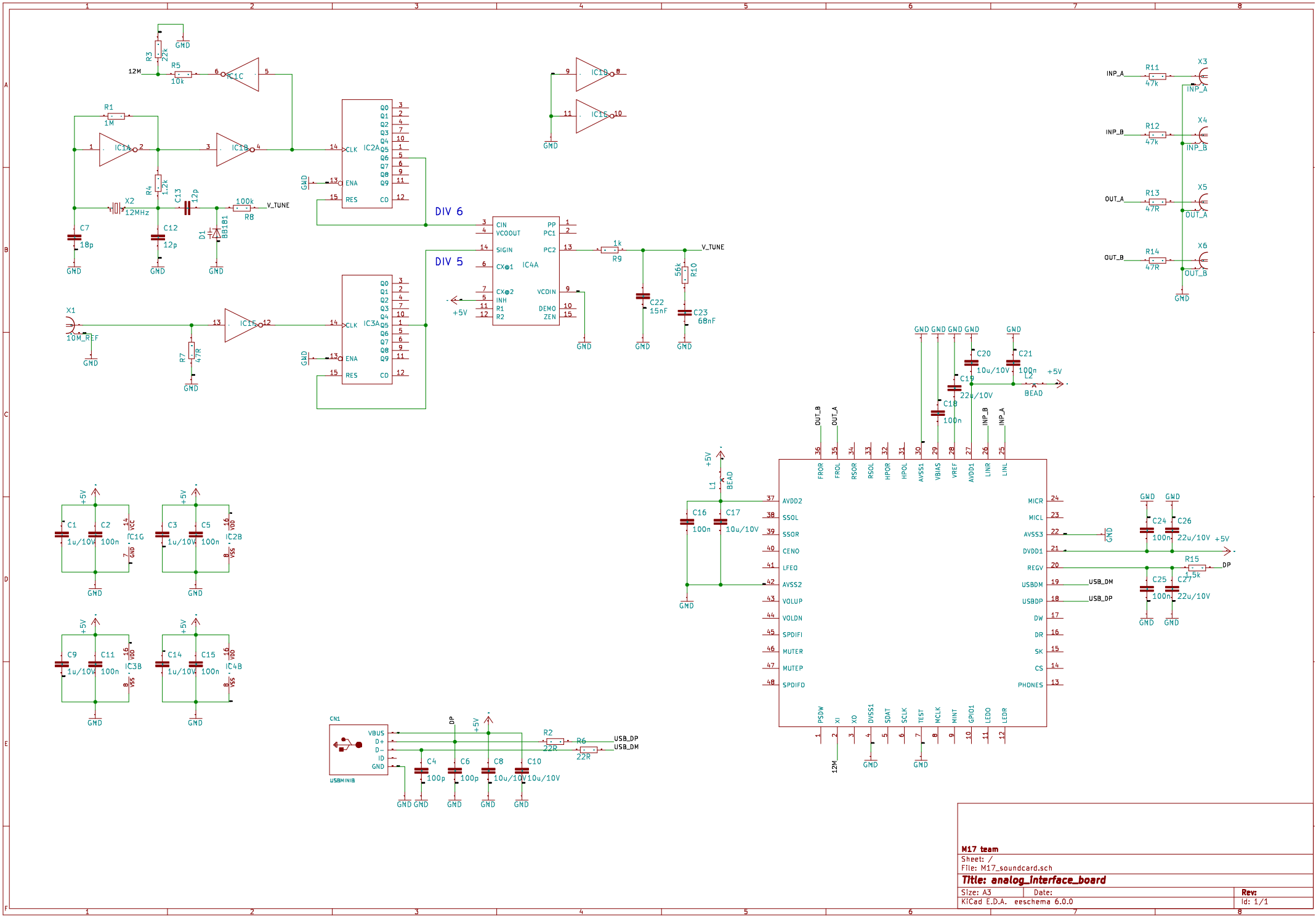

M17 team
Sheet: /
File: M17_soundcard.sch
Title: analog_interface_board
Size: A3 Date: Rev:
KiCad E.D.A. eeschema 6.0.0 Id: 1/1