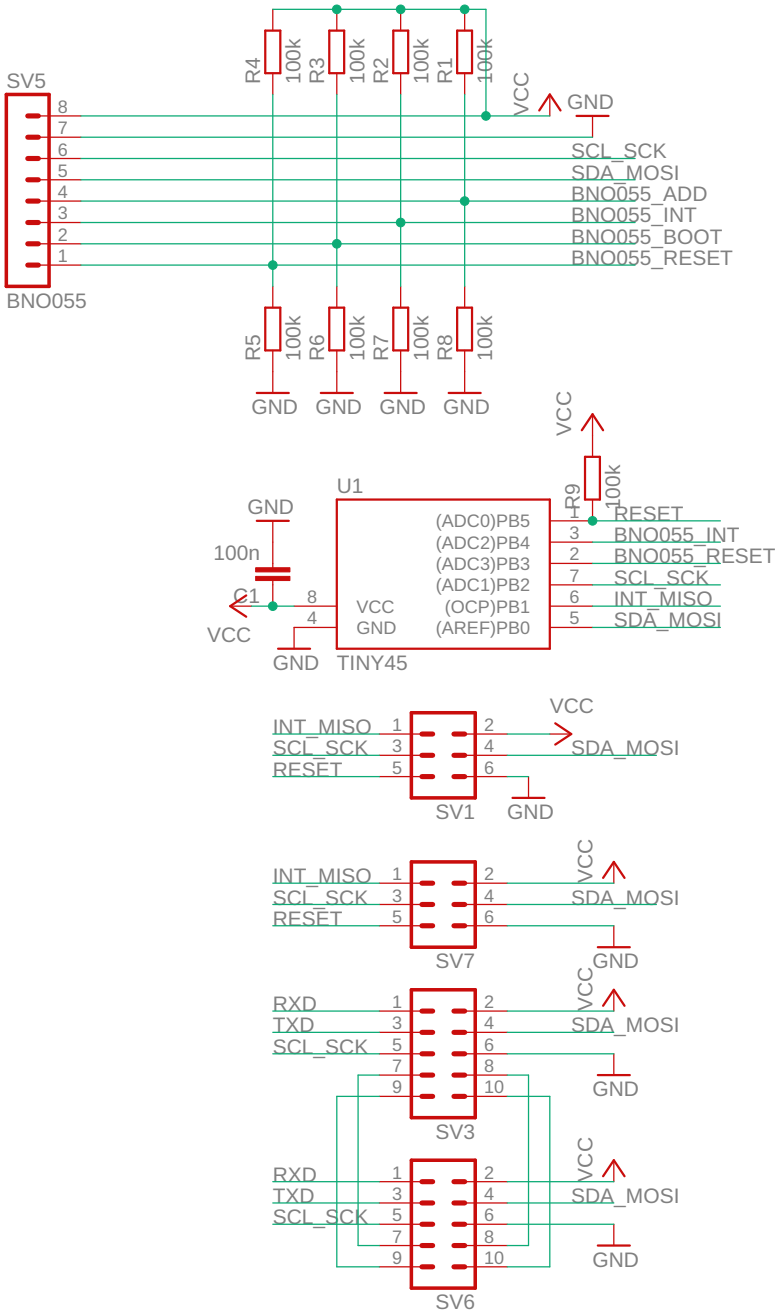

TITLE: spi_node	
Document Number:	REV:
Date: 7/7/20 6:42 PM	Sheet: 1/1