Foxconn-T77H497.00

M2M Module with 802.11b/g/n WiFi

Revision History

Rev	Date	Description	Author
005			
015	2013/5/14	1.change U1 GPIO_0 to floating	Gary
015	2013/5/30	1.delete U7 2.add PC0 and PC1 to host, delete RF0/RF1 3.change U5 to LQFN64 package 4.add 32.768K crystal for sleep clock 5.Change U5.PA2 netname to PA2_TX2 Change net[PowerDown] from PA2 to PC1	Gary

Block Diagram

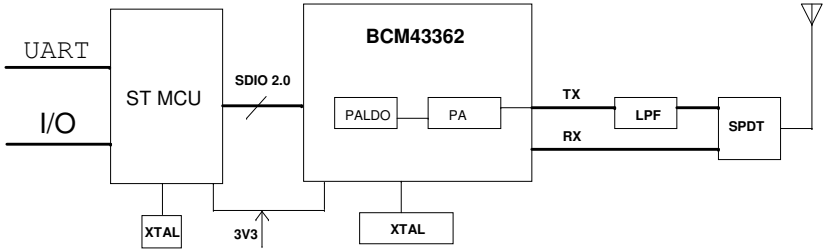

FOXCONN-CPEI-RD			
Title: T77H497.00 - Title page			
Size: C	Document Number: 1		Rev: 035
Date: Thursday, June 06, 2013	Sheet 1 of 3		

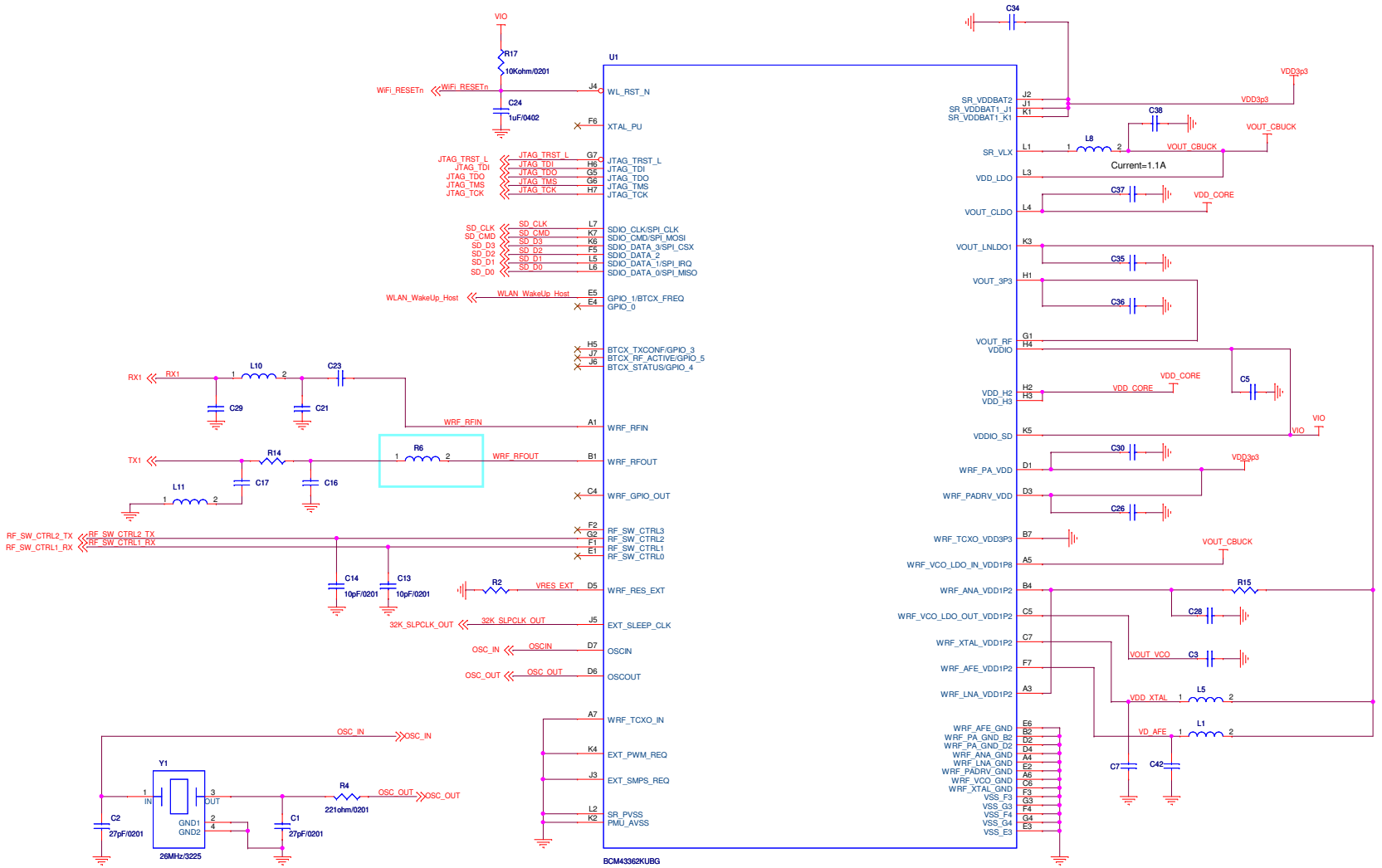

FOXCONN-CNSBG-CPEI-RD		
Title: T77H497.00 - Baseband		
Size: C	Document Number: 2	Rev: 035
Date: Thursday, June 06, 2013	Sheet 2 of 3	

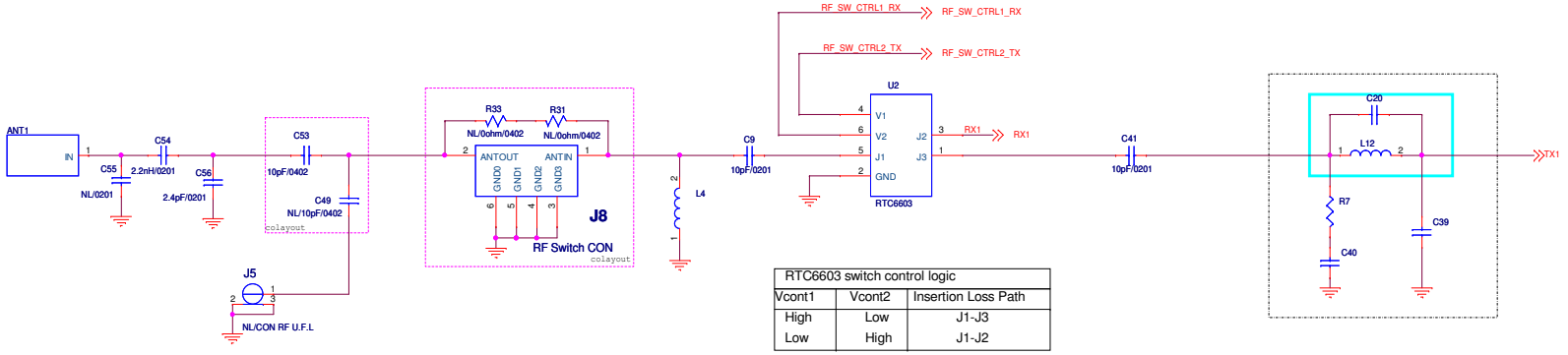

RTC6603 switch control logic		
Vcont1	Vcont2	Insertion Loss Path
High	Low	J1-J3
Low	High	J1-J2

FOXCONN-CNSBG-CPEI-RD		
Title: T77H497.00 - RF and Host interface		
Size: C	Document Number: 3	Rev: 035
Date: Thursday, June 06, 2013	Sheet 3 of 3	

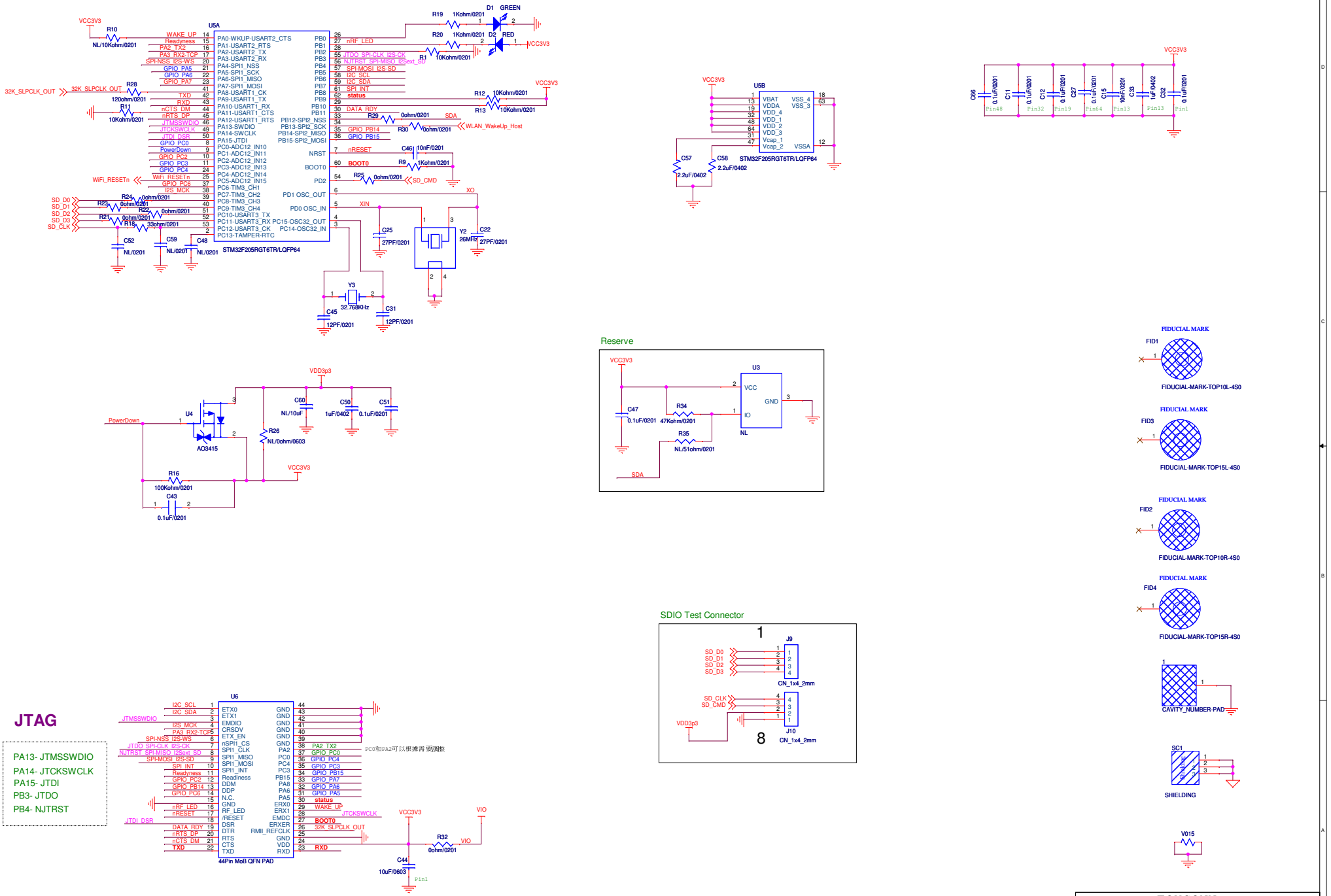

FOXCONN

Title	STM32F	
Size C	Document Number T77H497.00 M2M Module	Rev 1.0
Date: Thursday, June 06, 2013	Sheet 3 of 3	