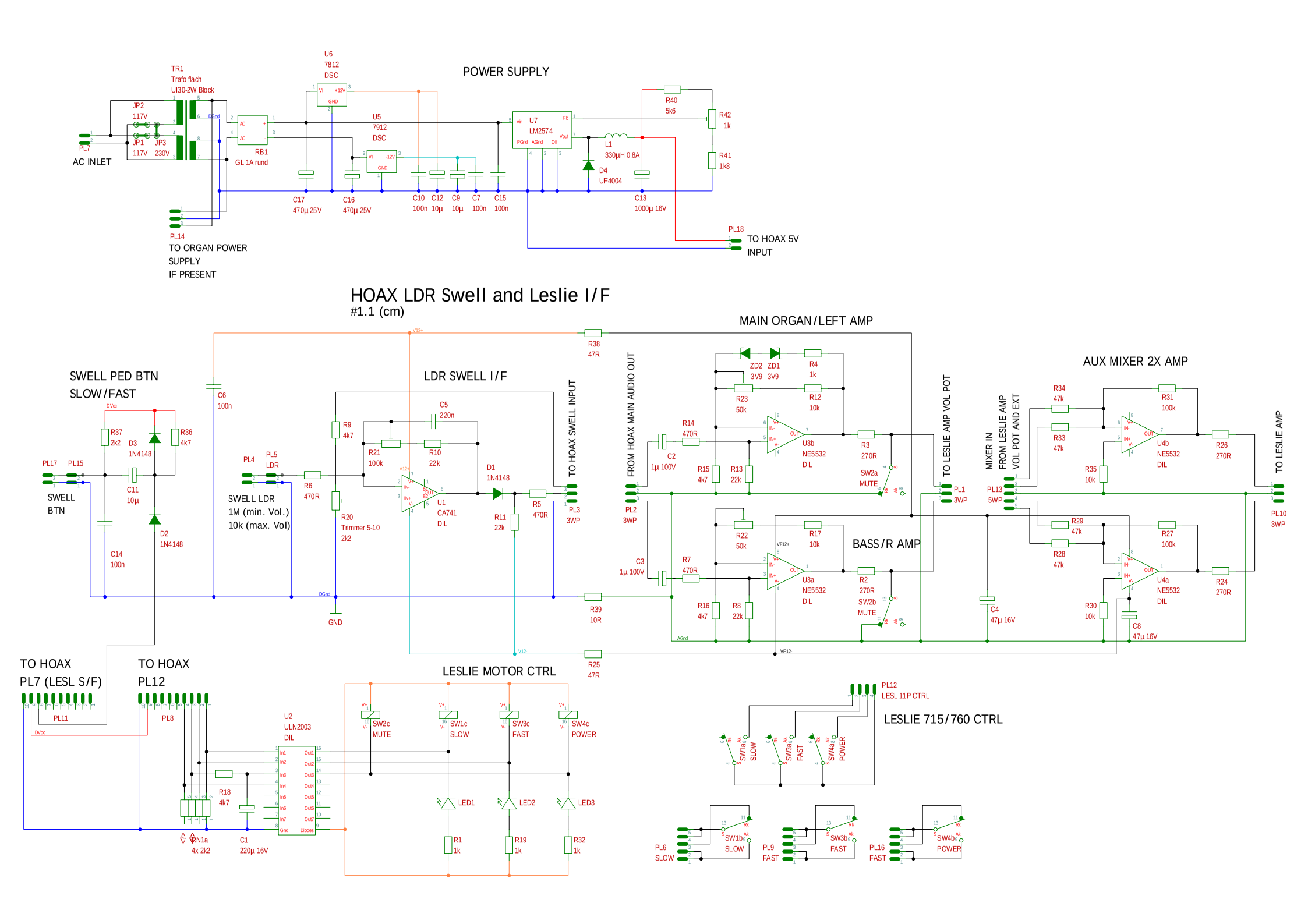
POWER SUPPLY
TR1
Trafo flach
UI30-2W Block
JP2
117V
JP1
117V
JP3
230V
PL7
AC INLET
RB1
GL 1A rund
U6
7812
DSC
U5
7912
DSC
U7
LM2574
L1
330µH 0,8A
D4
UF4004
R40
5k6
R42
1k
R41
1k8
C17
470µ 25V
C16
470µ 25V
C10
100n
C12
10µ
C9
10µ
C7
100n
C15
100n
C13
1000µ 16V
PL14
TO ORGAN POWER
SUPPLY
IF PRESENT
PL18
TO HOAX 5V
INPUT
HOAX LDR Swell and Leslie I/F
#1.1 (cm)
SWELL PED BTN
SLOW/FAST
PL17
PL15
SWELL
BTN
R37
2k2
D3
1N4148
R36
4k7
C11
10µ
D2
1N4148
C14
100n
C6
100n
PL4
PL5
LDR
SWELL LDR
1M (min. Vol.)
10k (max. Vol)
R6
470R
R9
4k7
R20
Trimmer 5-10
2k2
LDR SWELL I/F
C5
220n
R21
100k
R10
22k
U1
CA741
DIL
D1
1N4148
R11
22k
R5
470R
TO HOAX SWELL INPUT
PL3
3WP
GND
R38
47R
R39
10R
R25
47R
MAIN ORGAN/LEFT AMP
FROM HOAX MAIN AUDIO OUT
PL2
3WP
C2
1µ 100V
C3
1µ 100V
R14
470R
R7
470R
ZD2
3V9
ZD1
3V9
R4
1k
R23
50k
R12
10k
R15
4k7
R13
22k
U3b
NE5532
DIL
R3
270R
SW2a
MUTE
R22
50k
R17
10k
R16
4k7
R8
22k
U3a
NE5532
DIL
R2
270R
SW2b
MUTE
BASS/R AMP
TO LESLIE AMP VOL POT
PL1
3WP
AUX MIXER 2X AMP
MIXER IN
FROM LESLIE AMP
VOL POT AND EXT
PL13
5WP
R34
47k
R33
47k
R31
100k
R35
10k
U4b
NE5532
DIL
R26
270R
R29
47k
R28
47k
R27
100k
R30
10k
U4a
NE5532
DIL
R24
270R
C4
47µ 16V
C8
47µ 16V
TO LESLIE AMP
PL10
3WP
TO HOAX
PL7 (LESL S/F)
PL11
TO HOAX
PL12
PL8
RN1a
4x 2k2
R18
4k7
C1
220µ 16V
U2
ULN2003
DIL
LESLIE MOTOR CTRL
SW2c
MUTE
SW1c
SLOW
SW3c
FAST
SW4c
POWER
LED1
LED2
LED3
R1
1k
R19
1k
R32
1k
PL12
LESL 11P CTRL
LESLIE 715/760 CTRL
SW1a
SLOW
SW3a
FAST
SW4a
POWER
PL6
SLOW
SW1b
SLOW
PL9
FAST
SW3b
FAST
PL16
FAST
SW4b
POWER