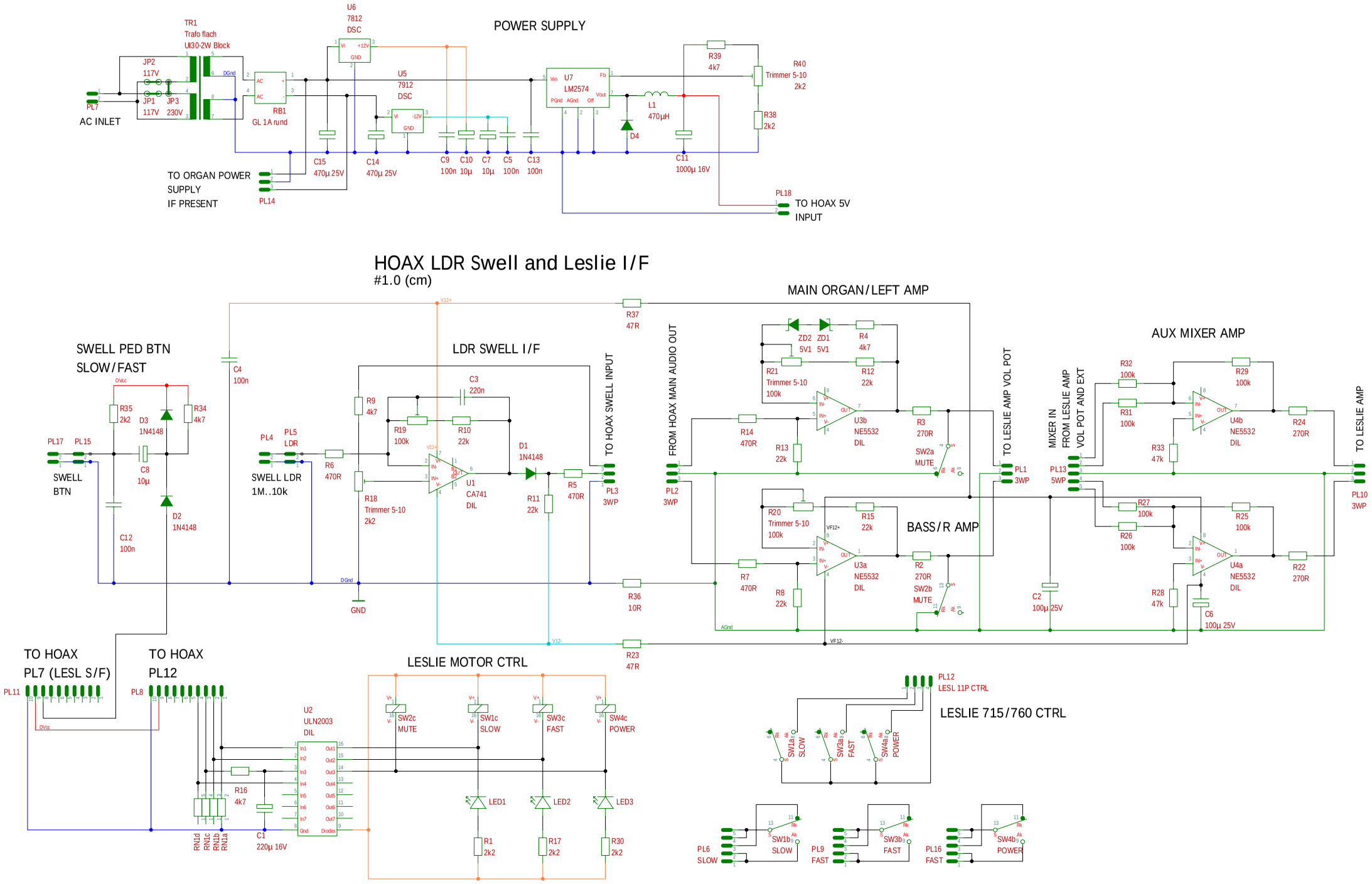
POWER SUPPLY
TR1
Trafo flach
UI30-2W Block
JP2
117V
JP1
117V
JP3
230V
PL7
AC INLET
RB1
GL 1A rund
U6
7812
DSC
U5
7912
DSC
C15
470µ 25V
C14
470µ 25V
C9
100n
C10
10µ
C7
10µ
C5
100n
C13
100n
U7
LM2574
L1
470µH
D4
C11
1000µ 16V
R39
4k7
R40
Trimmer 5-10
2k2
R38
2k2
TO ORGAN POWER
SUPPLY
IF PRESENT
PL14
PL18
TO HOAX 5V
INPUT
HOAX LDR Swell and Leslie I/F
#1.0 (cm)
SWELL PED BTN
SLOW/FAST
PL17
PL15
SWELL
BTN
R35
2k2
D3
1N4148
R34
4k7
C8
10µ
D2
1N4148
C12
100n
C4
100n
PL4
PL5
LDR
SWELL LDR
1M..10k
R6
470R
LDR SWELL I/F
R9
4k7
R19
100k
C3
220n
R10
22k
R18
Trimmer 5-10
2k2
U1
CA741
DIL
D1
1N4148
R11
22k
R5
470R
TO HOAX SWELL INPUT
PL3
3WP
GND
R37
47R
R36
10R
R23
47R
FROM HOAX MAIN AUDIO OUT
PL2
3WP
MAIN ORGAN/LEFT AMP
ZD2
5V1
ZD1
5V1
R4
4k7
R21
Trimmer 5-10
100k
R12
22k
R14
470R
R13
22k
U3b
NE5532
DIL
R3
270R
SW2a
MUTE
R20
Trimmer 5-10
100k
R15
22k
BASS/R AMP
R7
470R
R8
22k
U3a
NE5532
DIL
R2
270R
SW2b
MUTE
TO LESLIE AMP VOL POT
PL1
3WP
C2
100µ 25V
MIXER IN
FROM LESLIE AMP
VOL POT AND EXT
PL13
5WP
AUX MIXER AMP
R32
100k
R31
100k
R29
100k
R33
47k
U4b
NE5532
DIL
R24
270R
R27
100k
R26
100k
R25
100k
R28
47k
U4a
NE5532
DIL
R22
270R
C6
100µ 25V
TO LESLIE AMP
PL10
3WP
TO HOAX
PL7 (LESL S/F)
PL11
TO HOAX
PL12
PL8
U2
ULN2003
DIL
R16
4k7
C1
220µ 16V
RN1d
RN1c
RN1b
RN1a
LESLIE MOTOR CTRL
SW2c
MUTE
SW1c
SLOW
SW3c
FAST
SW4c
POWER
LED1
LED2
LED3
R1
2k2
R17
2k2
R30
2k2
PL12
LESL 11P CTRL
LESLIE 715/760 CTRL
SW1a
SLOW
SW3a
FAST
SW4a
POWER
PL6
SLOW
SW1b
SLOW
PL9
FAST
SW3b
FAST
PL16
FAST
SW4b
POWER