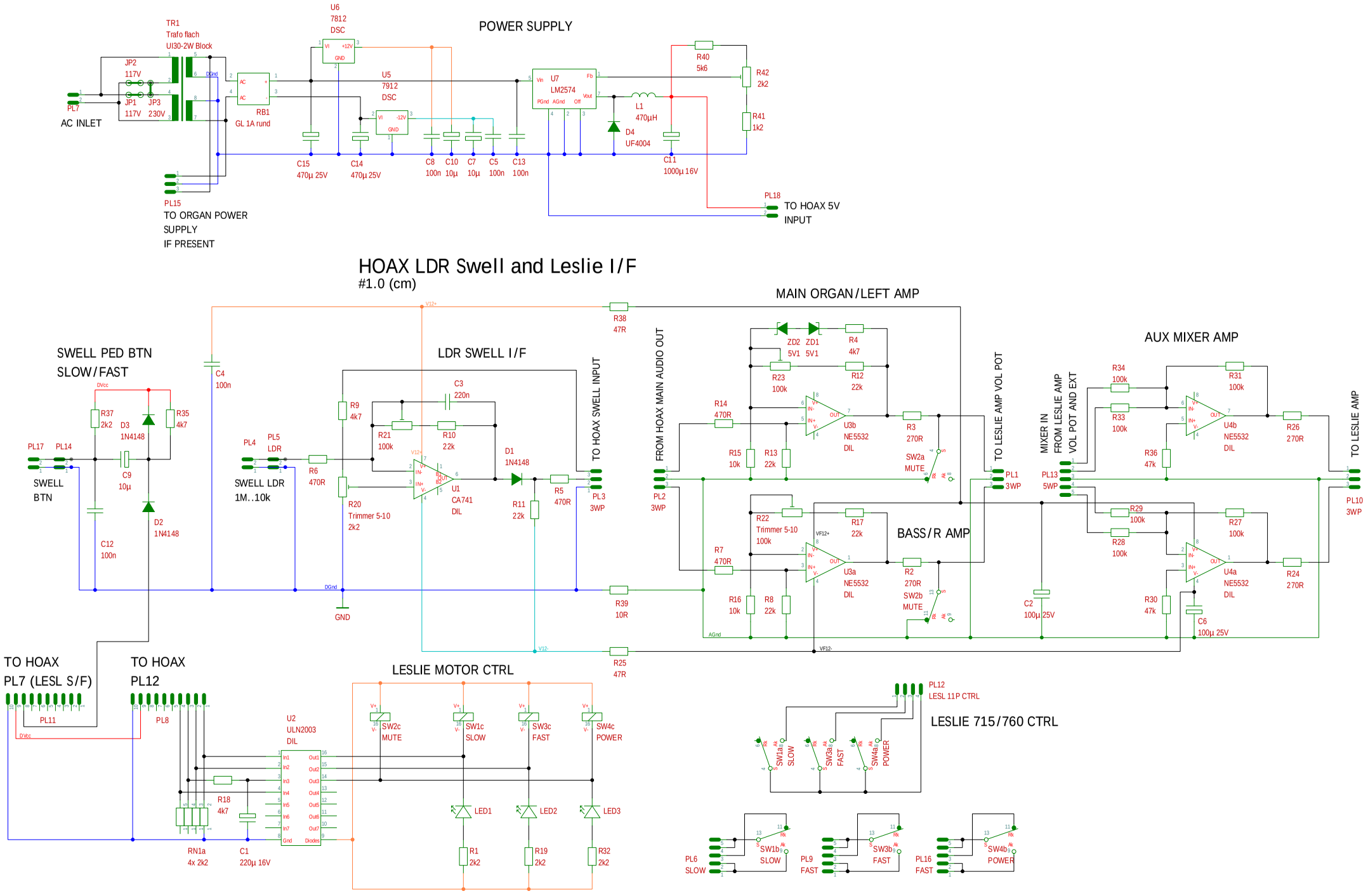
POWER SUPPLY
TR1
Trafo flach
UI30-2W Block
JP2
117V
JP1
117V
JP3
230V
PL7
AC INLET
RB1
GL 1A rund
U6
7812
DSC
U5
7912
DSC
U7
LM2574
L1
470µH
D4
UF4004
R40
5k6
R42
2k2
R41
1k2
C15
470µ 25V
C14
470µ 25V
C8
100n
C10
10µ
C7
10µ
C5
100n
C13
100n
C11
1000µ 16V
PL15
TO ORGAN POWER
SUPPLY
IF PRESENT
PL18
TO HOAX 5V
INPUT
HOAX LDR Swell and Leslie I/F
#1.0 (cm)
MAIN ORGAN/LEFT AMP
SWELL PED BTN
SLOW/FAST
LDR SWELL I/F
TO HOAX SWELL INPUT
FROM HOAX MAIN AUDIO OUT
TO LESLIE AMP VOL POT
AUX MIXER AMP
MIXER IN
FROM LESLIE AMP
VOL POT AND EXT
TO LESLIE AMP
R38
47R
C4
100n
R37
2k2
D3
1N4148
R35
4k7
PL17
PL14
C9
10µ
SWELL
BTN
C12
100n
D2
1N4148
PL4
PL5
LDR
SWELL LDR
1M..10k
R6
470R
R9
4k7
R21
100k
C3
220n
R10
22k
R20
Trimmer 5-10
2k2
U1
CA741
DIL
D1
1N4148
R11
22k
R5
470R
PL3
3WP
GND
R39
10R
R25
47R
ZD2
5V1
ZD1
5V1
R4
4k7
R23
100k
R12
22k
R14
470R
R15
10k
R13
22k
U3b
NE5532
DIL
R3
270R
SW2a
MUTE
PL2
3WP
R22
Trimmer 5-10
100k
R17
22k
R7
470R
R16
10k
R8
22k
U3a
NE5532
DIL
R2
270R
SW2b
MUTE
BASS/R AMP
PL1
3WP
C2
100µ 25V
PL13
5WP
R34
100k
R33
100k
R36
47k
R31
100k
U4b
NE5532
DIL
R26
270R
R29
100k
R28
100k
R30
47k
R27
100k
U4a
NE5532
DIL
R24
270R
C6
100µ 25V
PL10
3WP
TO HOAX
PL7 (LESL S/F)
PL11
TO HOAX
PL12
PL8
U2
ULN2003
DIL
RN1a
4x 2k2
R18
4k7
C1
220µ 16V
LESLIE MOTOR CTRL
SW2c
MUTE
SW1c
SLOW
SW3c
FAST
SW4c
POWER
LED1
LED2
LED3
R1
2k2
R19
2k2
R32
2k2
PL12
LESL 11P CTRL
LESLIE 715/760 CTRL
SW1a
SLOW
SW3a
FAST
SW4a
POWER
PL6
SLOW
SW1b
SLOW
PL9
FAST
SW3b
FAST
PL16
FAST
SW4b
POWER