Arduino(TM) UNO Rev3

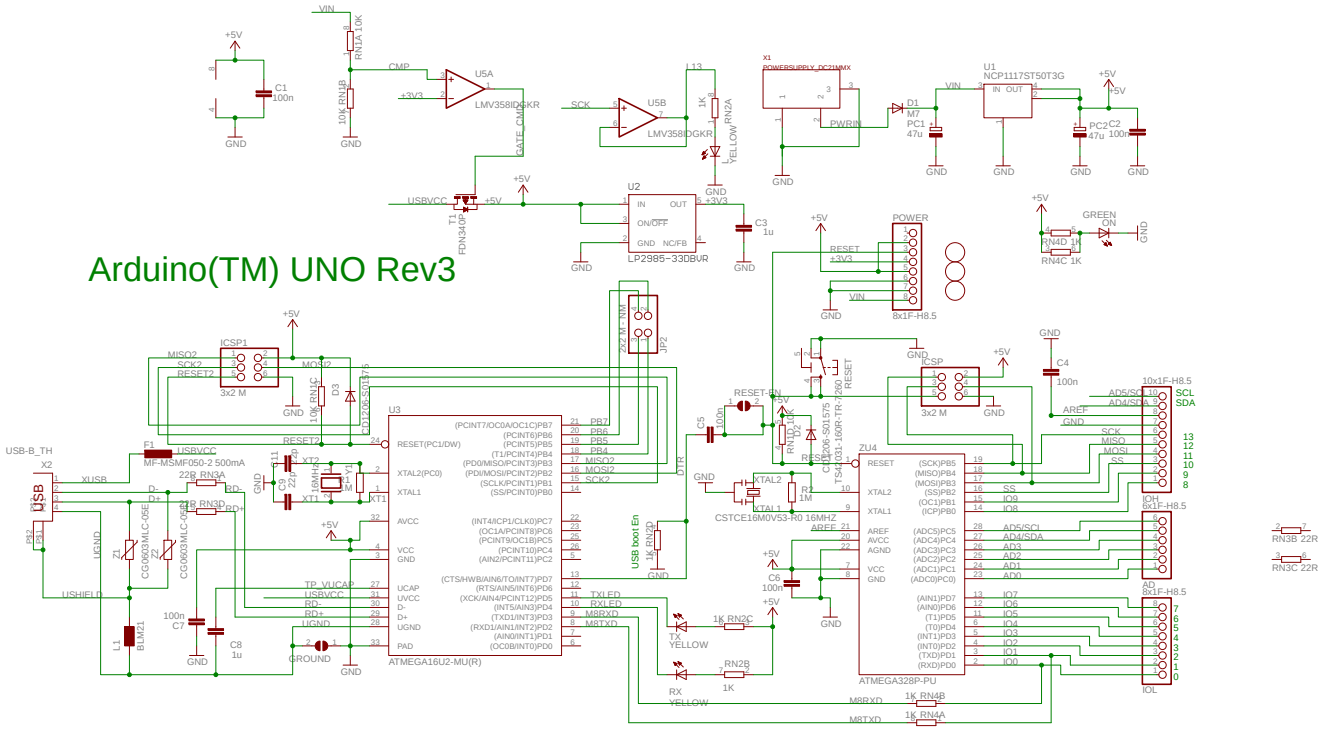

Use of the ARDUINO name must be compliant with http://www.arduino.cc/en/Main/Policy