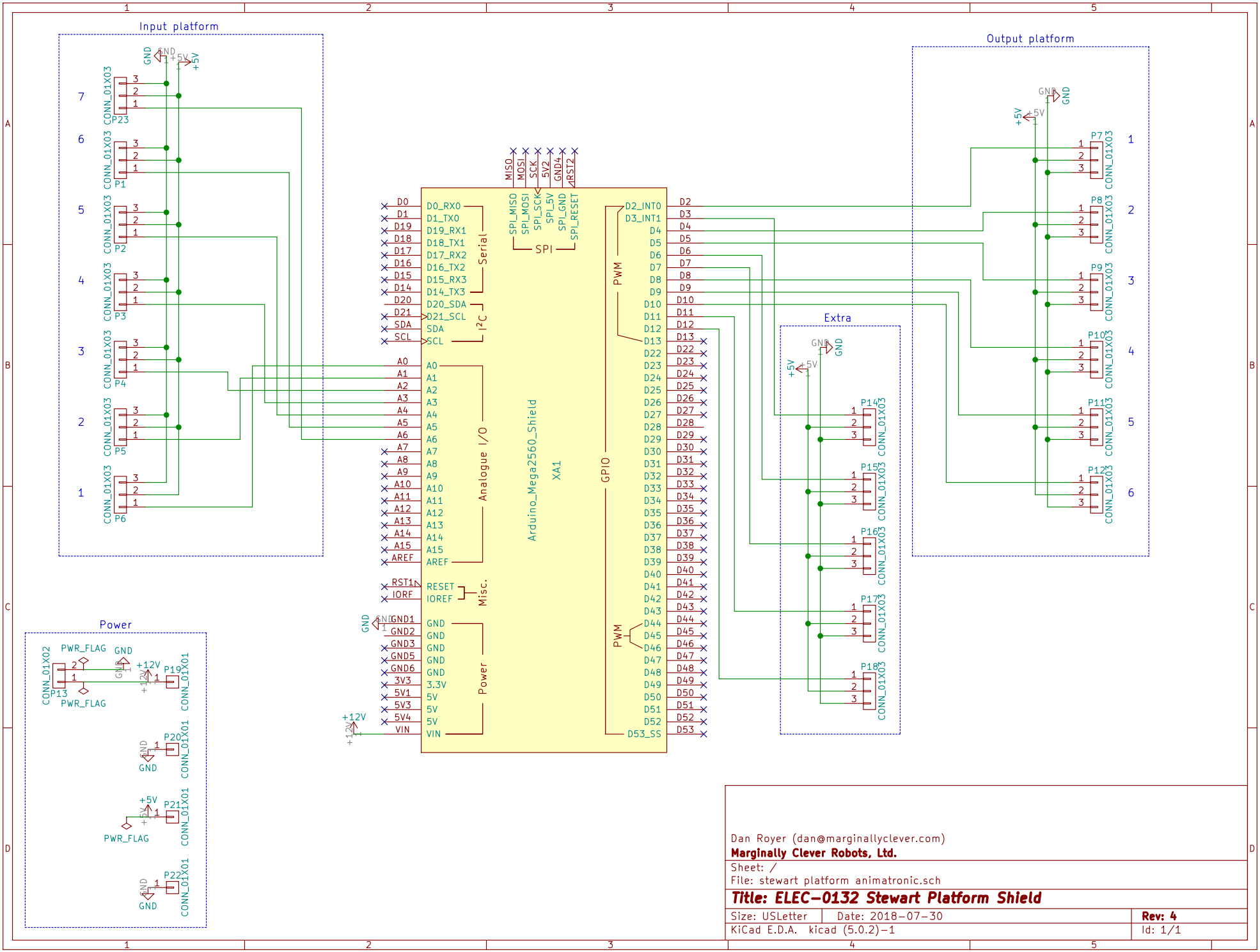

Dan Royer (dan@marginallyclever.com)
Marginally Clever Robots, Ltd.

Sheet: /
File: stewart platform animatronic.sch

Title: ELEC-0132 Stewart Platform Shield

Size: USLetter	Date: 2018-07-30	**Rev: 4**
KiCad E.D.A. kicad (5.0.2)-1		Id: 1/1