Sobi electrical components

Diagram name:

Machine:

Electrical data

Electrical supply data	
Battery charger	TriCom FUTUR mini E24/10
Mains	230 VAC @ 50 Hz
Internal energy supply	
Battery voltage (min./nom./max.)	22V / 24V / 29V
Battery capacity	75 Ah
Uoltage (platform drives)	24V (battery)
Uoltage (manipulator)	
Uoltage (auxiliary axes)	
Auxiliary voltages	5V, 12V

Content

Description	Pages
LED STRIPS HEAD, Raspberry Pi, SERVO_R, SERVO_L, LED PANEL	2
NF Filter, TPA3116, FRS8, S W I T C H, LED STRIPS ARMS, DC1, JETSON NANO	3
Power Supply, CONVERTER BASE	4
EVS Computer, ARDUINO MEGA	5
CONVERTER	6
LED PANEL	7
SERVO_R, SERVO_L	8
JETSON NANO, Raspberry Pi	9
ODRIVE, TPA 3116, SWITCH, DC1, CONVERTER MAIN	10
Bill of materials	11

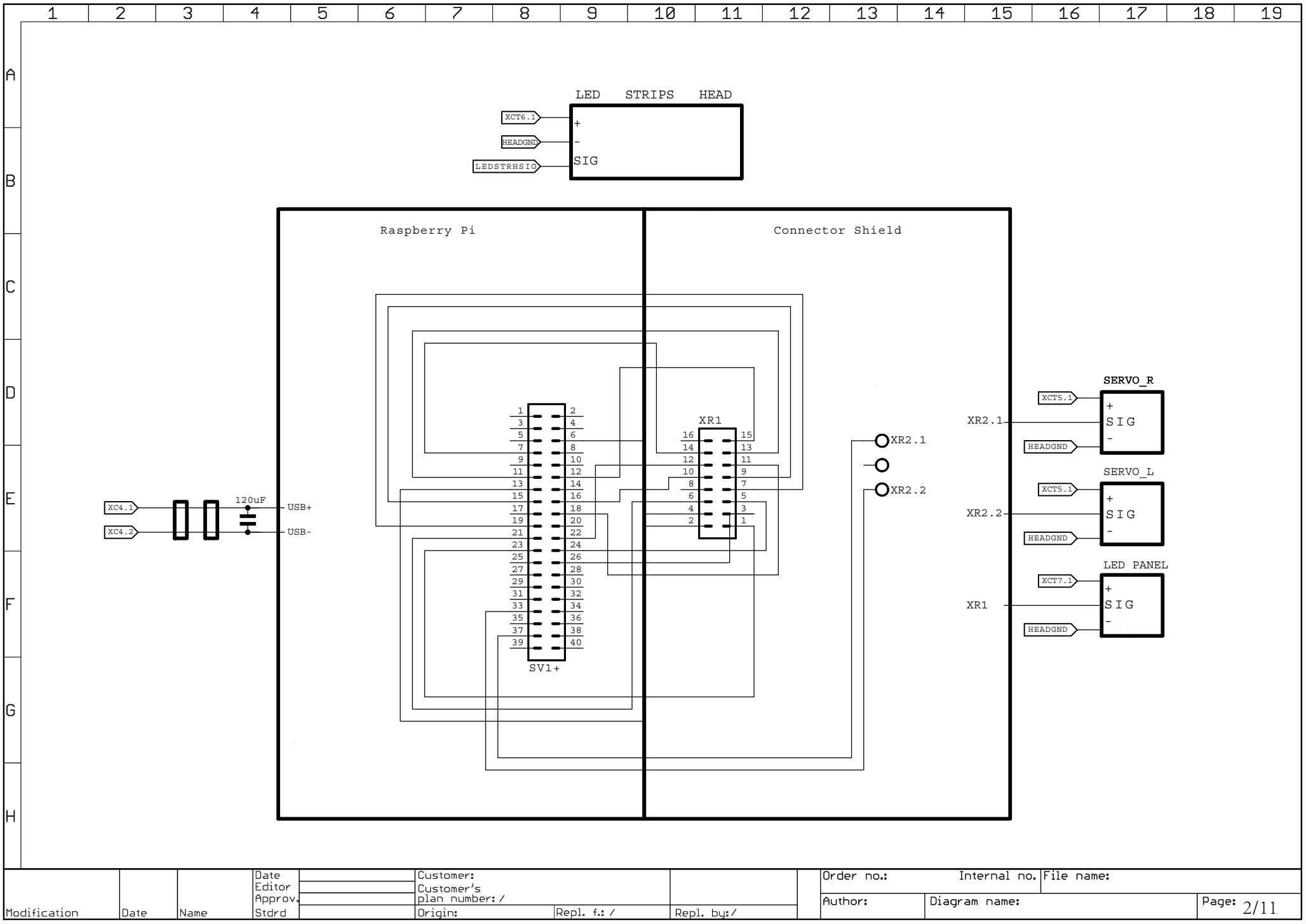

Modification	Date	Name	Date		Customer:		
			Editor		Customer's plan number: /		
			Approv.				
			Stdrd		Origin:	Repl. f.: /	Repl. by:/

Order no.:	Internal no.	File name:	
Author:	Diagram name:		Page: 2/11

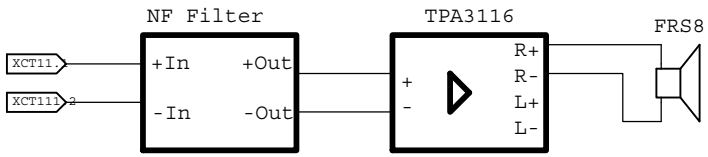

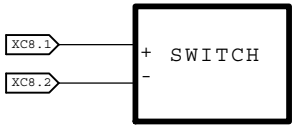

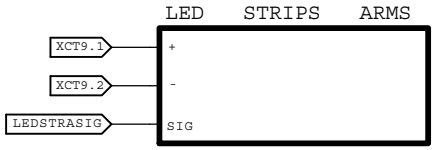

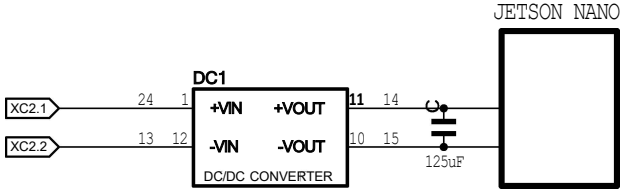

Modification	Date	Name	Date		Customer:			Order no.:	Internal no.	File name:
			Editor		Customer's plan number: /					
			Approv.					Author:	Diagram name:	Page: 3/11
			Stdrd		Origin:	Repl. f.: /	Repl. by:/			

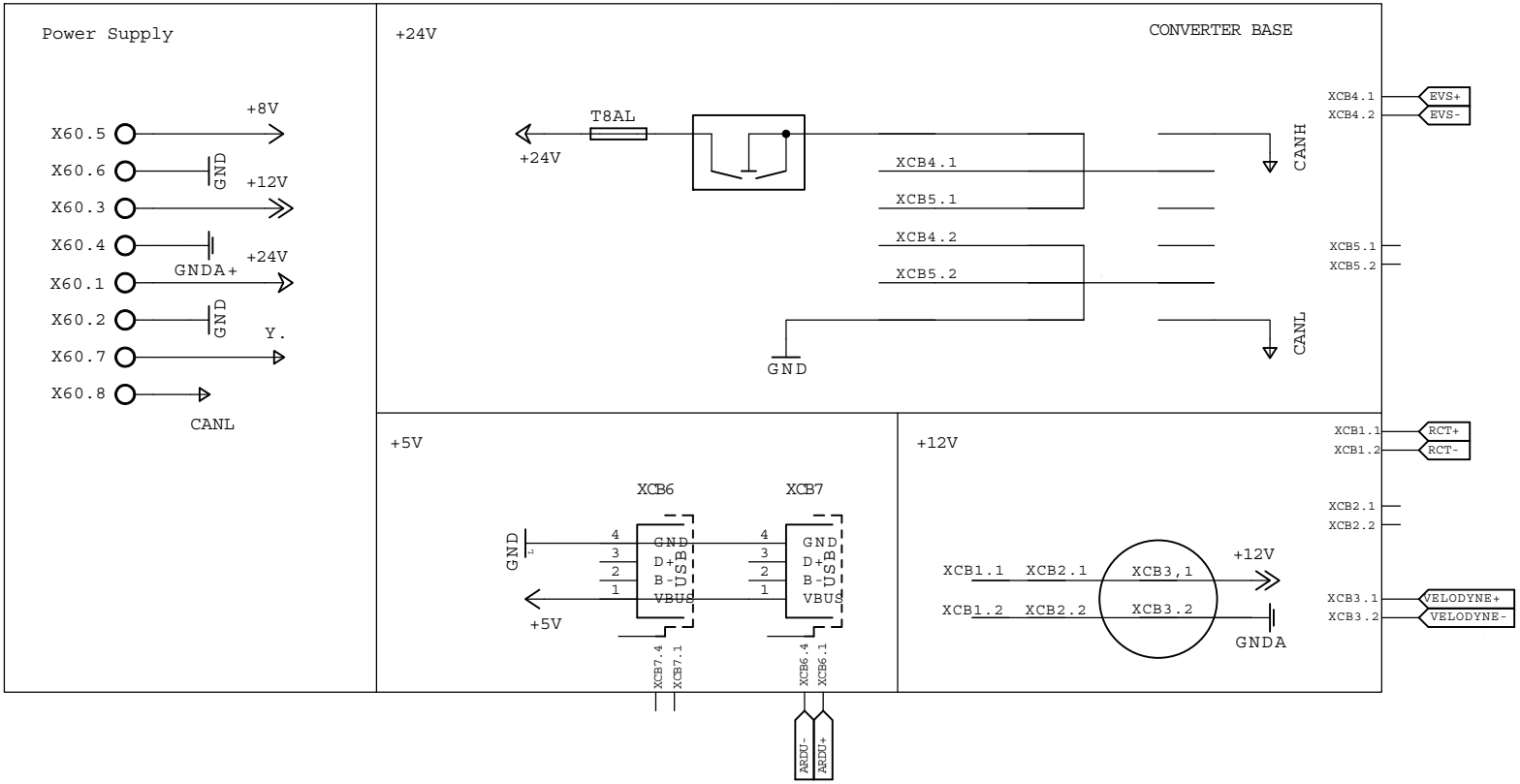

Modification	Date	Name	Date		Customer:			Order no.:	Internal no.	File name:
			Editor		Customer's plan number: /					
			Approv.					Author:	Diagram name:	Page: 4/11
			Stdrd		Origin:	Repl. f.: /	Repl. by:/			

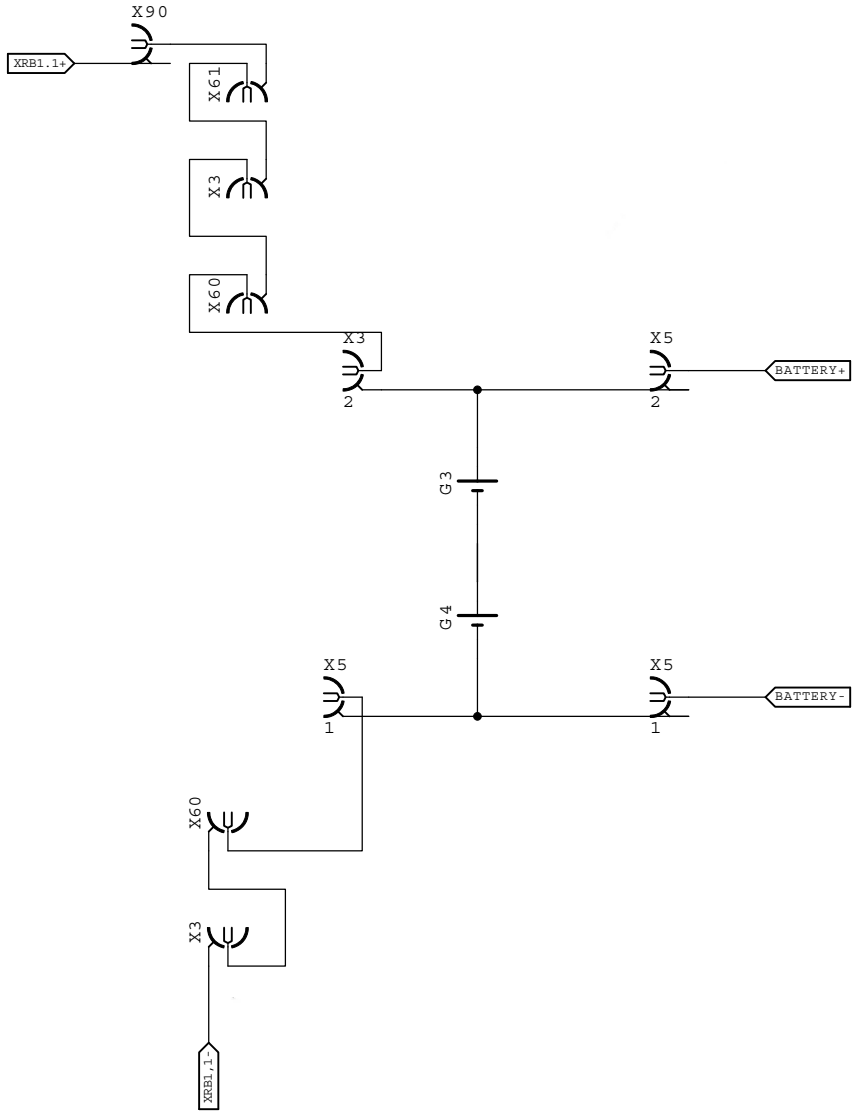

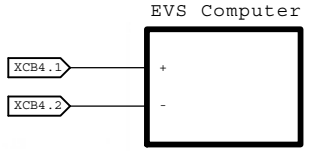

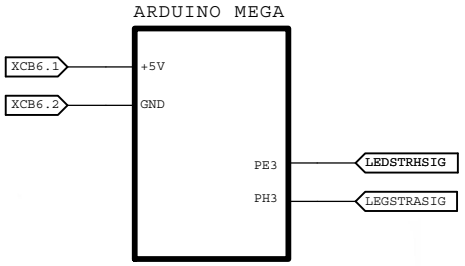

Modification	Date	Name	Date		Customer:		Repl. by:/	Order no.:	Internal no.	File name:	
			Editor		Customer's plan number: /			Author:	Diagram name:		Page: 5/11
			Approv.								
			Stdrd		Origin:	Repl. f.: /					

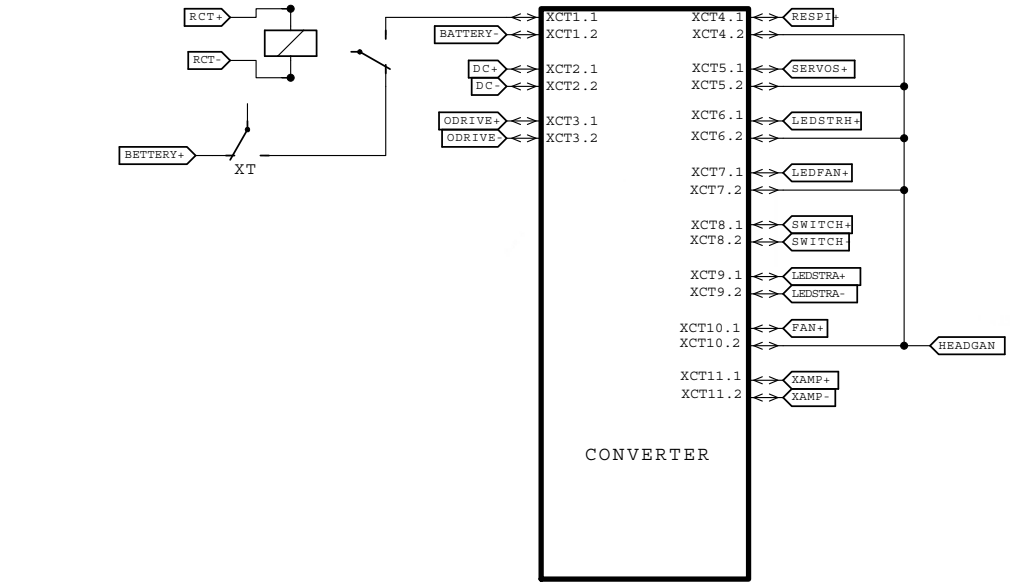

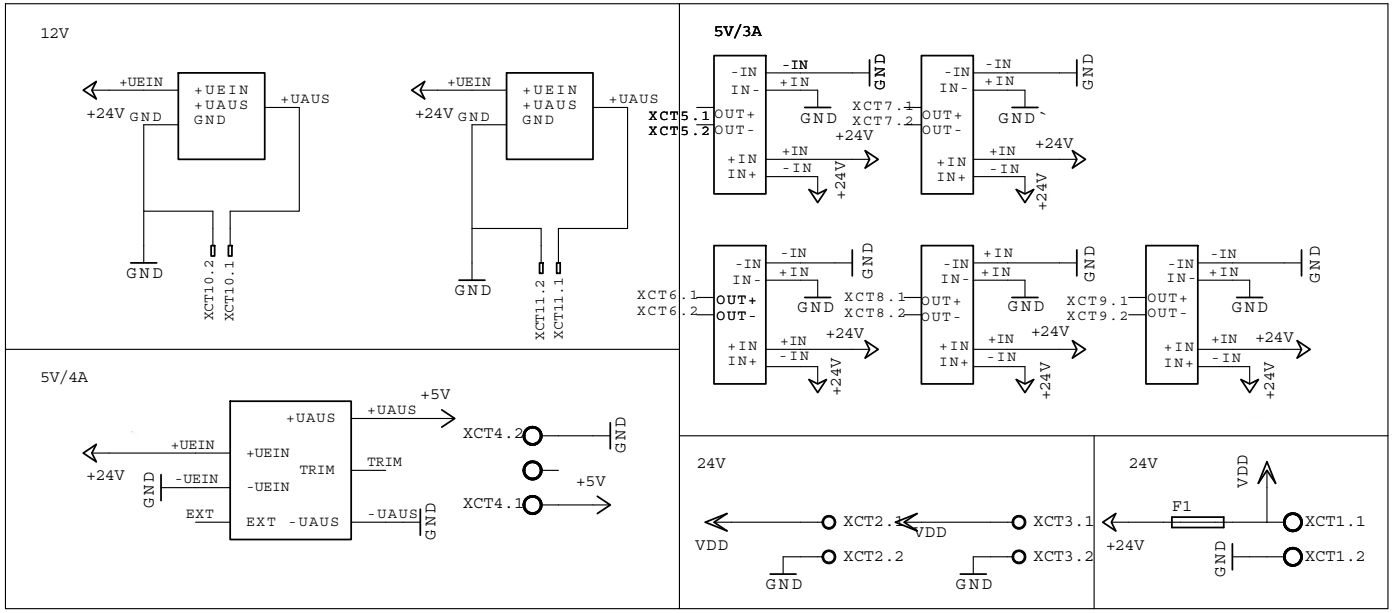

Modification	Date	Name	Date		Customer:		
			Editor		Customer's plan number: /		
			Approv.				
			Stdrd		Origin:	Repl. f.: /	Repl. by:/

Order no.:	Internal no.	File name:	
Author:	Diagram name:		Page: 6/11

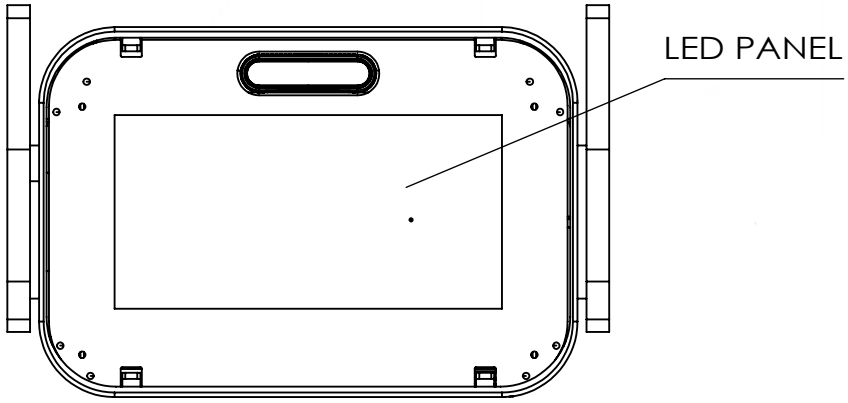

Modification	Date	Name	Date		Customer:		
			Editor		Customer's plan number: /		
			Approv.				
			Stdrd		Origin:	Repl. f.: /	Repl. by:/

Order no.:	Internal no.	File name:	
Author:	Diagram name:		Page: 7/11

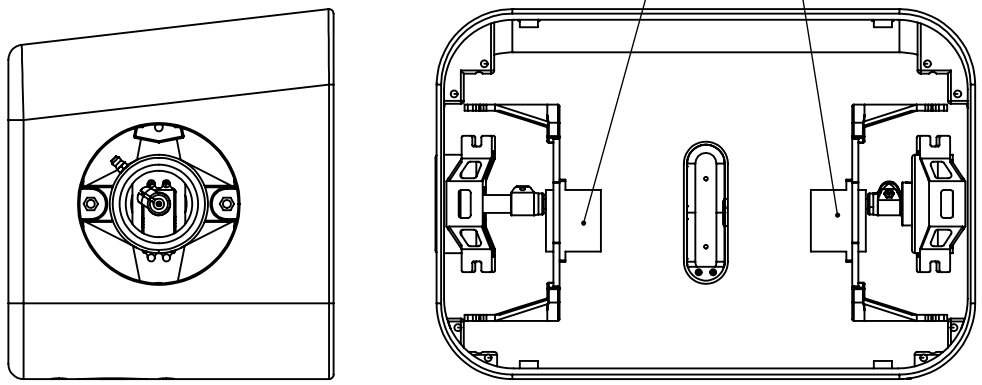

Modification	Date	Name	Date		Customer:		
			Editor		Customer's plan number: /		
			Approv.				
			Stdrd		Origin:	Repl. f.: /	Repl. by:/

Order no.:	Internal no.	File name:	
Author:	Diagram name:		Page: 8/11

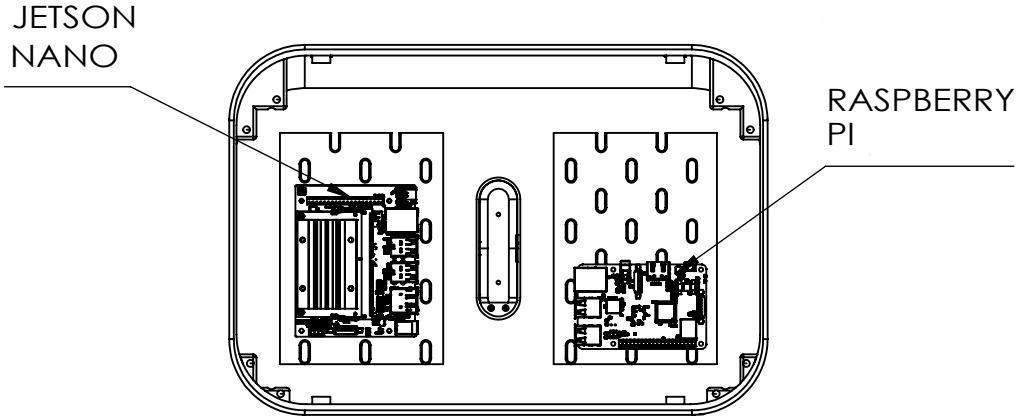

Modification	Date	Name	Date Editor Approv. Stdrd		Customer: Customer's plan number: / Origin:	Repl. f.: /	Repl. by:/	Order no.:	Internal no.	File name:	
								Author:	Diagram name:		Page: 9/11

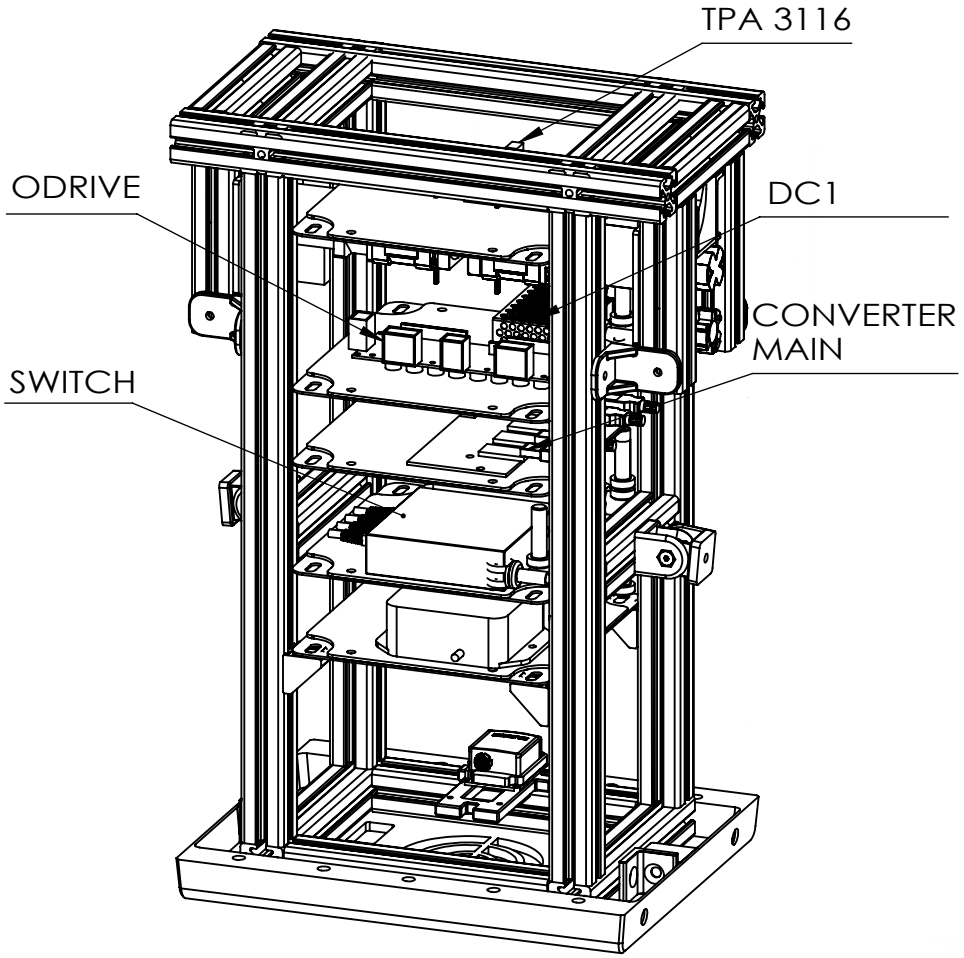

Modification	Date	Name	Date		Customer:		
			Editor		Customer's plan number: /		
			Approv.				
			Stdrd		Origin:	Repl. f.: /	Repl. by:/

Order no.:	Internal no.	File name:	
Author:	Diagram name:		Page: 10/11

Bill of materials			
ID	Description	Type	Manufacturer
LED STRIPS HEAD	5V RGB LED Strips, 116 LED (58 per ear)	WS2812, SMD 5050	
LED STRIPS ARMS	5V RGB LED Strips, 82 LED (31 per arm)	WS2812, SMD 5050	
Raspberry Pi	Raspberry Pi	Raspberry Pi 3 Model B	RASPBERRY PI
SERVO_R	Digital Servo with transmission	SA-1283SG	Savöx
SERVO_L	Digital Servo with transmission	SA-1283SG	Savöx
LED PANEL	64x32 RGB LED Module 256mm * 128mm	SMD2121	
NF Filter	NF-Noise filter	BSL 56050	BASELINE
TPA3116	Audio Amplifier 12-26V	TPA3116	
SWITCH	Network Switch 5 port	TL-SG105	TP-Link
DC1	DC-DC Converter 18V-36V to 5V/3A	SD-15B-5	MeanWell
JETSON NANO	Jetson Nano	Jetson Nano	NVidia
G3	AGM Lead Acid battery, 12V, 23 Ah	12LCP-23	Q-Batteries
G4	AGM Lead Acid battery, 12V, 23 Ah	12LCP-23	Q-Batteries
EVS Computer	Embedded Computer	EVS-1010 MXM1050	Vecow
ARDUINO MEGA	Arduino Microcontroller	Mega 2560 Rev3	Arduino
ODRIVE	ODRIVE 56 V Version	ODRIVE V3.6	ODRIVE
FRS8	Loudspeaker	FRS8 M8	Visaton