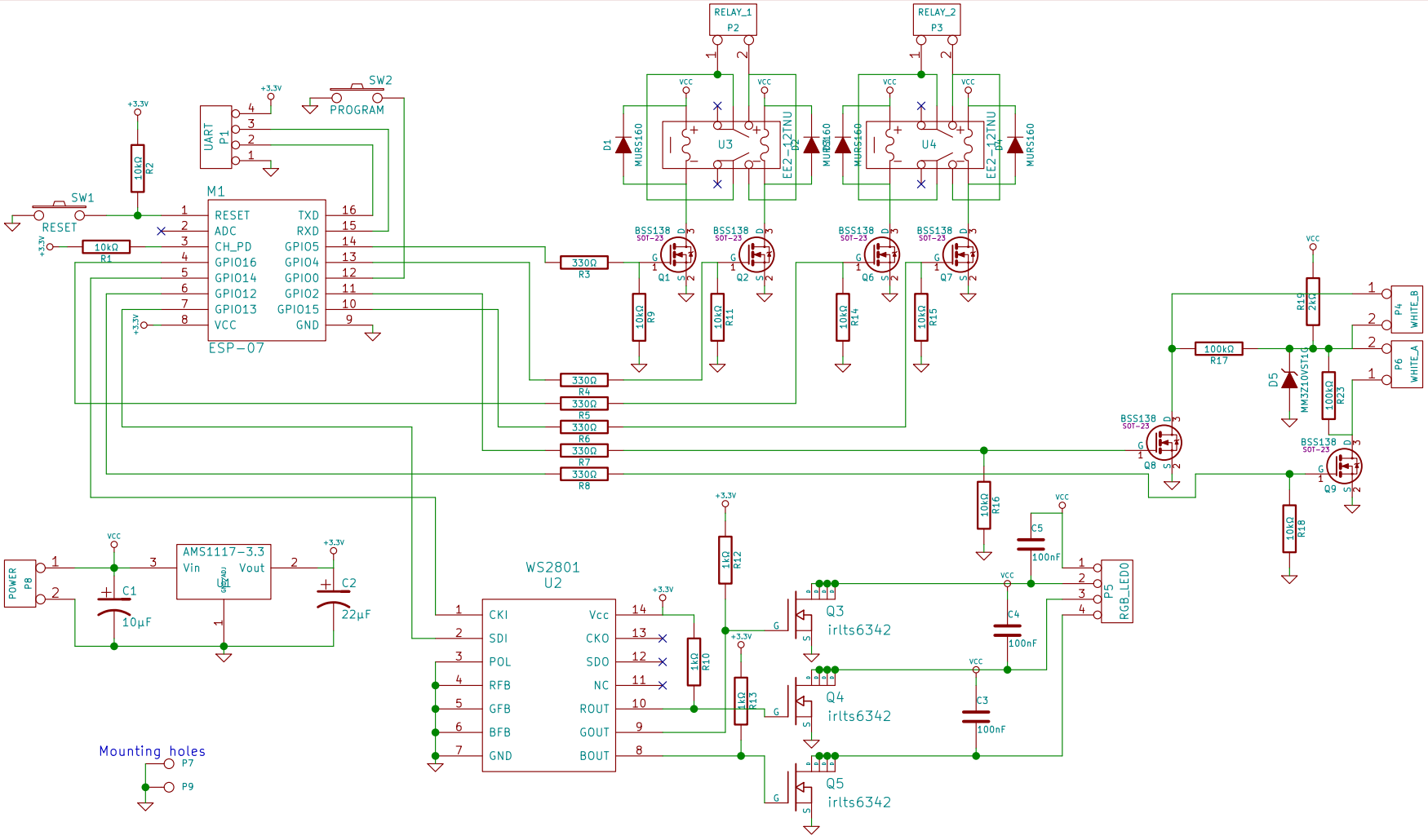

Sheet: /
File: ESP8266LoungeLight.sch

Title:

Size: A4	Date:	Rev:
KiCad E.D.A. kicad (2015-03-25 BZR 5536)-product		Id: 1/1