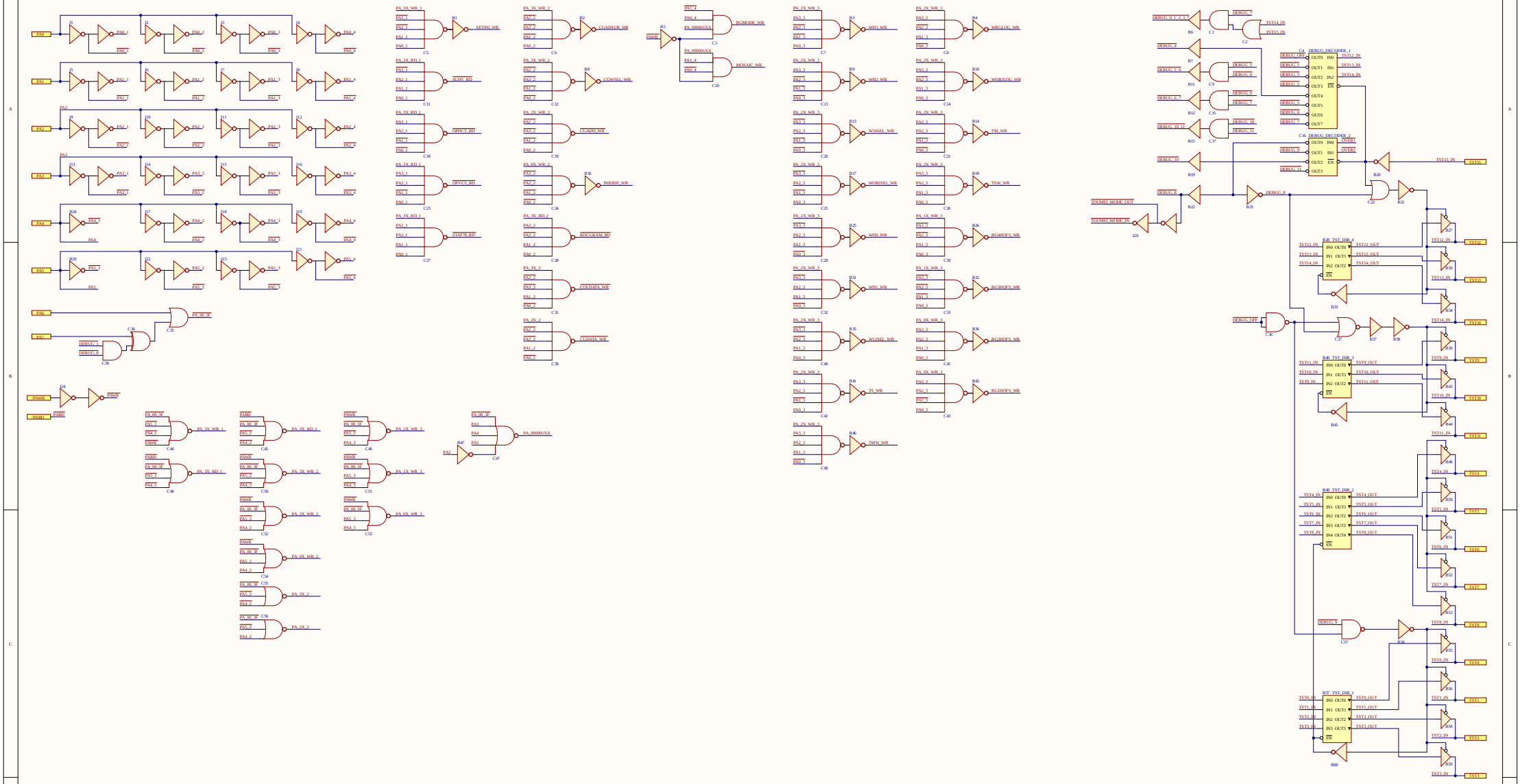
PA0
PA1
PA2
PA3
PA4
PA5
PA6
PA7
PAWR
PARD
SETINI_WR
SLHV_RD
OPHCT_RD
OPVCT_RD
STAT7B_RD
RDCGRAM_RD
CGLDATA_WR
CGDATA_WR
CGADSUB_WR
CGWSEL_WR
CGADD_WR
INIDISP_WR
BGMODE_WR
MOSAIC_WR
WH3_WR
WH2_WR
W34SEL_WR
WOBJSEL_WR
W1SEL_WR
W12SEL_WR
TS_WR
TMW_WR
WBGLOG_WR
WOBJLOG_WR
TM_WR
TSW_WR
BG4HOFS_WR
BG3HOFS_WR
BG2HOFS_WR
BG1HOFS_WR
DEBUG_DECODER_1
DEBUG_DECODER_2
TST_DIR_4
TST_DIR_3
TST_DIR_2
TST_DIR_1
TOUMBI1_MODE_OUT
TOUMBI1_MODE_IN
DEBUG_OFF
DEBUG_8
DEBUG_7
TST15_IN
TST14_IN
TST13_IN
TST12_IN
TST11_IN
TST10_IN
TST9_IN
TST8_IN
TST7_IN
TST6_IN
TST5_IN
TST4_IN
TST3_IN
TST2_IN
TST1_IN
TST0_IN

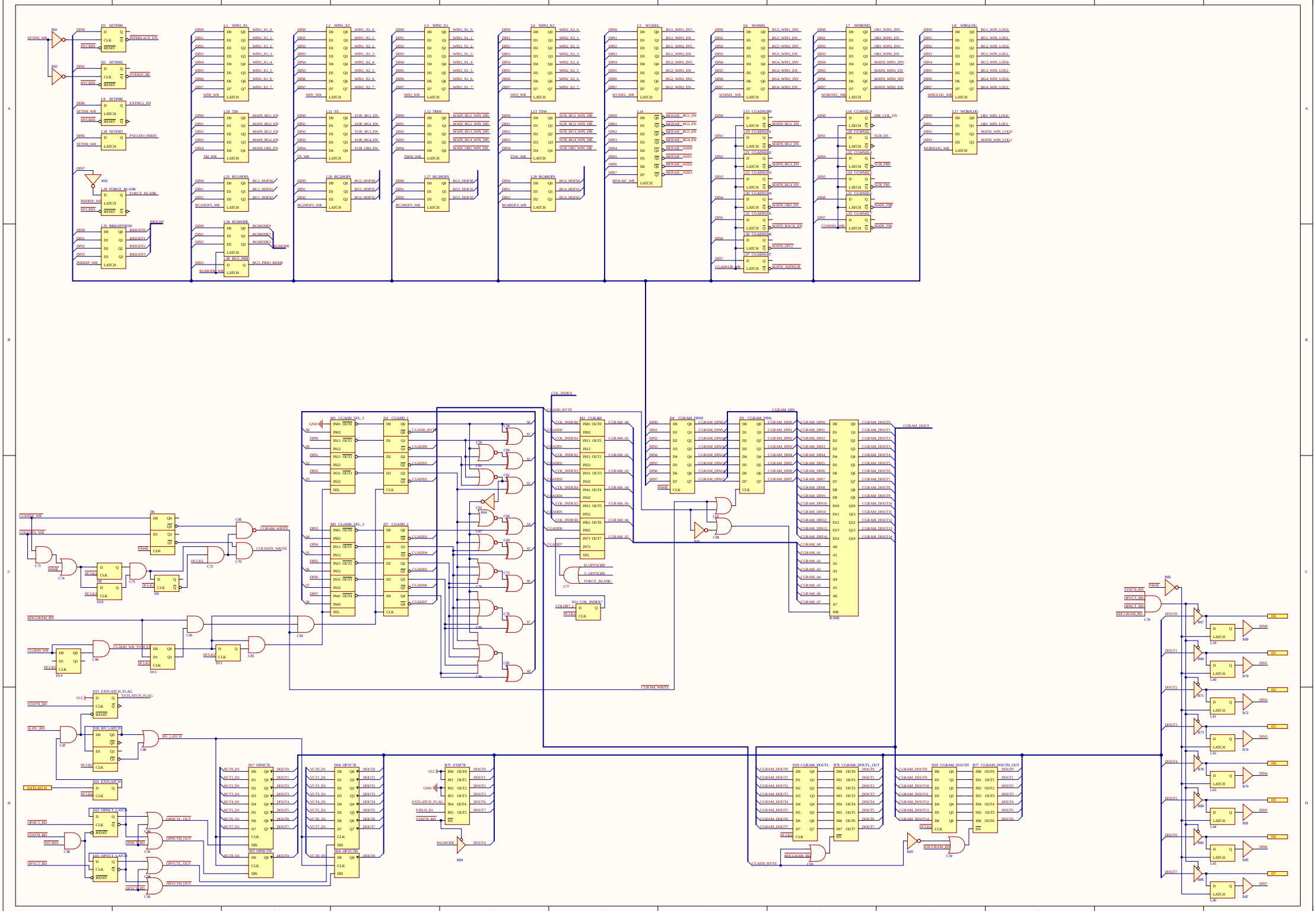
D1_SETIN0
D2_SETIN2
L9_SETIN6
L18_SETIN5
L29_FORCE_BLANK
L35_BRIGHTNESS
L1_WIN1_X1
L2_WIN1_X2
L3_WIN2_X1
L4_WIN2_X2
L5_W12SEL
L6_W34SEL
L7_WORSEL
L8_WBGLOG
L9_EXTBG2_EN
L18_PSEUDO_HRES
L10_TM
L11_TS
L12_TMW
L13_TSW
L14
L15_CGADSUB0
L16_CGWSEL0
L17_WORLOG
L25_BG1HOFS
L26_BG2HOFS
L27_BG3HOFS
L28_BG4HOFS
L34_BGMODE
L38_BG3_PRIO
M1_CGADD_SEL_1
M2_CGRAM
M3_CGADD_SEL_2
D1_CGADD_1
D7_CGADD_2
D24_CGRAM_DINH
D5_CGRAM_DINL
D19_CGRAM_DOUTL
D20_CGRAM_DOUTH
D11_COL_INDEX
D15_EXTLATCH_FLAG
D16_HV_LATCH
D21_EXTLATCH
D22_OPHCT_LATCH
D25_OPVCT_LATCH
D17_OPHCTL
D18_OPVCTL
D23_OPHCTH
D24_OPVCTH
B75_STAT78
CGRAM_DIN
CGRAM_DOUT
COL_INDEX
CGADD_BYTE
CGRAM_WRITE
COLDATA_WRITE
HV_LATCH
OPHCTL_OUT
OPHCTH_OUT
OPVCTL_OUT
OPVCTH_OUT

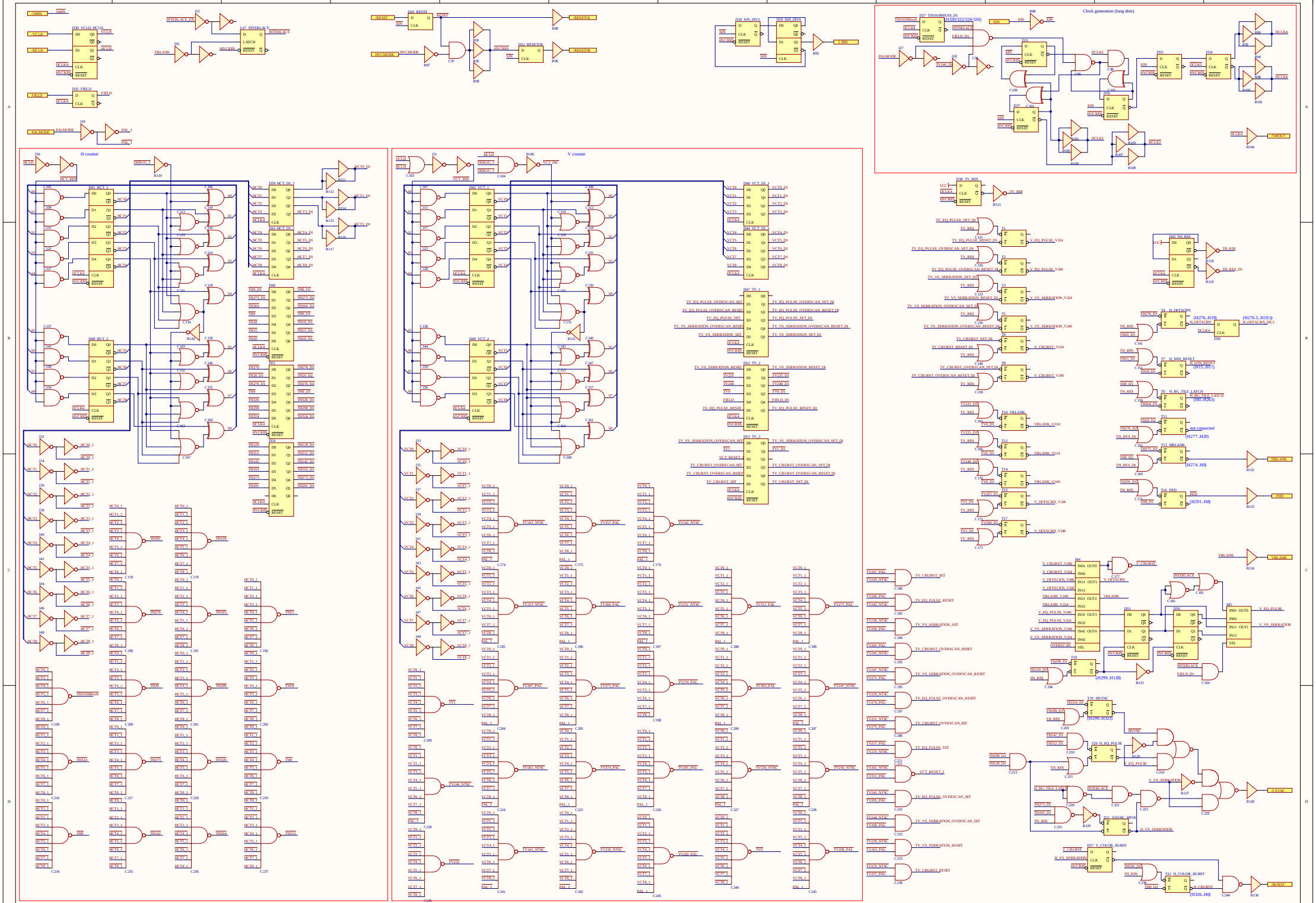
Clock generation (long dots)
H counter
V counter

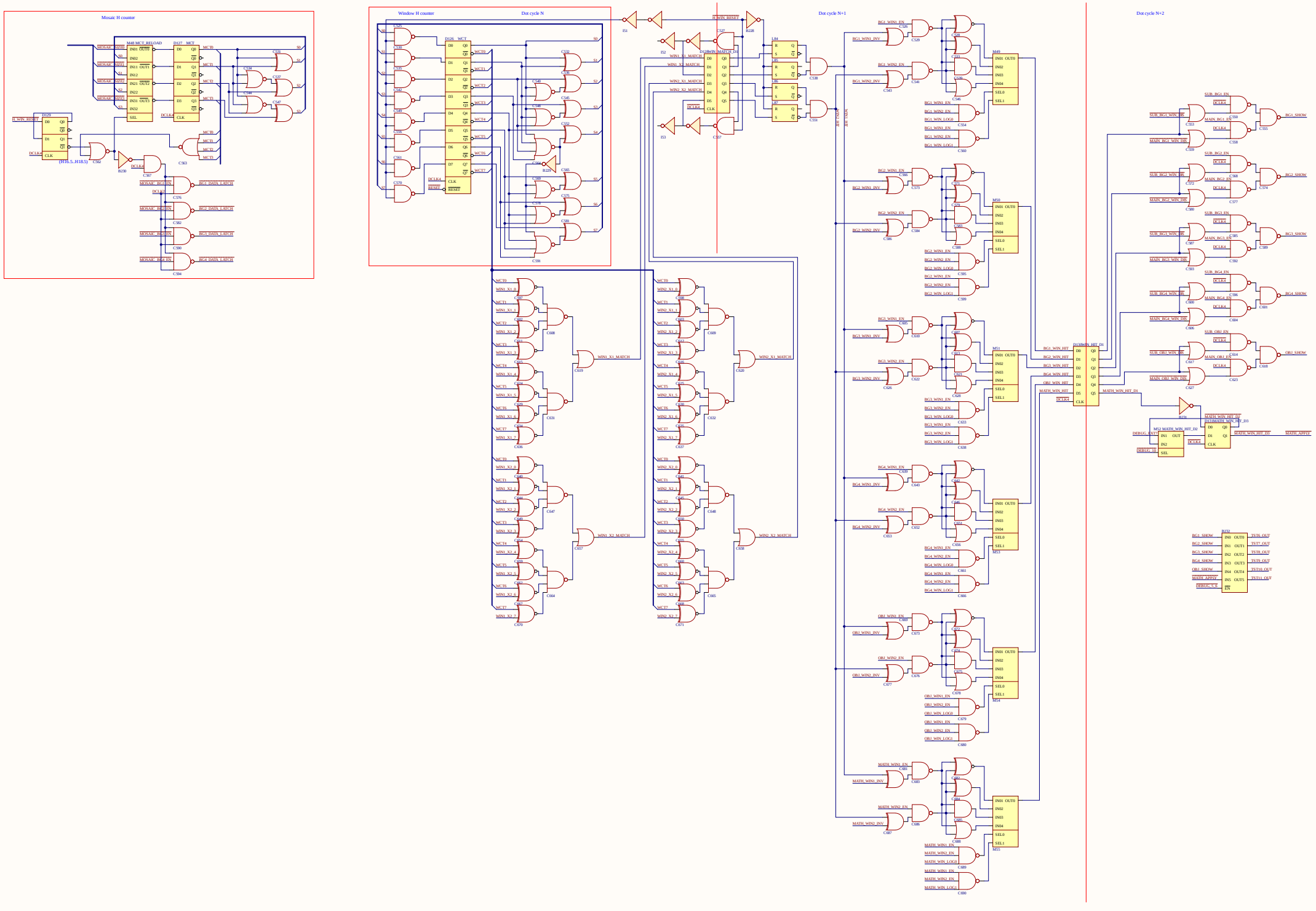
Mosaic H counter
Window H counter
Dot cycle N
Dot cycle N+1
Dot cycle N+2
H_WIN_RESET
MOSAIC_SQ512
MOSAIC_SQ256
MOSAIC_SQ128
MOSAIC_SQ64
M48 MCT_RELOAD
D127 MCT
D129
DCLK4
(H16.5..H18.5)
MOSAIC_BG1EN
MOSAIC_BG2EN
MOSAIC_BG3EN
MOSAIC_BG4_EN
BG1_DATA_LATCH
BG2_DATA_LATCH
BG3_DATA_LATCH
BG4_DATA_LATCH
D126 WCT
RESET
WIN1_X1_MATCH
WIN1_X2_MATCH
WIN2_X1_MATCH
WIN2_X2_MATCH
D128WIN_MATCH_D1
L84
L85
L86
L87
BG1_WIN1_EN
BG1_WIN1_INV
BG1_WIN2_EN
BG1_WIN2_INV
BG1_WIN1_LOG0
BG1_WIN1_LOG1
BG1_WIN2_LOG0
BG1_WIN2_LOG1
BG2_WIN1_EN
BG2_WIN1_INV
BG2_WIN2_EN
BG2_WIN2_INV
BG3_WIN1_EN
BG3_WIN1_INV
BG3_WIN2_EN
BG3_WIN2_INV
BG3_WIN1_LOG0
BG3_WIN1_LOG1
BG4_WIN1_EN
BG4_WIN1_INV
BG4_WIN2_EN
BG4_WIN2_INV
BG4_WIN1_LOG0
BG4_WIN1_LOG1
OBJ_WIN1_EN
OBJ_WIN1_INV
OBJ_WIN2_EN
OBJ_WIN2_INV
OBJ_WIN1_LOG0
OBJ_WIN1_LOG1
OBJ_WIN2_LOG0
OBJ_WIN2_LOG1
MATH_WIN1_EN
MATH_WIN1_INV
MATH_WIN2_EN
MATH_WIN2_INV
MATH_WIN_LOG0
MATH_WIN_LOG1
M49
M50
M51
M52
M53
M54
M55
BG1_WIN_HIT
BG2_WIN_HIT
BG3_WIN_HIT
BG4_WIN_HIT
OBJ_WIN_HIT
MATH_WIN_HIT
D130WIN_HIT_D1
MATH_WIN_HIT_D1
MATH_WIN_HIT_D2
MATH_WIN_HIT_D3
MATH_WIN_HIT_D5
MATH_APPLY
DEBUG_EXT1
DEBUG_TE
SUB_BG1_EN
SUB_BG1_WIN_DIS
MAIN_BG1_EN
MAIN_BG1_WIN_DIS
BG1_SHOW
SUB_BG2_EN
SUB_BG2_WIN_DIS
MAIN_BG2_EN
MAIN_BG2_WIN_DIS
BG2_SHOW
SUB_BG3_EN
SUB_BG3_WIN_DIS
MAIN_BG3_EN
MAIN_BG3_WIN_DIS
BG3_SHOW
SUB_BG4_EN
SUB_BG4_WIN_DIS
MAIN_BG4_EN
MAIN_BG4_WIN_DIS
BG4_SHOW
SUB_OBJ_EN
SUB_OBJ_WIN_DIS
MAIN_OBJ_EN
MAIN_OBJ_WIN_DIS
OBJ_SHOW
B232
TST6_OUT
TST7_OUT
TST8_OUT
TST9_OUT
TST10_OUT
TST11_OUT
DEBUG_5_E

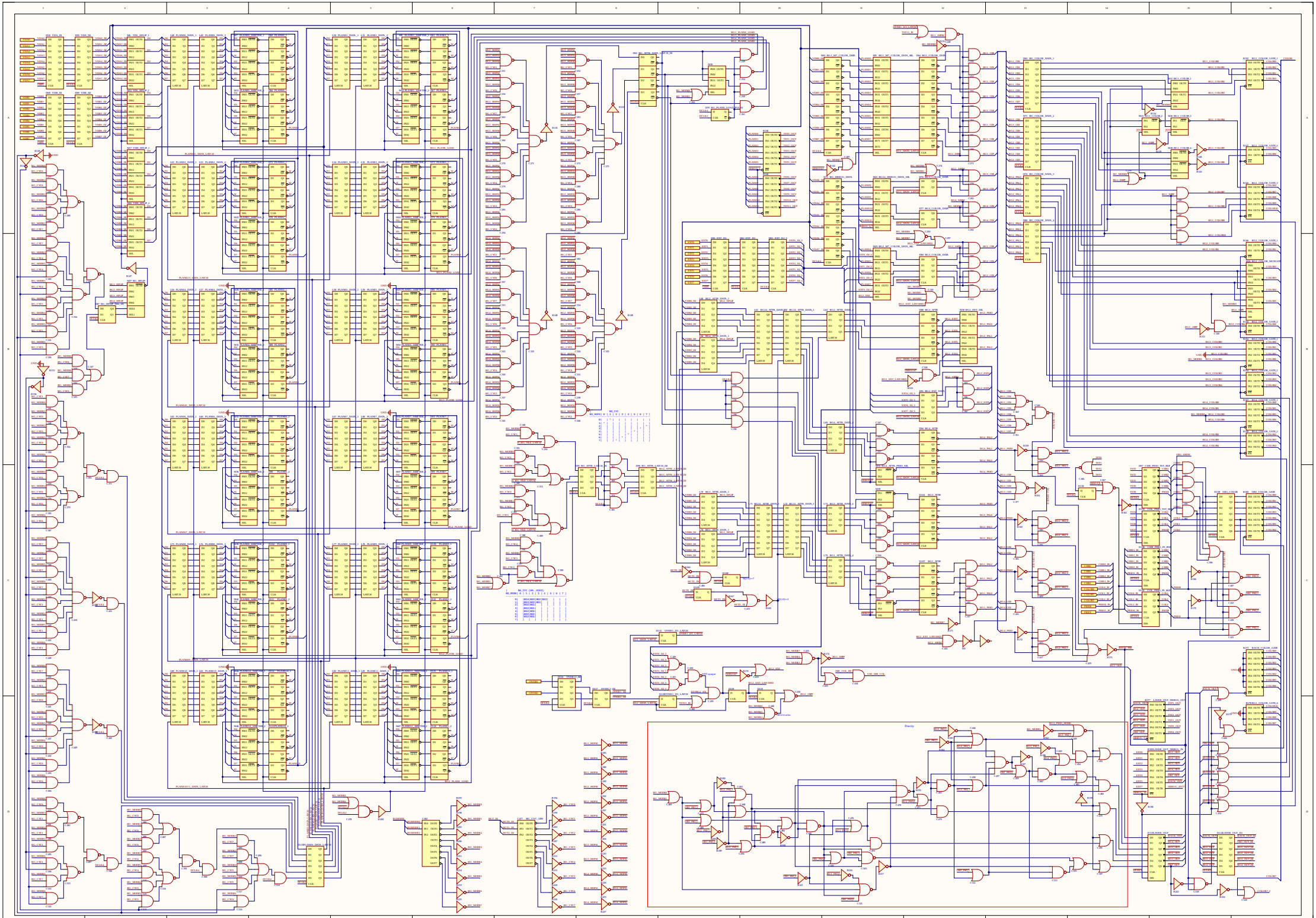

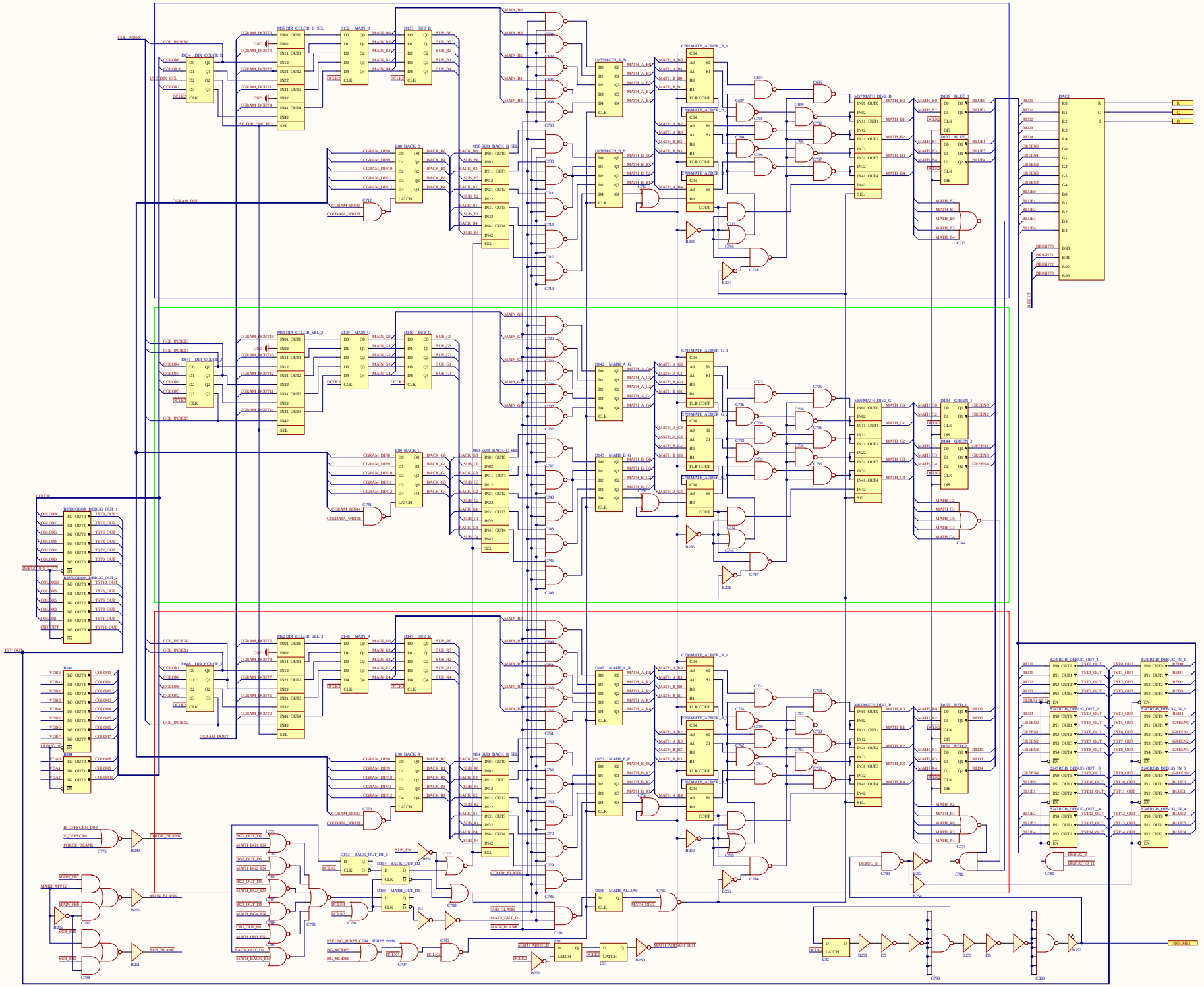
COL_INDEX6
COL_INDEX3
COL_INDEX4
COL_INDEX5
COL_INDEX0
COL_INDEX1
COL_INDEX2
CGRAM_DIN
COLOR
TST_OUT
D134 DIB_COLOR_R
D141 DIB_COLOR_G
D148 DIB_COLOR_B
M56 DIB_COLOR_R_SEL
M59 DIB_COLOR_SEL_2
M62 DIB_COLOR_SEL_3
D132 MAIN_R
D139 MAIN_G
D146 MAIN_B
D133 SUB_R
D140 SUB_G
D147 SUB_B
L88 BACK_R
L89 BACK_G
L90 BACK_B
M58 SUB_BACK_R_SEL
M61 SUB_BACK_G_SEL
M64 SUB_BACK_B_SEL
C680 MATH_ADDER_R_3
C721 MATH_ADDER_G_1
C759 MATH_ADDER_R_3
D135 MATH_A_R
D138 MATH_B_R
D142 MATH_A_G
D145 MATH_B_G
D149 MATH_A_R
D152 MATH_B_R
M57 MATH_DIV2_B
M60 MATH_DIV2_G
M63 MATH_DIV2_R
D136 BLUE_1
D137 BLUE_2
D143 GREEN_1
D144 GREEN_2
D150 RED_1
D151 RED_2
DAC1
B239 COLOR_DEBUG_OUT_1
B240 COLOR_DEBUG_OUT_2
B241 COLOR_DEBUG_OUT_3
B242 COLOR_DEBUG_OUT_4
B243 RGB_DEBUG_OUT_1
B244 RGB_DEBUG_OUT_2
B245 RGB_DEBUG_OUT_3
B246 RGB_DEBUG_OUT_4
B247 RGB_DEBUG_IN_1
B248 RGB_DEBUG_IN_2
B249 RGB_DEBUG_IN_3
B250 RGB_DEBUG_IN_4
H_OFFSCRN_D0_5
V_OFFSCRN
FORCE_BLANK
COLOR_BLANK
MAIN_FB1
MAIN_FB2
SUB_FB1
SUB_FB2
MAIN_BLANK
SUB_BLANK
PSEUDO_HIRES
HIRES mode
BG_MODE5
BG_MODE6
MATH_ADD/SUB
MATH_ADD/SUB_HD1
TOUMIEL