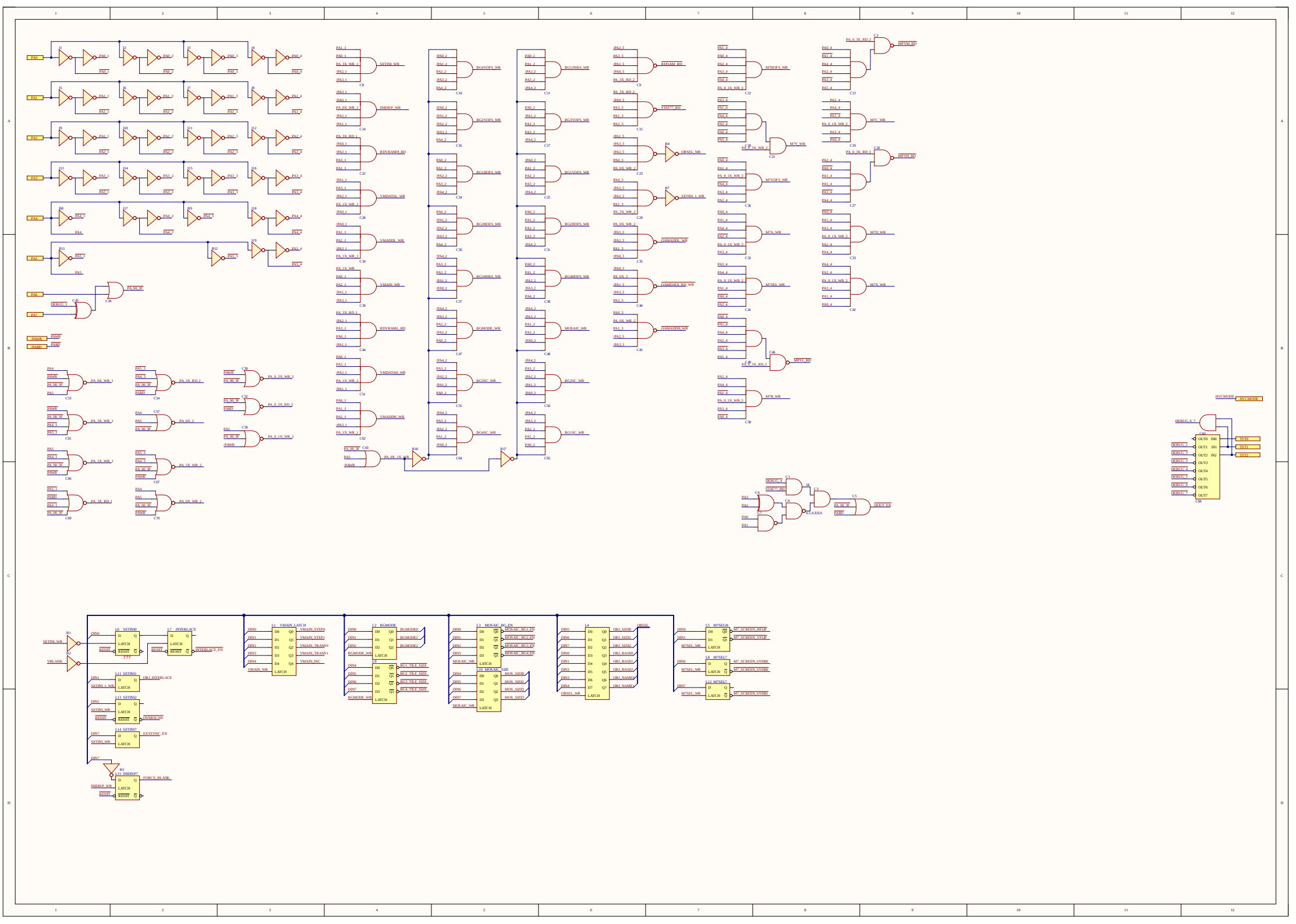
SETINI_WR
INDISP_WR
RDVRAMH_RD
VMDATAL_WR
VMADDL_WR
VMAIN_WR
RDVRAML_RD
VMDATAH_WR
VMADDH_WR
BG4VOFS_WR
BG2VOFS_WR
BG1HOFS_WR
BG3HOFS_WR
BG4SNBA_WR
BGMODE_WR
BG3SC_WR
BG4SC_WR
BG1GNBA_WR
BG3VOFS_WR
BG1VOFS_WR
BG2HOFS_WR
BG4HOFS_WR
MOSAIC_WR
BG2SC_WR
BG1SC_WR
RDOAM_RD
STAT77_RD
OBSEL_WR
SETINI_L_WR
OAMADDL_WR
OAMDATA_RD_WR
OAMADDH_WR
M7HOFS_WR
M7VOFS_WR
M7A_WR
M7SEL_WR
M7B_WR
M7Y_WR
MPYM_RD
M7C_WR
MPYH_RD
M7D_WR
M7X_WR
HVCMODE
DOUT_EN
VMAIN_LATCH
VMAIN_STEP0
VMAIN_STEP1
VMAIN_TRANS0
VMAIN_TRANS1
VMAIN_INC
BGMODE
BG1_TILE_SIZE
BG2_TILE_SIZE
BG3_TILE_SIZE
BG4_TILE_SIZE
MOSAIC_BG_EN
MOSAIC_SIZE
MOS_SIZE0
MOS_SIZE1
MOS_SIZE2
MOS_SIZE3
OBSEL
OBJ_SIZE0
OBJ_SIZE1
OBJ_SIZE2
OBJ_BASE0
OBJ_BASE1
OBJ_NAME0
OBJ_NAME1
M7SEL0
M7_SCREEN_HFLIP
M7_SCREEN_VFLIP
M7SEL7
M7_SCREEN_OVER0
M7_SCREEN_OVER1
SETINI_WR
VBLANK
INTERLACE
INTERLACE_EN
OBJ_INTERLACE
OVERSC_EN
EXTSYNC_EN
INDISP7
FORCE_BLANK

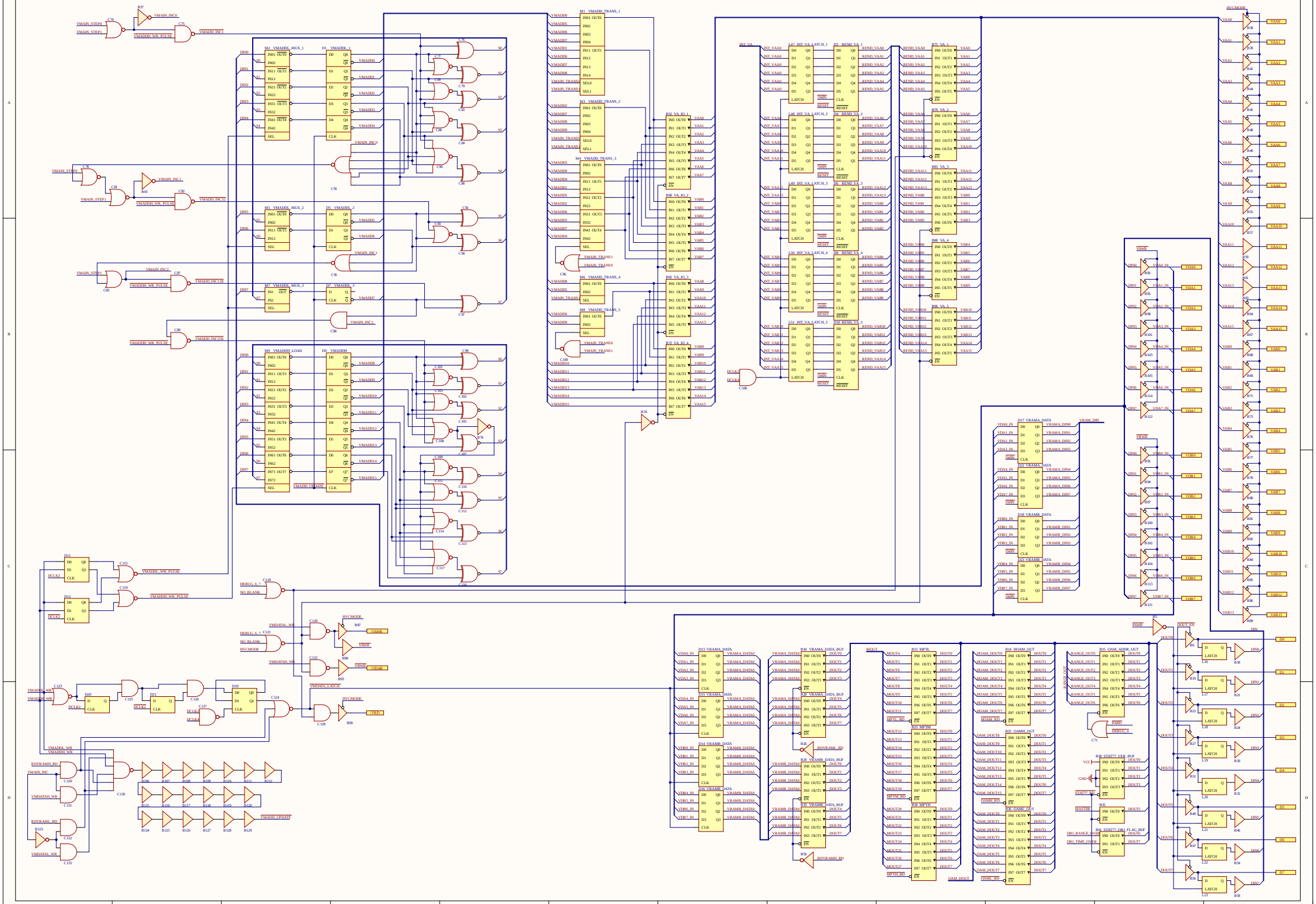
VMAIN_STEP0
VMAIN_STEP1
VMAIN_INC0
VMADDH_WR_PULSE
VMADD_INC1
VMADD_INC32
VMADD_INC128
VMADD_INC256
VMAIN_INC1
VMAIN_INC2
M2 VMADDL_MUX_1
D1 VMADDL_1
M5 VMADDL_MUX_2
D5 VMADDL_2
M7 VMADDL_MUX_3
D7 VMADDL_3
M9 VMADDH_LOAD
D9 VMADDH
VMADD_UPDATE
M1 VMADD_TRANS_1
M3 VMADD_TRANS_2
M4 VMADD_TRANS_3
M6 VMADD_TRANS_4
M8 VMADD_TRANS_5
VMAIN_TRANS0
VMAIN_TRANS1
B52 VA_IO_1
B46 VA_IO_2
B48 VA_IO_3
B72 VA_IO_4
INT_VA
L47 INT_VA_LATCH_1
L48 INT_VA_LATCH_2
L49 INT_VA_LATCH_3
L50 INT_VA_LATCH_4
L51 INT_VA_LATCH_5
D3 REND_VA_1
D4 REND_VA_2
D6 REND_VA_3
D8 REND_VA_4
D10 REND_VA_5
B25 VA_1
B29 VA_2
B33 VA_3
B38 VA_4
B96 VA_5
HVCMODE
DCLK2
DCLK6
DCLK7
DEBUG_6_7
NO_BLANK
VMDATAL_WR
VMDATAH_WR
VMDATA_LATCH
VMADDL_WR
VMADDH_WR
RDVRAMH_RD
RDVRAML_RD
VMAIN_INC
D11
D12
D20
D21
D19
D17 VRAMA_DATA
D22 VRAMA_DATA
D18 VRAMB_DATA
D23 VRAMB_DATA
D13 VRAMA_DATA
D15 VRAMA_DATA
D14 VRAMB_DATA
D16 VRAMB_DATA
B18 VRAMA_DATA_BUF
B19 VRAMA_DATA_BUF
B29 VRAMB_DATA_BUF
B31 VRAMB_DATA_BUF
B30
B32
B13 MPYL
B23 MPYM
B34 MPYH
B14 HOAM_OUT
B25 OAMH_OUT
B36 OAML_OUT
B15 OAM_ADDR_OUT
B28 STAT77_VER_BUF
B35
B94 STAT77_OBJ_FLAG_BUF
MOUT
MPYL_RD
MPYM_RD
MPYH_RD
HOAM_RD
OAMH_RD
OAML_RD
OAM_DOUT
RANGE_OUT
OBJ_RANGE_OVER
OBJ_TIME_OVER
STAT77_RD
MASTHF
PARD
DEBUG_4
VAWR
VRWR
VRAM_DIN
DIN
DOUT_EN
PAWR
VAA0
VAA1
VAA2
VAA3
VAA4
VAA5
VAA6
VAA7
VAA8
VAA9
VAA10
VAA11
VAA12
VAA13
VAB0
VAB1
VAB2
VAB3
VAB4
VAB5
VAB6
VAB7
VAB8
VAB9
VAB10
VAB11
VAB12
VAB13
VDA0
VDA1
VDA2
VDA3
VDA4
VDA5
VDA6
VDA7
VDB0
VDB1
VDB2
VDB3
VDB4
VDB5
VDB6
VDB7
D0
D1
D2
D3
D4
D5
D6
D7

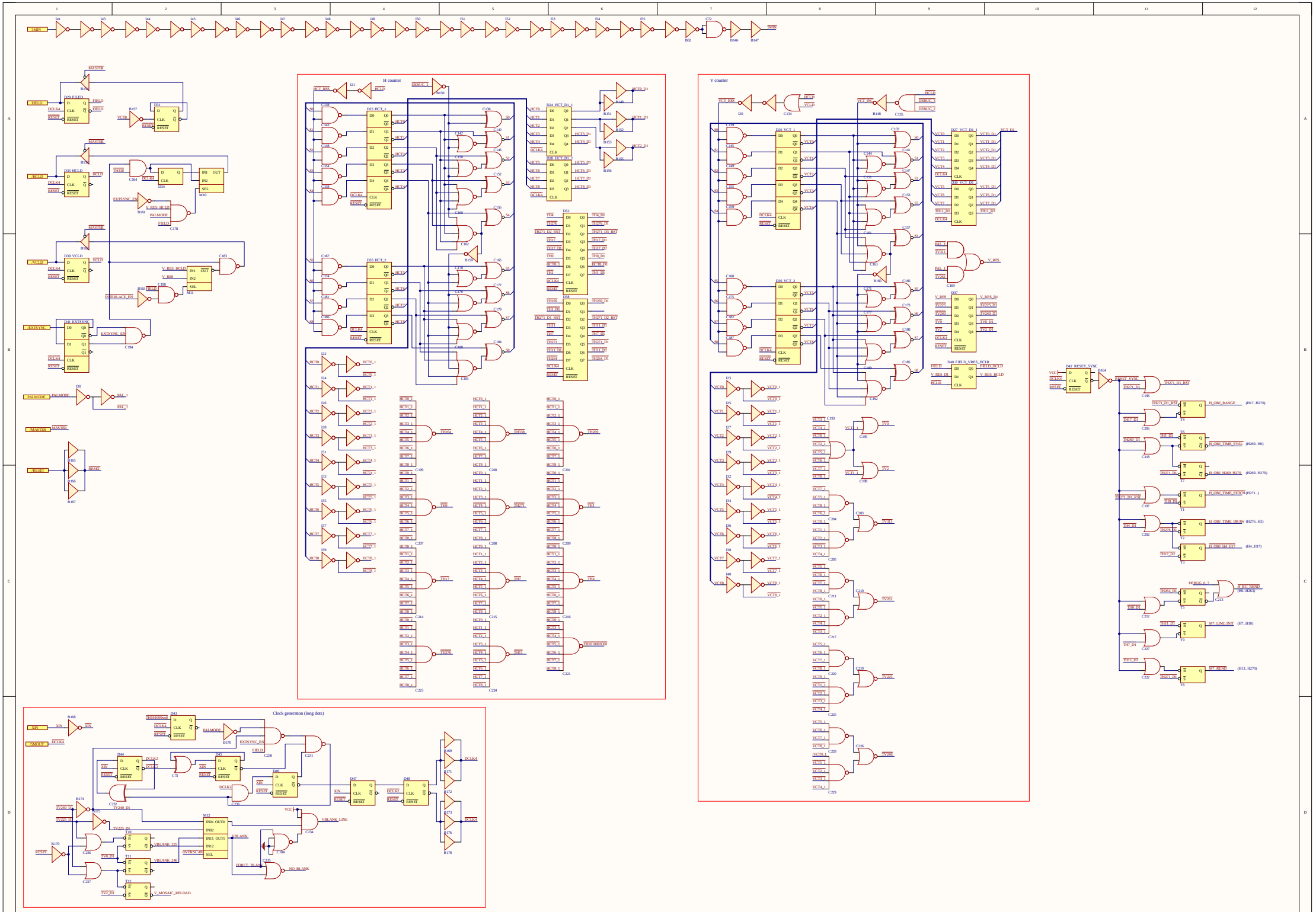
H counter
V counter
Clock generation (long dots)

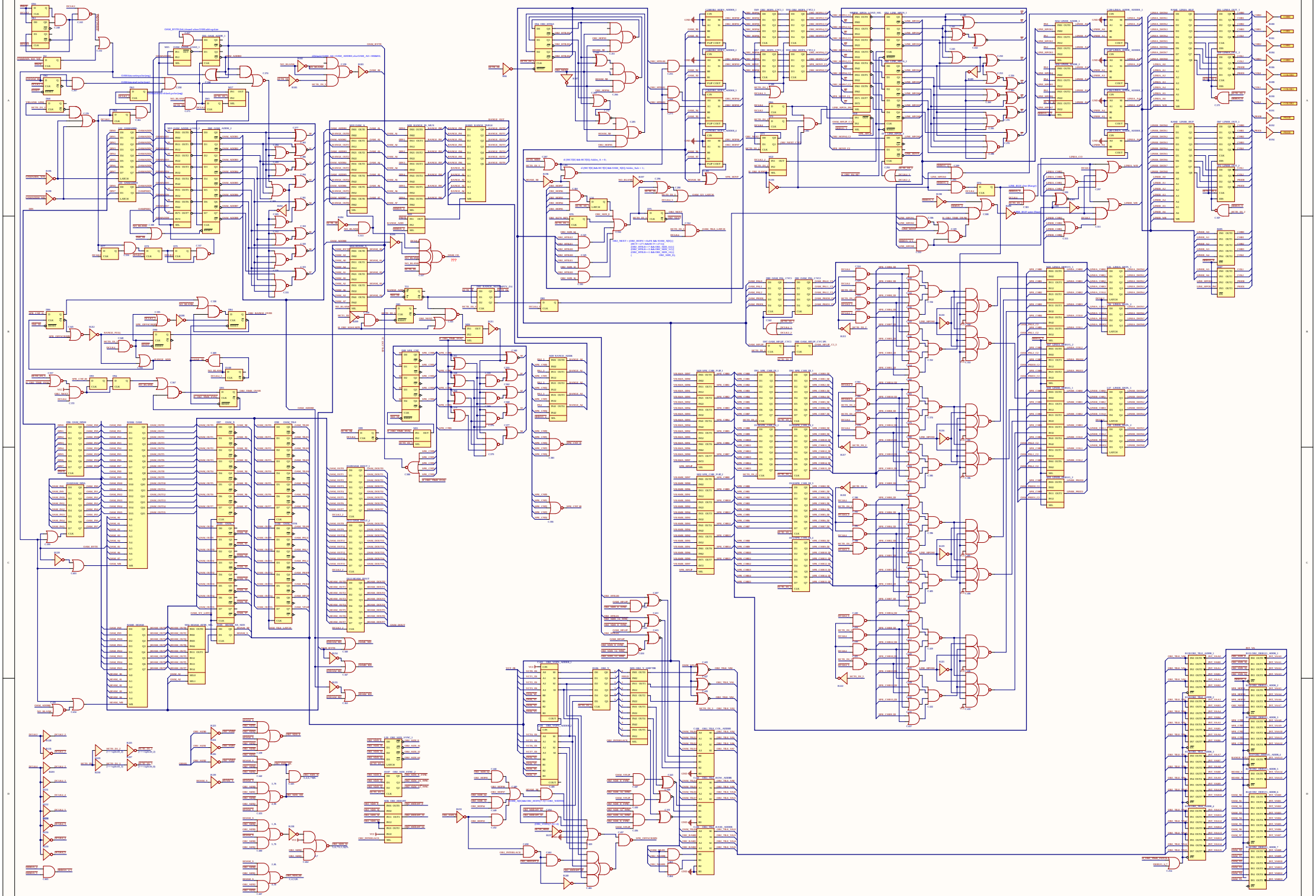

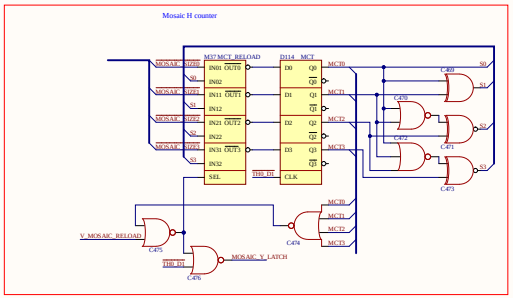
Mosaic H counter
M37 MCT_RELOAD
D114 _MCT
MOSAIC_SIZE0
MOSAIC_SIZE1
MOSAIC_SIZE2
MOSAIC_SIZE3
S0
S1
IN01 OUT0
IN02
IN11 OUT1
IN12
IN21 OUT2
IN22
IN31 OUT3
IN32
SEL
D0 Q0 Q0
D1 Q1 Q1
D2 Q2 Q2
D3 Q3 Q3
CLK
THB_D1
MCT0
MCT1
MCT2
MCT3
C469
C470
C472
C471
C473
V_MOSAIC_RELOAD
C475
C474
C476
_MOSAIC_V_LATCH

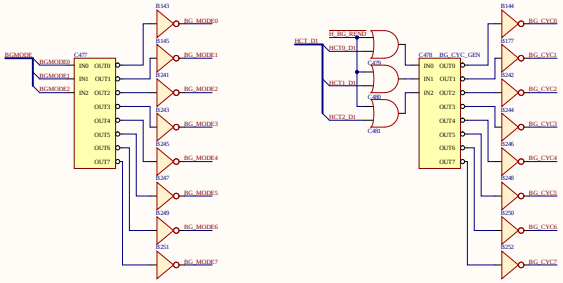
BGMODE
BGMODE0
BGMODE1
BGMODE2
C477
IN0 OUT0
IN1 OUT1
IN2 OUT2
OUT3
OUT4
OUT5
OUT6
OUT7
B143
B145
B241
B243
B245
B247
B249
B251
BG_MODE0
BG_MODE1
BG_MODE2
BG_MODE3
BG_MODE4
BG_MODE5
BG_MODE6
BG_MODE7
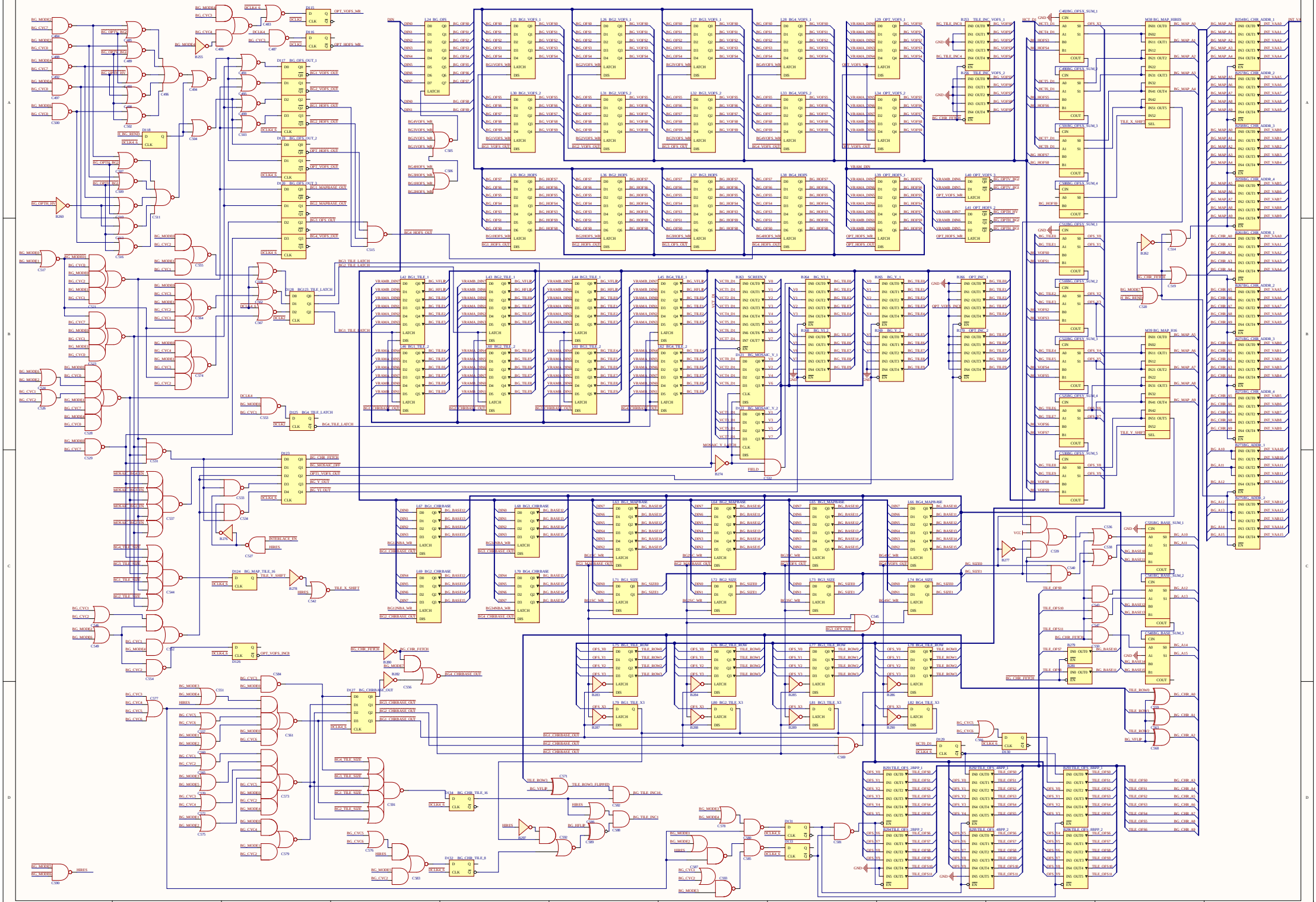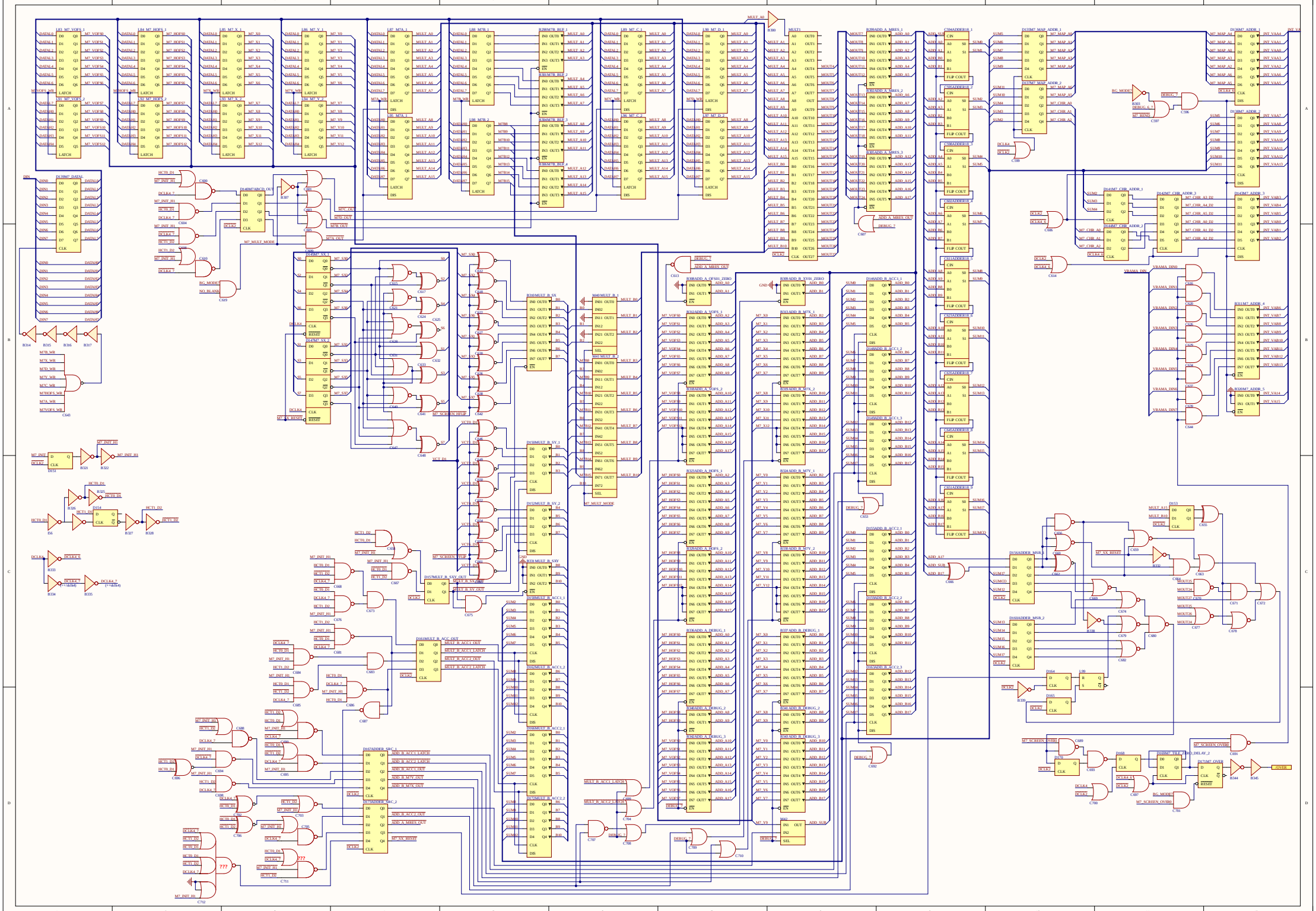
HCT_D1
H_BG_RUN5
HCT0_D1
HCT1_D1
HCT2_D1
C479
C480
C481
C478 BG_CYC_GEN
IN0 OUT0
IN1 OUT1
IN2 OUT2
OUT3
OUT4
OUT5
OUT6
OUT7
B144
B177
B242
B244
B246
B248
B250
B252
BG_CYC0
BG_CYC1
BG_CYC2
BG_CYC3
BG_CYC4
BG_CYC5
BG_CYC6
BG_CYC7