Multimeter Board

Wednesday, January 11, 2023 11:47 AM

3 Apps:
App.c
App_rio2.c
App_multimeter.c

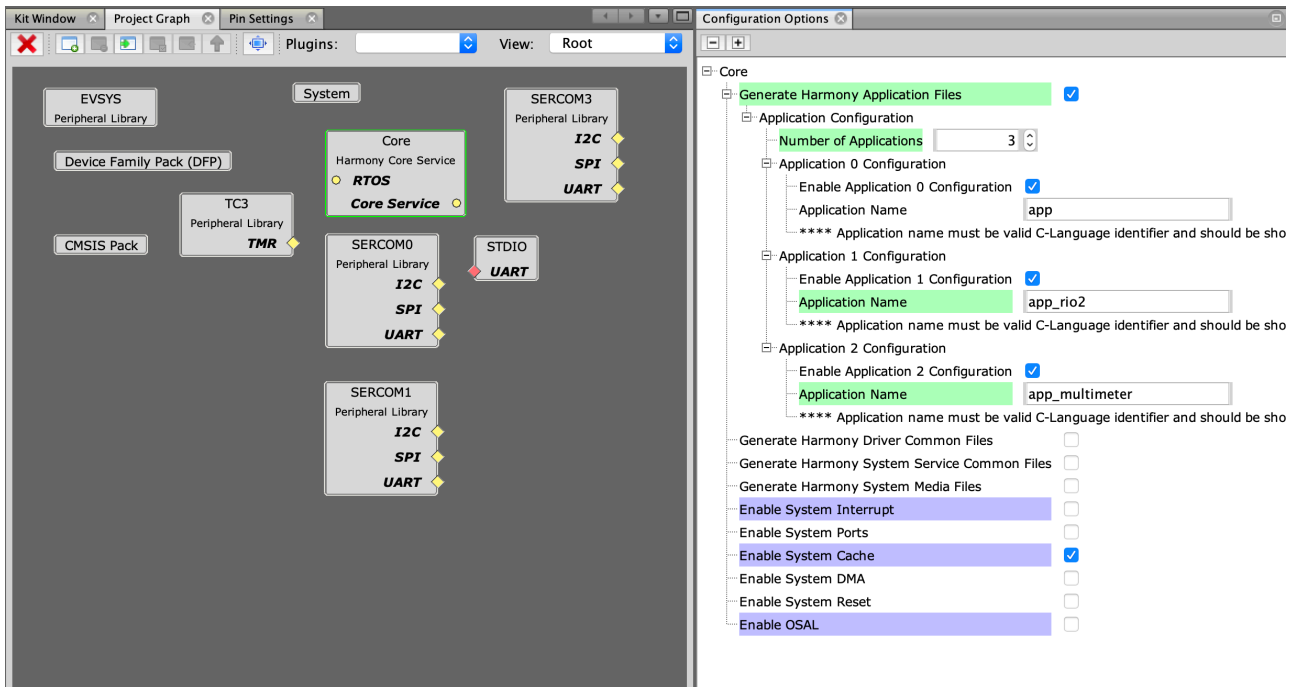

SERCOM0 and SERCOM1 DIRECT drive

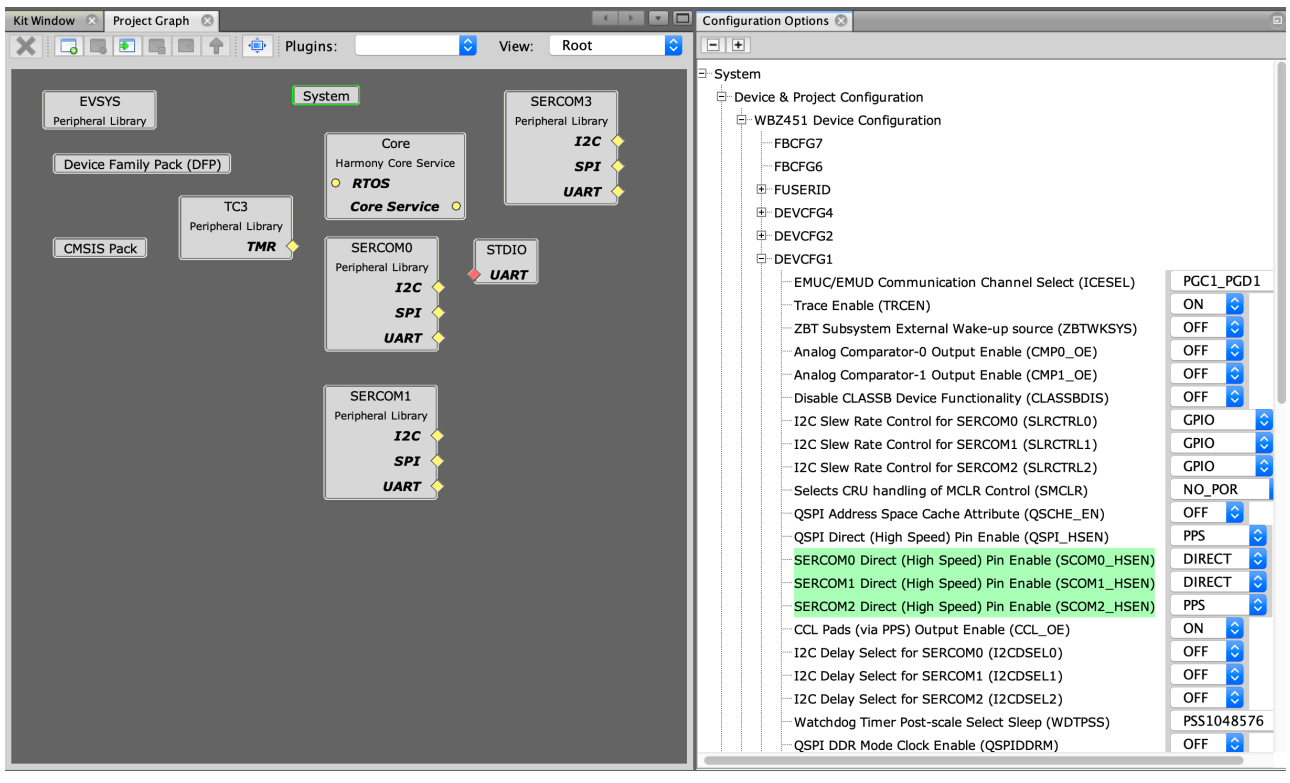

SERCOM0 UART VM

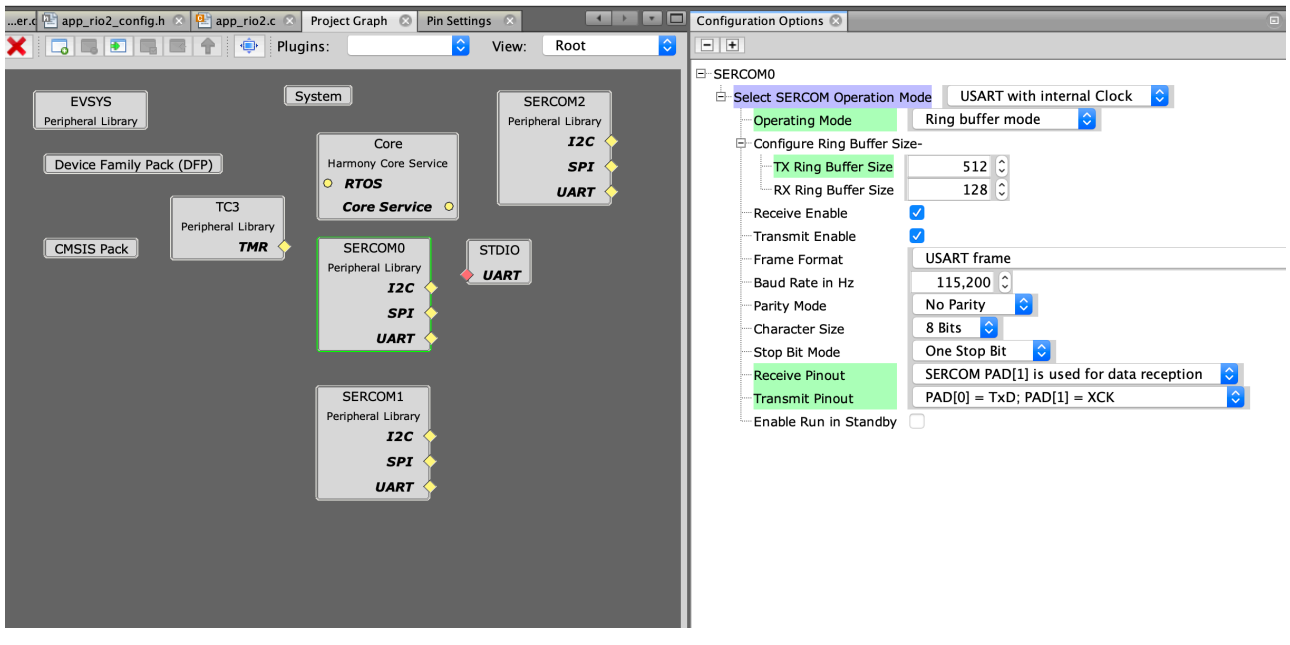

SERCOM1 SPI multimeter

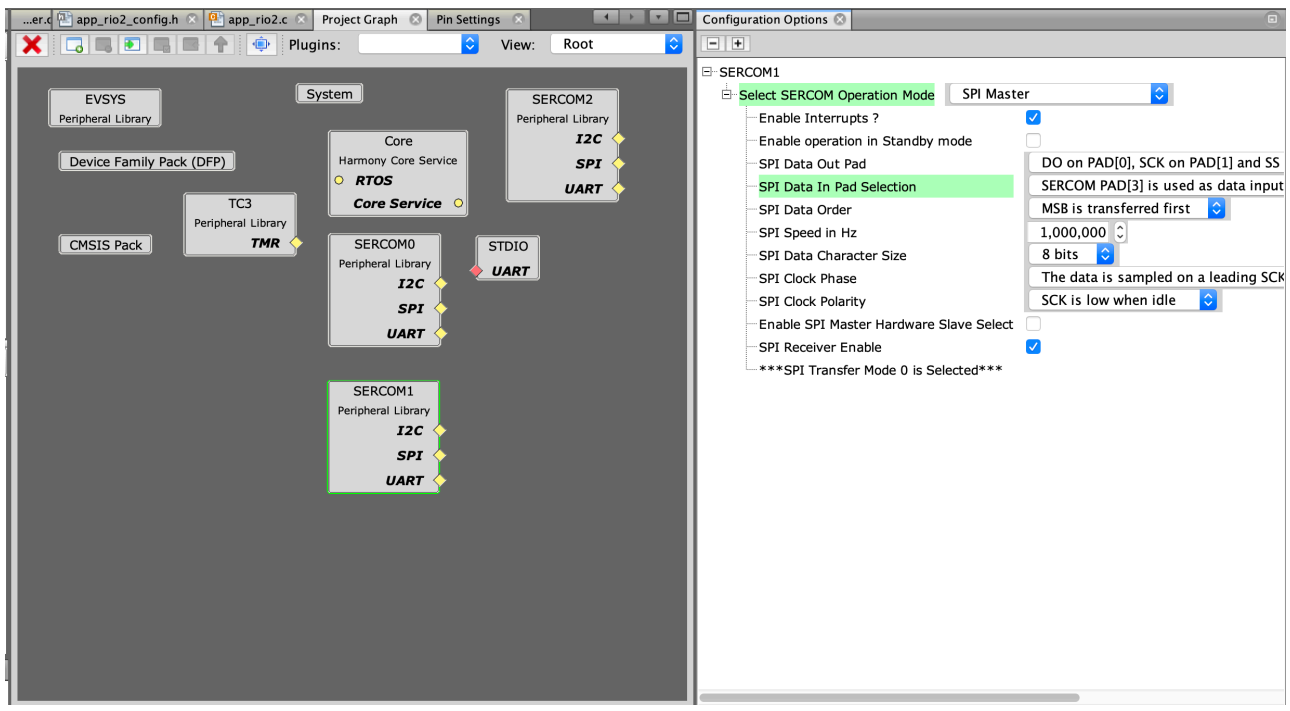

SERCOM2 UART to WFI32 Anycloud

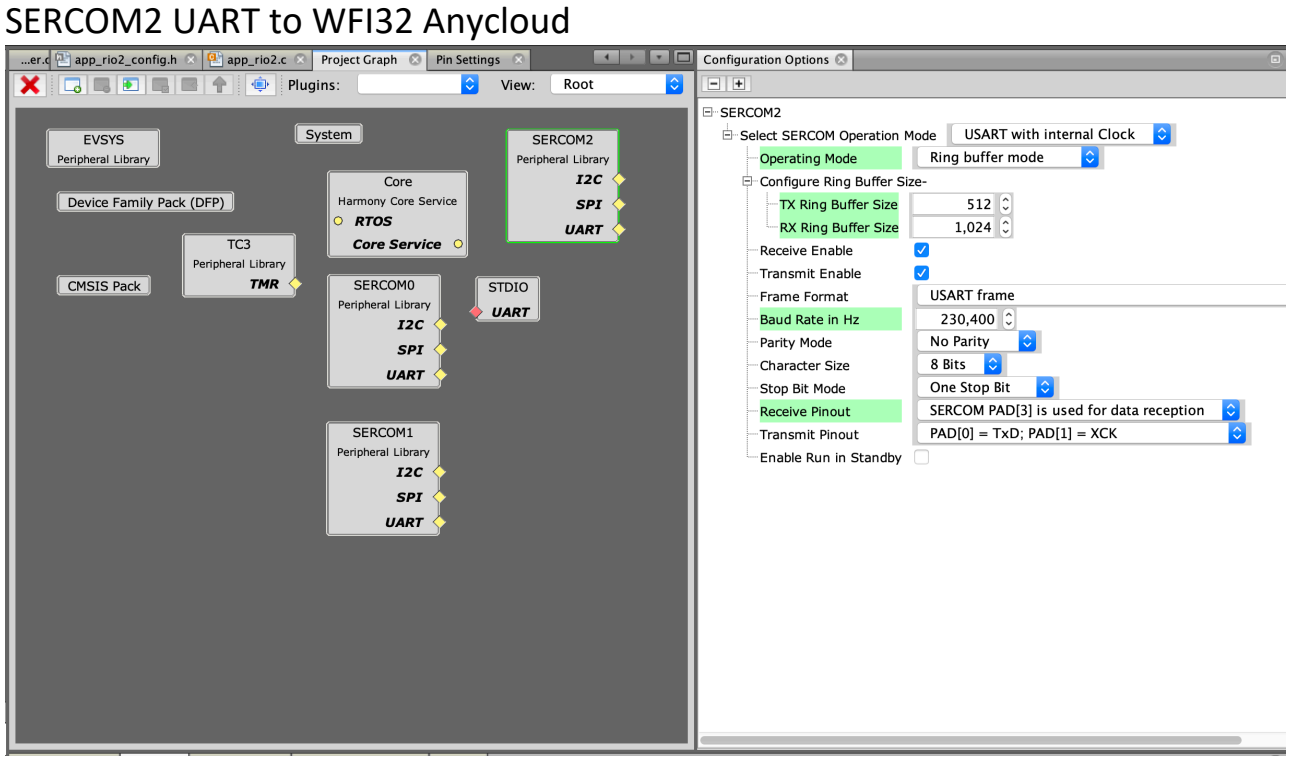

Pin settings

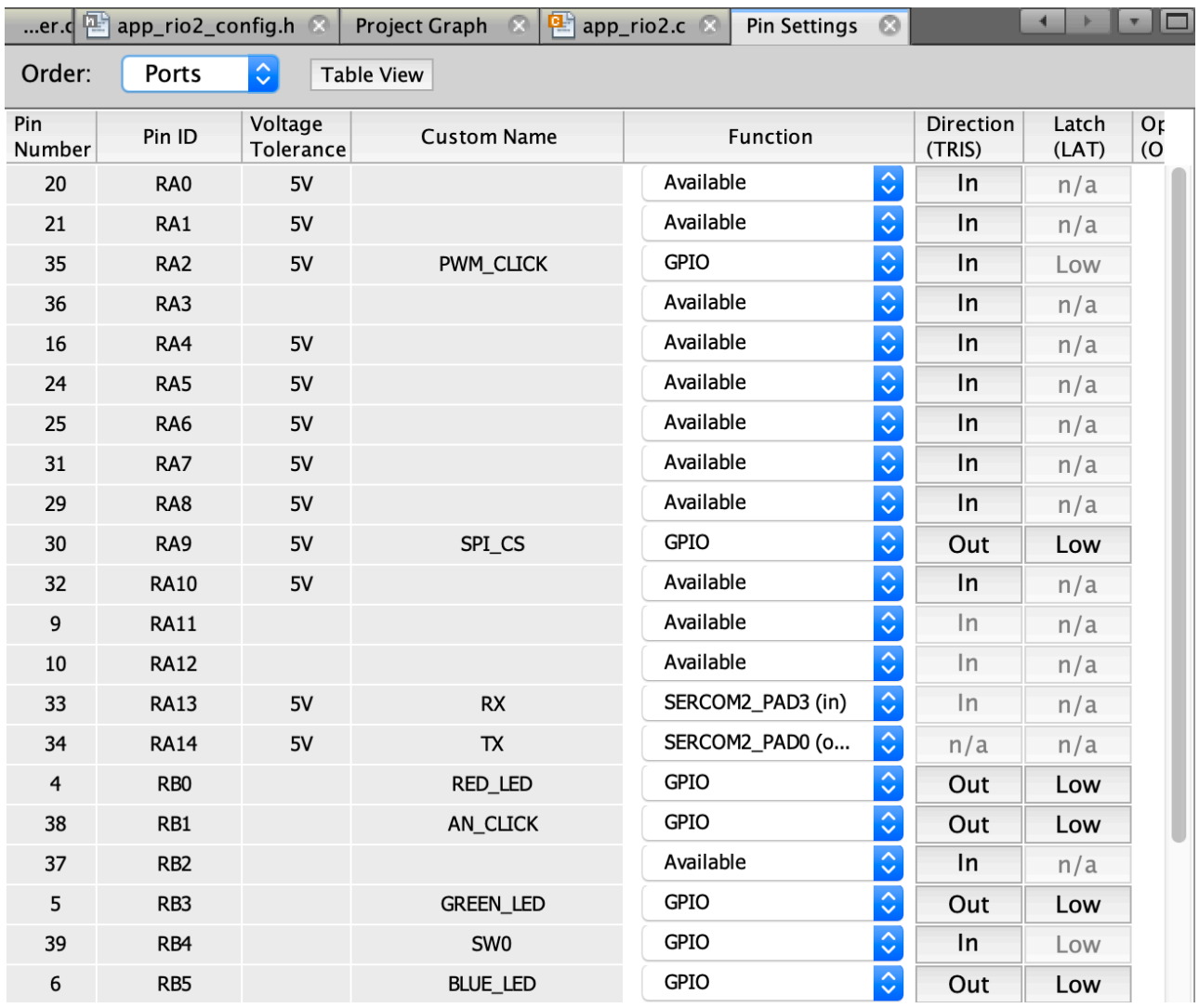

Pin Number	Pin ID	Voltage Tolerance	Custom Name	Function	Direction (TRIS)	Latch (LAT)	Op (O
20	RA0	5V		Available	In	n/a	
21	RA1	5V		Available	In	n/a	
35	RA2	5V	PWM_CLICK	GPIO	In	Low	
36	RA3			Available	In	n/a	
16	RA4	5V		Available	In	n/a	
24	RA5	5V		Available	In	n/a	
25	RA6	5V		Available	In	n/a	
31	RA7	5V		Available	In	n/a	
29	RA8	5V		Available	In	n/a	
30	RA9	5V	SPI_CS	GPIO	Out	Low	
32	RA10	5V		Available	In	n/a	
9	RA11			Available	In	n/a	
10	RA12			Available	In	n/a	
33	RA13	5V	RX	SERCOM2_PAD3 (in)	In	n/a	
34	RA14	5V	TX	SERCOM2_PAD0 (o...	n/a	n/a	
4	RB0		RED_LED	GPIO	Out	Low	
38	RB1		AN_CLICK	GPIO	Out	Low	
37	RB2			Available	In	n/a	
5	RB3		GREEN_LED	GPIO	Out	Low	
39	RB4		SW0	GPIO	In	Low	
6	RB5		BLUE_LED	GPIO	Out	Low	

12	RB6			Available	In	n/a
13	RB7		LED	GPIO	Out	Low
14	RB8			Available	In	n/a
15	RB9			Available	In	n/a
17	RB10	5V		Available	In	n/a

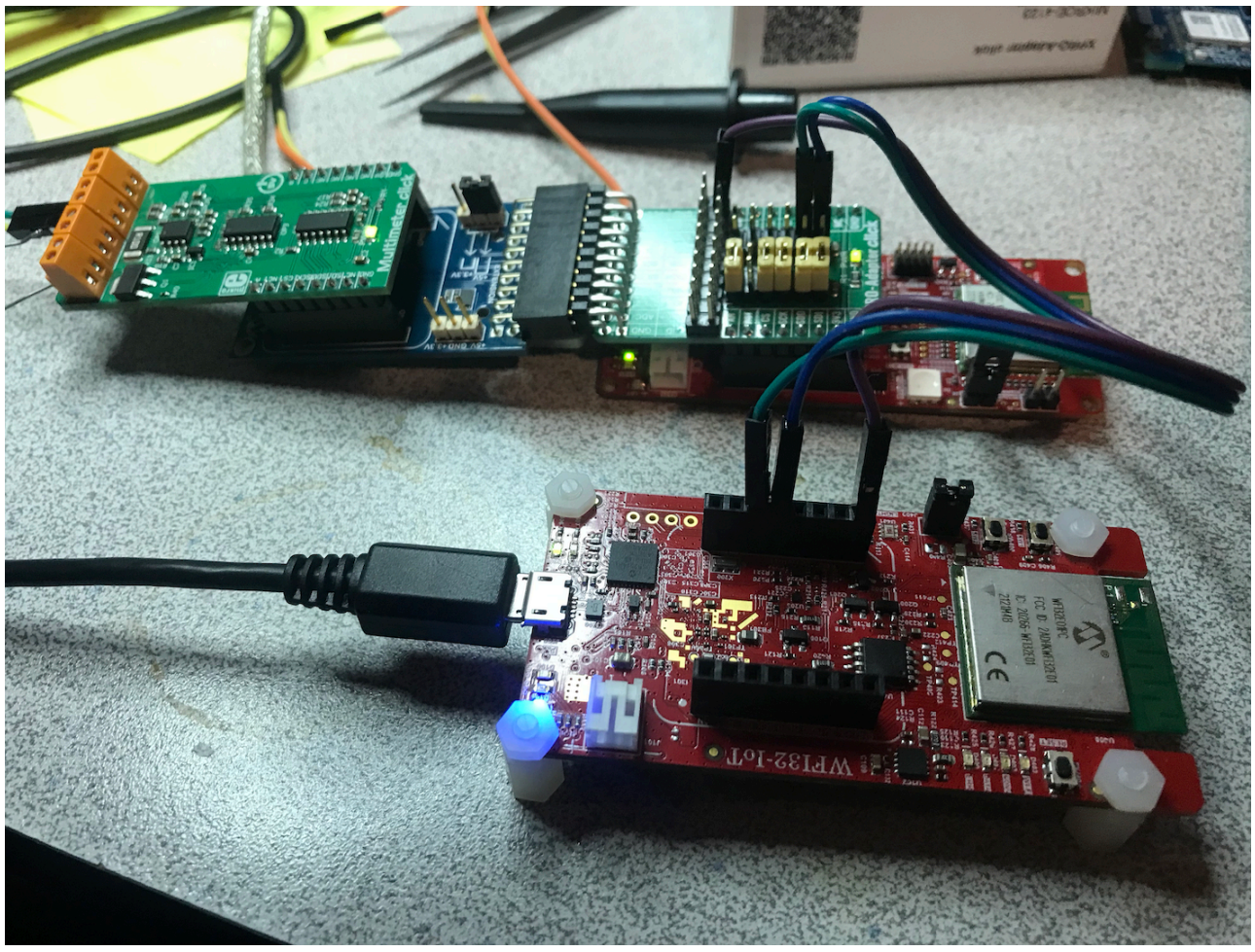

GREEN is TX of WFI32
BLUE is RX of WFI32

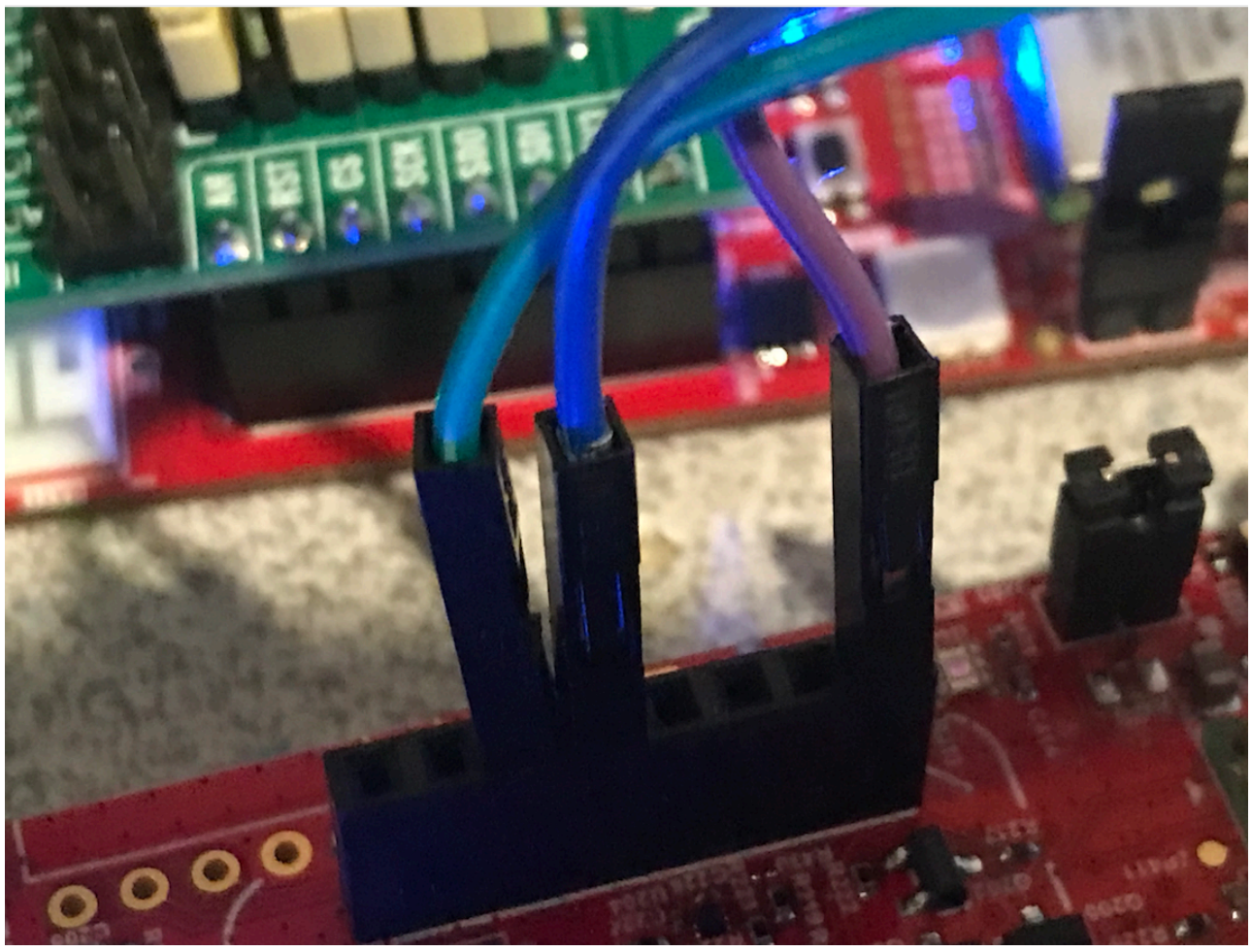

GREEN is SCL of Adaptor
BLUE is SDA of Adaptor

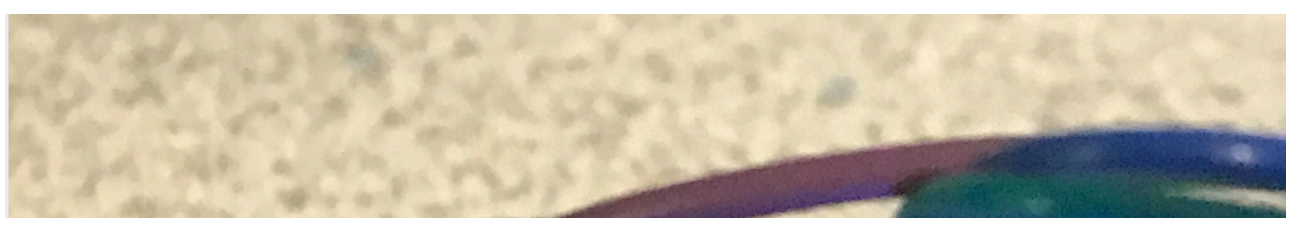

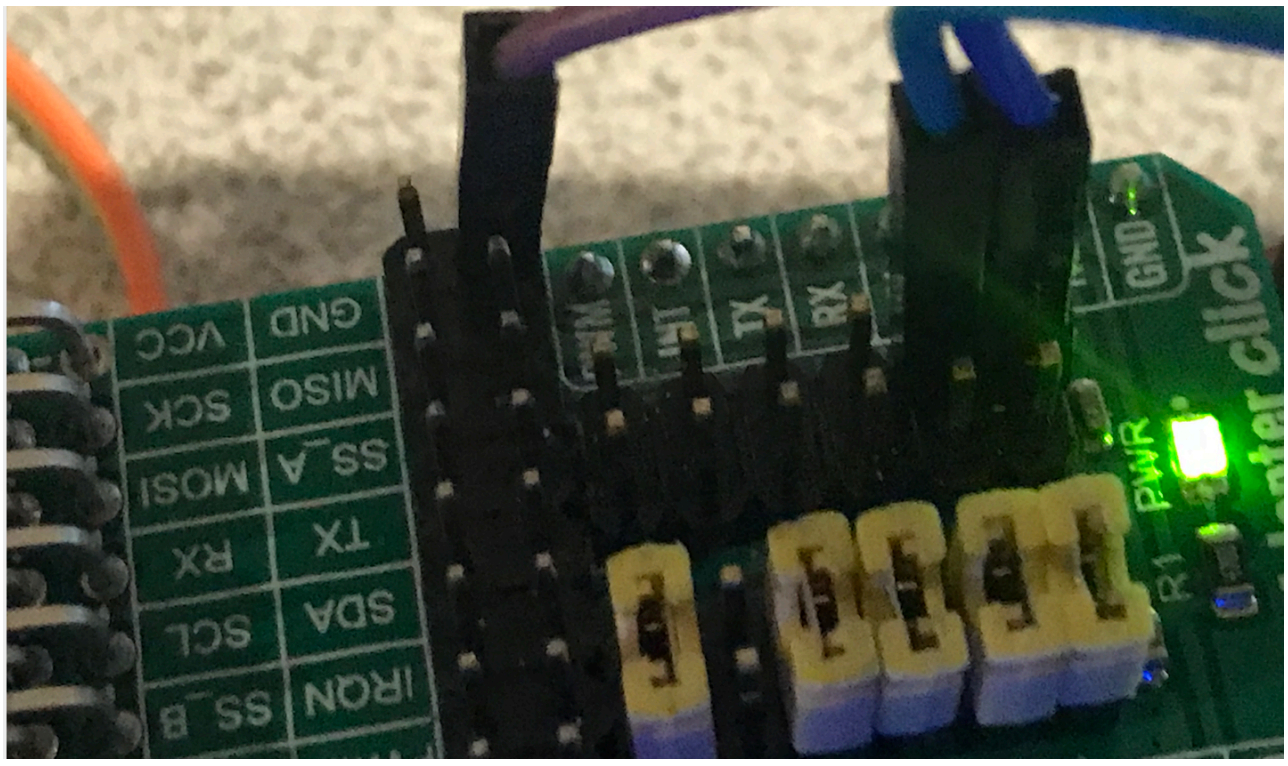
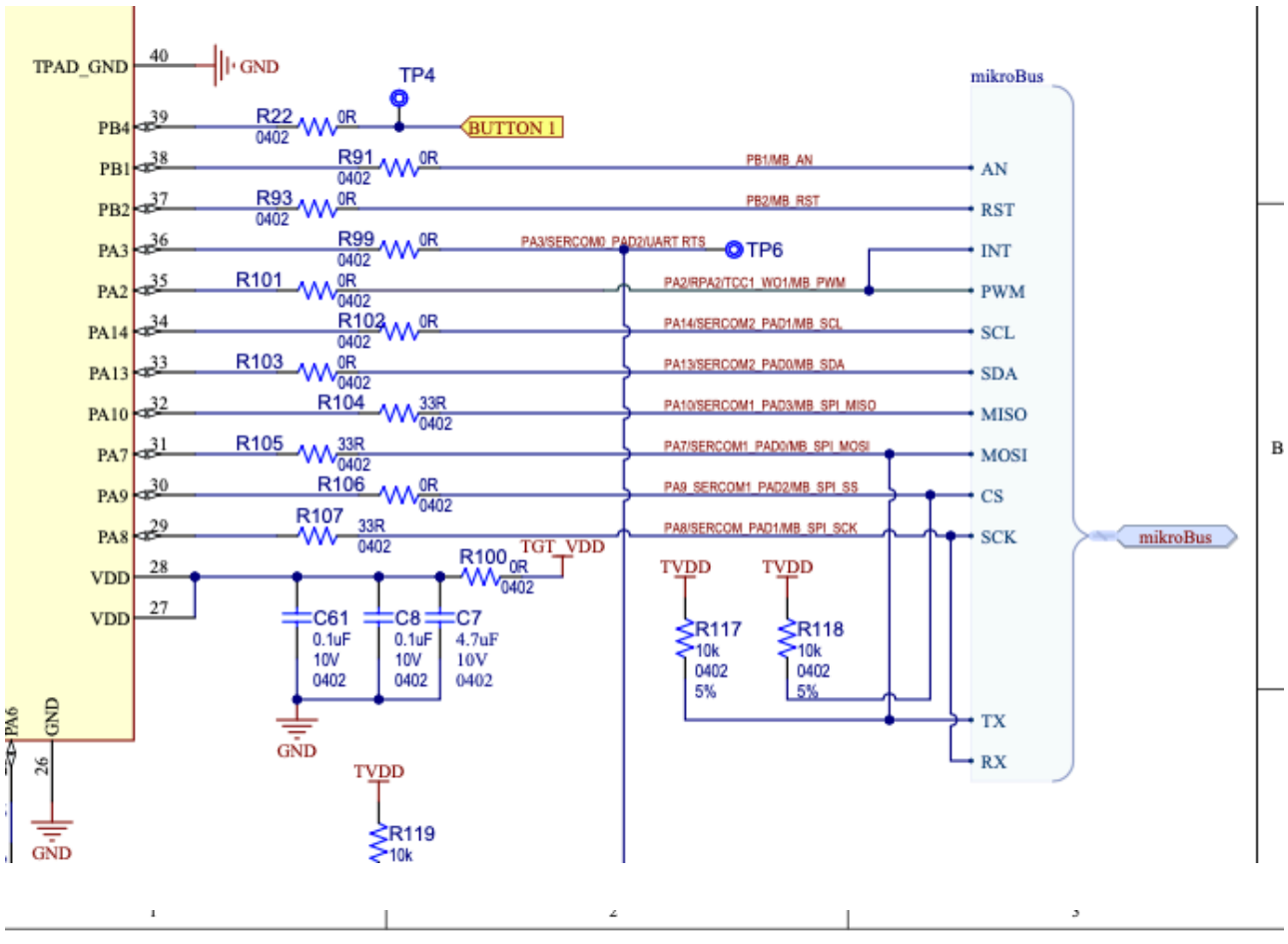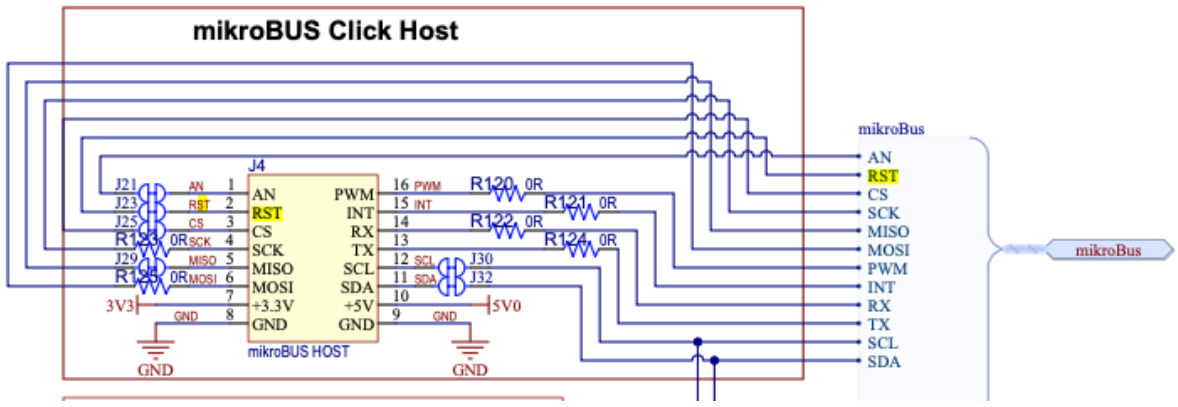
WBZ451 Click connection from schematic