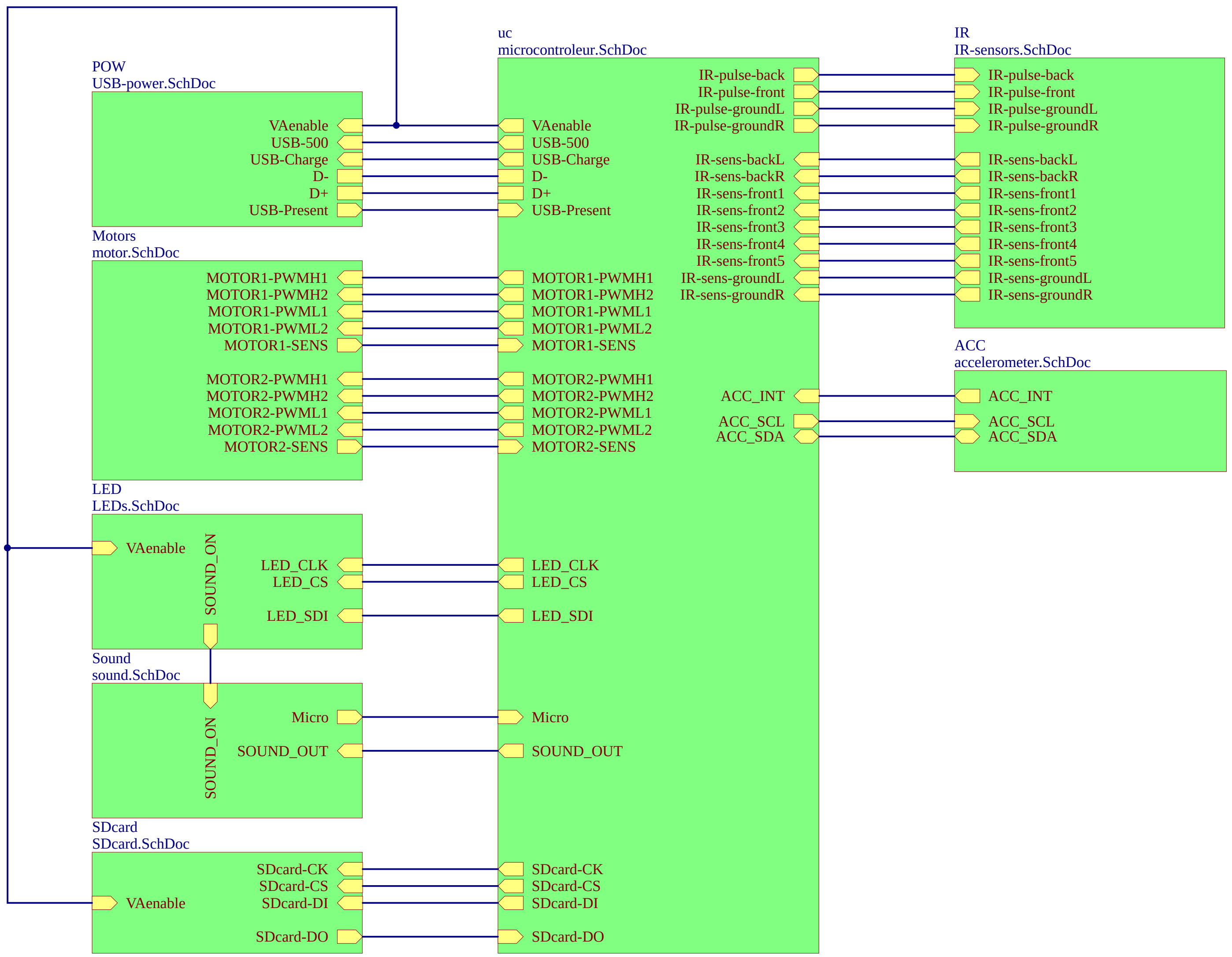
POW
USB-power.SchDoc
VAenable
USB-500
USB-Charge
D-
D+
USB-Present
Motors
motor.SchDoc
MOTOR1-PWMH1
MOTOR1-PWMH2
MOTOR1-PWML1
MOTOR1-PWML2
MOTOR1-SENS
MOTOR2-PWMH1
MOTOR2-PWMH2
MOTOR2-PWML1
MOTOR2-PWML2
MOTOR2-SENS
LED
LEDs.SchDoc
VAenable
SOUND_ON
LED_CLK
LED_CS
LED_SDI
Sound
sound.SchDoc
SOUND_ON
Micro
SOUND_OUT
SDcard
SDcard.SchDoc
VAenable
SDcard-CK
SDcard-CS
SDcard-DI
SDcard-DO
uc
microcontroleur.SchDoc
VAenable
USB-500
USB-Charge
D-
D+
USB-Present
MOTOR1-PWMH1
MOTOR1-PWMH2
MOTOR1-PWML1
MOTOR1-PWML2
MOTOR1-SENS
MOTOR2-PWMH1
MOTOR2-PWMH2
MOTOR2-PWML1
MOTOR2-PWML2
MOTOR2-SENS
LED_CLK
LED_CS
LED_SDI
Micro
SOUND_OUT
SDcard-CK
SDcard-CS
SDcard-DI
SDcard-DO
IR-pulse-back
IR-pulse-front
IR-pulse-groundL
IR-pulse-groundR
IR-sens-backL
IR-sens-backR
IR-sens-front1
IR-sens-front2
IR-sens-front3
IR-sens-front4
IR-sens-front5
IR-sens-groundL
IR-sens-groundR
ACC_INT
ACC_SCL
ACC_SDA
IR
IR-sensors.SchDoc
IR-pulse-back
IR-pulse-front
IR-pulse-groundL
IR-pulse-groundR
IR-sens-backL
IR-sens-backR
IR-sens-front1
IR-sens-front2
IR-sens-front3
IR-sens-front4
IR-sens-front5
IR-sens-groundL
IR-sens-groundR
ACC
accelerometer.SchDoc
ACC_INT
ACC_SCL
ACC_SDA

Project	***thymio2-main.PrjPCB***	Date: 27.12.2018 14:14:49	*Association Mobsya* *Michael Bonani* *Ch. Closel 3* *CH-1020 Renens*
Part	***Thymio2*** ***PCB principal***	Revision: 2.1	
File :	***thymio2-main.SchDoc***	Page 1 de 9	*Original design LSRO-*

mobsya

ÉCOLE POLYTECHNIQUE FÉDÉRALE DE LAUSANNE

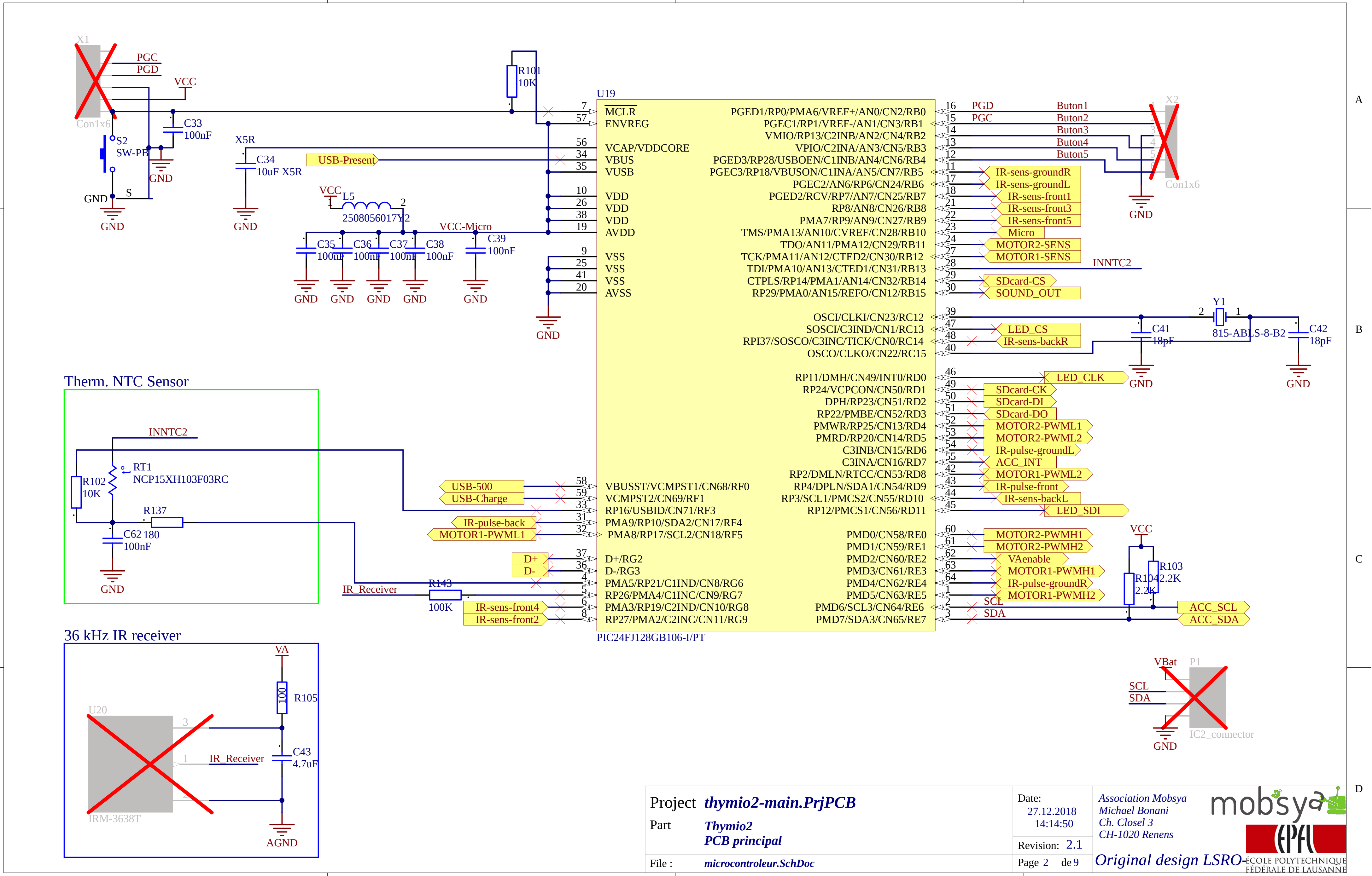
X1
Con1x6
PGC
PGD
VCC
C33
100nF
S2
SW-PB
GND
S
R101
10K
U19
X5R
C34
10uF X5R
USB-Present
VCC
L5
2508056017Y2
VCC-Micro
C35
100nF
C36
100nF
C37
100nF
C38
100nF
C39
100nF
MCLR
ENVREG
VCAP/VDDCORE
VBUS
VUSB
VDD
VDD
VDD
AVDD
VSS
VSS
VSS
AVSS
PGED1/RP0/PMA6/VREF+/AN0/CN2/RB0
PGEC1/RP1/VREF-/AN1/CN3/RB1
VMIO/RP13/C2INB/AN2/CN4/RB2
VPIO/RP28/C2INA/AN3/CN5/RB3
PGED3/RP28/USBOEN/C1INB/AN4/CN6/RB4
PGEC3/RP18/VBUSON/C1INA/AN5/CN7/RB5
PGEC2/AN6/RP6/CN24/RB6
PGED2/RCV/RP7/AN7/CN25/RB7
RP8/AN8/CN26/RB8
PMA7/RP9/AN9/CN27/RB9
TMS/PMA13/AN10/CVREF/CN28/RB10
TDO/AN11/PMA12/CN29/RB11
TCK/PMA11/AN12/CTED2/CN30/RB12
TDI/PMA10/AN13/CTED1/CN31/RB13
CTPLS/RP14/PMA1/AN14/CN32/RB14
RP29/PMA0/AN15/REFO/CN12/RB15
OSCI/CLKI/CN23/RC12
SOSCI/C3IND/CN1/RC13
RPI37/SOSCO/C3INC/TICK/CN0/RC14
OSCO/CLKO/CN22/RC15
RP11/DMH/CN49/INT0/RD0
RP24/VPCON/CN50/RD1
DPH/RP23/CN51/RD2
RP22/PMBE/CN52/RD3
PMWR/RP25/CN13/RD4
PMRD/RP20/CN14/RD5
C3INB/CN15/RD6
C3INA/CN16/RD7
RP2/DMLN/RTCC/CN53/RD8
RP4/DPLN/SDA1/CN54/RD9
RP3/SCL1/PMCS2/CN55/RD10
RP12/PMCS1/CN56/RD11
VBUSST/VCMPST1/CN68/RF0
VCMPST2/CN69/RF1
RP16/USBID/CN71/RF3
PMA9/RP10/SDA2/CN17/RF4
PMA8/RP17/SCL2/CN18/RF5
D+/RG2
D-/RG3
PMA5/RP21/C1IND/CN8/RG6
RP26/PMA4/C1INC/CN9/RG7
PMA3/RP19/C2IND/CN10/RG8
RP27/PMA2/C2INC/CN11/RG9
PMD0/CN58/RE0
PMD1/CN59/RE1
PMD2/CN60/RE2
PMD3/CN61/RE3
PMD4/CN62/RE4
PMD5/CN63/RE5
PMD6/SCL3/CN64/RE6
PMD7/SDA3/CN65/RE7
PIC24FJ128GB106-I/PT
PGD
PGC
Buton1
Buton2
Buton3
Buton4
Buton5
X2
Con1x6
IR-sens-groundR
IR-sens-groundL
IR-sens-front1
IR-sens-front3
IR-sens-front5
Micro
MOTOR2-SENS
MOTOR1-SENS
INNTC2
SDcard-CS
SOUND_OUT
Y1
815-ABLS-8-B2
C41
18pF
C42
18pF
LED_CS
IR-sens-backR
LED_CLK
SDcard-CK
SDcard-DI
SDcard-DO
MOTOR2-PWML1
MOTOR2-PWML2
IR-pulse-groundL
ACC_INT
MOTOR1-PWML2
IR-pulse-front
IR-sens-backL
LED_SDI
MOTOR2-PWMH1
MOTOR2-PWMH2
VAenable
MOTOR1-PWMH1
IR-pulse-groundR
MOTOR1-PWMH2
SCL
SDA
VCC
R103
2.2K
R104
2.2K
ACC_SCL
ACC_SDA
USB-500
USB-Charge
IR-pulse-back
MOTOR1-PWML1
D+
D-
IR_Receiver
R143
100K
IR-sens-front4
IR-sens-front2
Therm. NTC Sensor
INNTC2
RT1
NCP15XH103F03RC
R102
10K
R137
180
C62
100nF
GND
36 kHz IR receiver
VA
R105
100
U20
IRM-3638T
IR_Receiver
C43
4.7uF
AGND
VBat
P1
SCL
SDA
IC2_connector
GND

Project **thymio2-main.PrjPCB**

Part ***Thymio2***
PCB principal

File : ***microcontroleur.SchDoc***

Date: 27.12.2018
14:14:50

Revision: 2.1

Page 2 de 9

Association Mobsya
Michael Bonani
Ch. Closel 3
CH-1020 Renens

Original design LSRO-

mobsya

ÉCOLE POLYTECHNIQUE
FÉDÉRALE DE LAUSANNE

Power good (on when power on plug) no led

stat1 when charging red led

stat2 when charge finished green led

VPCC limit at 4.55V

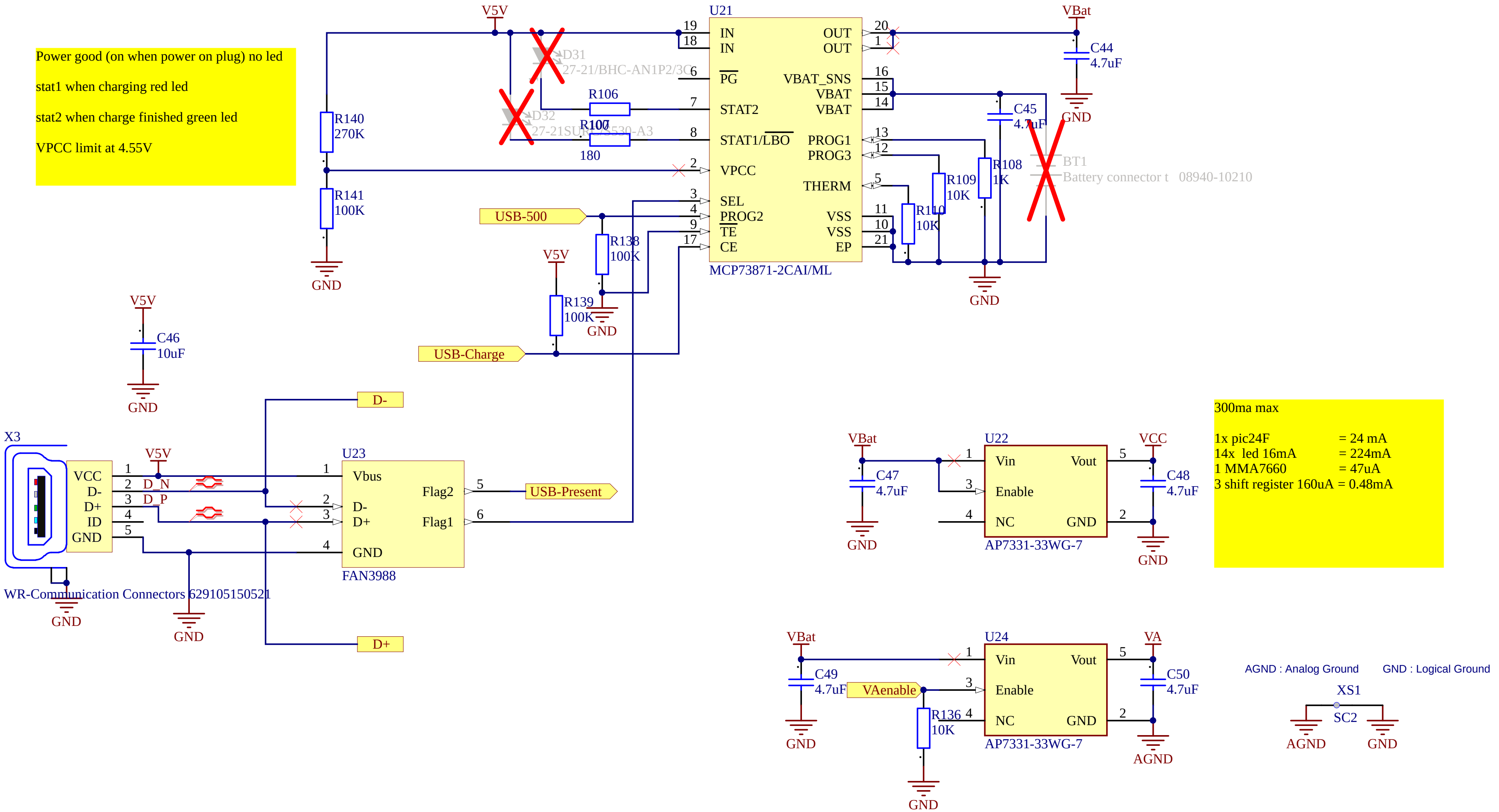
V5V
D31
27-21/BHC-AN1P2/3C
D32
27-21SUR-2530-A3
R106
R107
180
R140
270K
R141
100K
GND
U21
IN
IN
PG
STAT2
STAT1/LBO
VPCC
SEL
PROG2
TE
CE
OUT
OUT
VBAT_SNS
VBAT
VBAT
PROG1
PROG3
THERM
VSS
VSS
EP
MCP73871-2CAI/ML
VBat
C44
4.7uF
C45
4.7uF
R108
1K
R109
10K
R110
10K
BT1
Battery connector t 08940-10210
USB-500
R138
100K
R139
100K
USB-Charge
C46
10uF
X3
VCC
D-
D+
ID
GND
D_N
D_P
WR-Communication Connectors 629105150521
U23
Vbus
D-
D+
GND
Flag2
Flag1
FAN3988
USB-Present
D-
D+
U22
Vin
Enable
NC
Vout
GND
AP7331-33WG-7
VCC
C47
4.7uF
C48
4.7uF
U24
Vin
Enable
NC
Vout
GND
AP7331-33WG-7
VA
C49
4.7uF
VAenable
R136
10K
C50
4.7uF
AGND
XS1
SC2

300ma max

1x pic24F = 24 mA
14x led 16mA = 224mA
1 MMA7660 = 47uA
3 shift register 160uA = 0.48mA

AGND : Analog Ground GND : Logical Ground

Project *thymio2-main.PrjPCB*

Part *Thymio2*
PCB principal

File : *USB-power.SchDoc*

Date:
27.12.2018
14:14:50

Revision: 2.1

Page 3 de 9

Association Mobsya
Michael Bonani
Ch. Closel 3
CH-1020 Renens

mobsya

Original design LSRO-EPFL

ÉCOLE POLYTECHNIQUE
FÉDÉRALE DE LAUSANNE

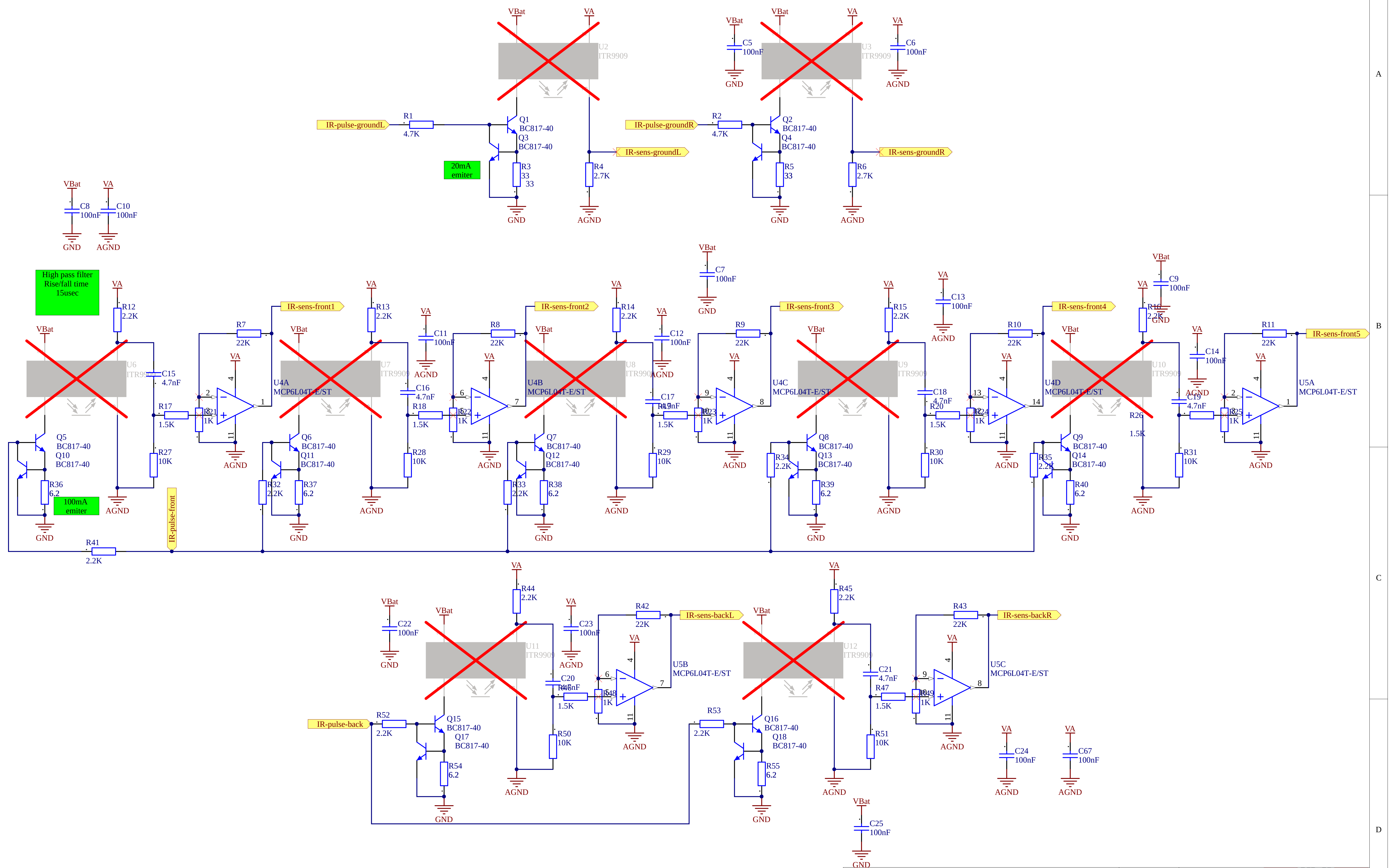
VBat
VA
U2
ITR9909
U3
ITR9909
IR-pulse-groundL
R1
4.7K
Q1
BC817-40
Q3
BC817-40
R3
33
33
20mA emiter
IR-sens-groundL
R4
2.7K
GND
AGND
C5
100nF
C6
100nF
IR-pulse-groundR
R2
4.7K
Q2
BC817-40
Q4
BC817-40
R5
33
IR-sens-groundR
R6
2.7K
C8
100nF
C10
100nF
High pass filter
Rise/fall time
15usec
R12
2.2K
U6
ITR9909
C15
4.7nF
R17
1.5K
R21
1K
R27
10K
Q5
BC817-40
Q10
BC817-40
R36
6.2
100mA emiter
R7
22K
IR-sens-front1
U4A
MCP6L04T-E/ST
U7
ITR9909
R13
2.2K
C11
100nF
C16
4.7nF
R18
1.5K
R22
1K
R28
10K
Q6
BC817-40
Q11
BC817-40
R32
2.2K
R37
6.2
R8
22K
IR-sens-front2
U4B
MCP6L04T-E/ST
U8
ITR9909
R14
2.2K
C12
100nF
C17
4.7nF
R19
1.5K
R23
1K
R29
10K
Q7
BC817-40
Q12
BC817-40
R33
2.2K
R38
6.2
C7
100nF
R9
22K
IR-sens-front3
U4C
MCP6L04T-E/ST
U9
ITR9909
R15
2.2K
C13
100nF
C18
4.7nF
R20
1.5K
R24
1K
R30
10K
Q8
BC817-40
Q13
BC817-40
R34
2.2K
R39
6.2
R10
22K
IR-sens-front4
U4D
MCP6L04T-E/ST
U10
ITR9909
R16
2.2K
C9
100nF
C14
100nF
C19
4.7nF
R26
1.5K
R25
1K
R31
10K
Q9
BC817-40
Q14
BC817-40
R35
2.2K
R40
6.2
R11
22K
IR-sens-front5
U5A
MCP6L04T-E/ST
IR-pulse-front
R41
2.2K
C22
100nF
R44
2.2K
U11
ITR9909
C23
100nF
C20
4.7nF
R46
1.5K
R48
1K
R50
10K
R42
22K
IR-sens-backL
U5B
MCP6L04T-E/ST
IR-pulse-back
R52
2.2K
Q15
BC817-40
Q17
BC817-40
R54
6.2
R45
2.2K
U12
ITR9909
C21
4.7nF
R47
1.5K
R49
1K
R51
10K
R43
22K
IR-sens-backR
U5C
MCP6L04T-E/ST
R53
2.2K
Q16
BC817-40
Q18
BC817-40
R55
6.2
C24
100nF
C67
100nF
C25
100nF
1
2
3
4
5
6
7
8
A
B
C
D

Project *thymio2-main.PrjPCB*

Part *Thymio2*
PCB principal

File : *IR-sensors.SchDoc*

Date:
27.12.2018
14:14:50

Revision: 2.1

Page 4 de 9

Association Mobsya
Michael Bonani
Ch. Closel 3
CH-1020 Renens

ÉCOLE POLYTECHNIQUE FÉDÉRALE DE LAUSANNE

Original design LSRO-STI-EPFL

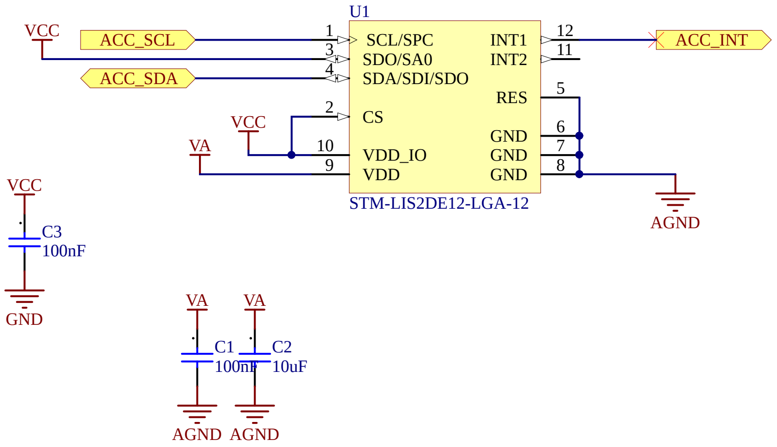
U1
STM-LIS2DE12-LGA-12
SCL/SPC
SDO/SA0
SDA/SDI/SDO
CS
VDD_IO
VDD
INT1
INT2
RES
GND
GND
GND
1
3
4
2
10
9
12
11
5
6
7
8
VCC
ACC_SCL
ACC_SDA
VCC
VA
ACC_INT
AGND
VCC
C3
100nF
GND
VA
VA
C1
100nF
C2
10uF
AGND
AGND

Project *thymio2-main.PrjPCB*

Part *Thymio2*
PCB principal

File : *accelerometer.SchDoc*

Date:
27.12.2018
14:14:50

Revision: 2.1

Page 5 de 9

Association Mobsya
Michael Bonani
Ch. Closel 3
CH-1020 Renens

Original design LSRO-

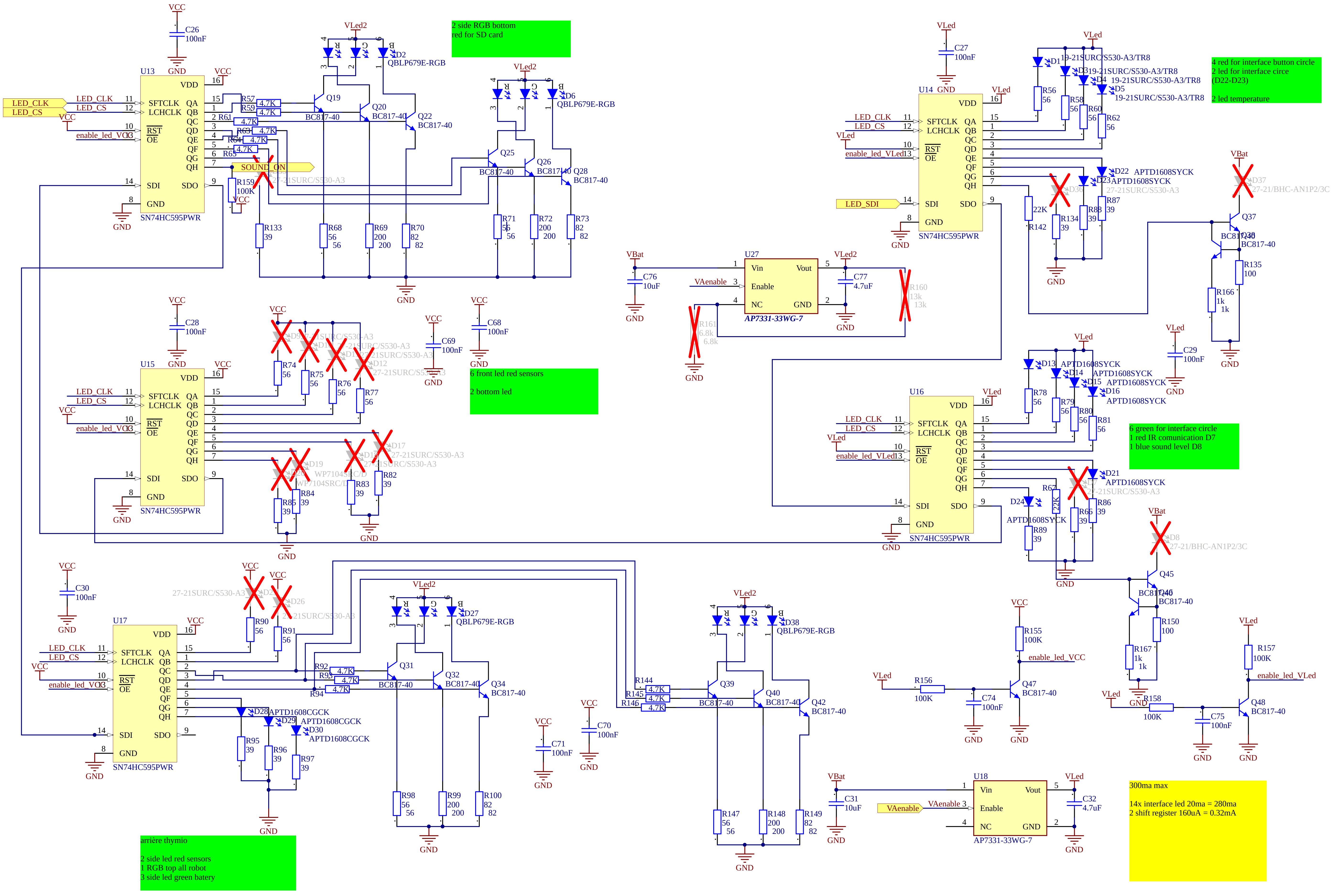
1
2
3
4
5
6
7
8
A
B
C
D
U13
SN74HC595PWR
U14
SN74HC595PWR
U15
SN74HC595PWR
U16
SN74HC595PWR
U17
SN74HC595PWR
U27
AP7331-33WG-7
U18
AP7331-33WG-7
VDD
SFTCLK
LCHCLK
RST
OE
SDI
SDO
GND
QA
QB
QC
QD
QE
QF
QG
QH
Vin
Vout
Enable
NC
VCC
VLed
VLed2
VBat
VAenable
LED_CLK
LED_CS
LED_SDI
enable_led_VCC
enable_led_VLed
SOUND_ON
C26 100nF
C27 100nF
C28 100nF
C29 100nF
C30 100nF
C31 10uF
C32 4.7uF
C68 100nF
C69 100nF
C70 100nF
C71 100nF
C74 100nF
C75 100nF
C76 10uF
C77 4.7uF
D2 QBLP679E-RGB
D6 QBLP679E-RGB
D27 QBLP679E-RGB
D38 QBLP679E-RGB
D1 19-21SURC/S530-A3/TR8
D3 19-21SURC/S530-A3/TR8
D4 19-21SURC/S530-A3/TR8
D5 19-21SURC/S530-A3/TR8
D13 APTD1608SYCK
D14 APTD1608SYCK
D15 APTD1608SYCK
D16 APTD1608SYCK
D21 APTD1608SYCK
D22 APTD1608SYCK
D23 APTD1608SYCK
D24 APTD1608SYCK
D28 APTD1608CGCK
D29 APTD1608CGCK
D30 APTD1608CGCK
D7 27-21SURC/S530-A3
D8 27-21/BHC-AN1P2/3C
D37 27-21/BHC-AN1P2/3C
D19 WP7104SRC/D
D20 WP7104SRC/D
Q19
Q20
Q22
Q25
Q26
Q28
Q31
Q32
Q34
Q37
Q38
Q39
Q40
Q42
Q45
Q46
Q47
Q48
BC817-40
R57 4.7K
R59 4.7K
R61 4.7K
R63 4.7K
R64 4.7K
R65 4.7K
R159 100K
R133 39
R68 56
R69 200
R70 82
R71 56
R72 200
R73 82
R74 56
R75 56
R76 56
R77 56
R82 39
R83 39
R84 39
R85 39
R90 56
R91 56
R92 4.7K
R93 4.7K
R94 4.7K
R95 39
R96 39
R97 39
R98 56
R99 200
R100 82
R56 56
R58 56
R60 56
R62 56
R87 39
R88 39
R134 39
R142 22K
R135 100
R166 1k
R160 13k
R161 6.8k
R78 56
R79 56
R80 56
R81 56
R86 39
R66 39
R67 22K
R89 39
R150 100
R167 1k
R155 100K
R156 100K
R157 100K
R158 100K
R144 4.7K
R145 4.7K
R146 4.7K
R147 56
R148 200
R149 82

2 side RGB bottom
red for SD card

4 red for interface button circle
2 led for interface circe
(D22-D23)

2 led temperature

6 front led red sensors

2 bottom led

6 green for interface circle
1 red IR comunication D7
1 blue sound level D8

arrière thymio

2 side led red sensors
1 RGB top all robot
3 side led green batery

300ma max

14x interface led 20ma = 280ma
2 shift register 160uA = 0.32mA

Project	***thymio2-main.PrjPCB***	Date: 27.12.2018 14:14:50	*Association Mobsya* *Michael Bonani* *Ch. Closel 3* *CH-1020 Renens*
Part	***Thymio2*** ***PCB principal***	Revision: 2.1	ÉCOLE POLYTECHNIQUE FÉDÉRALE DE LAUSANNE
File :	***LEDs.SchDoc***	Page 6 de 9	*Original design LSRO-STI-EPFL*

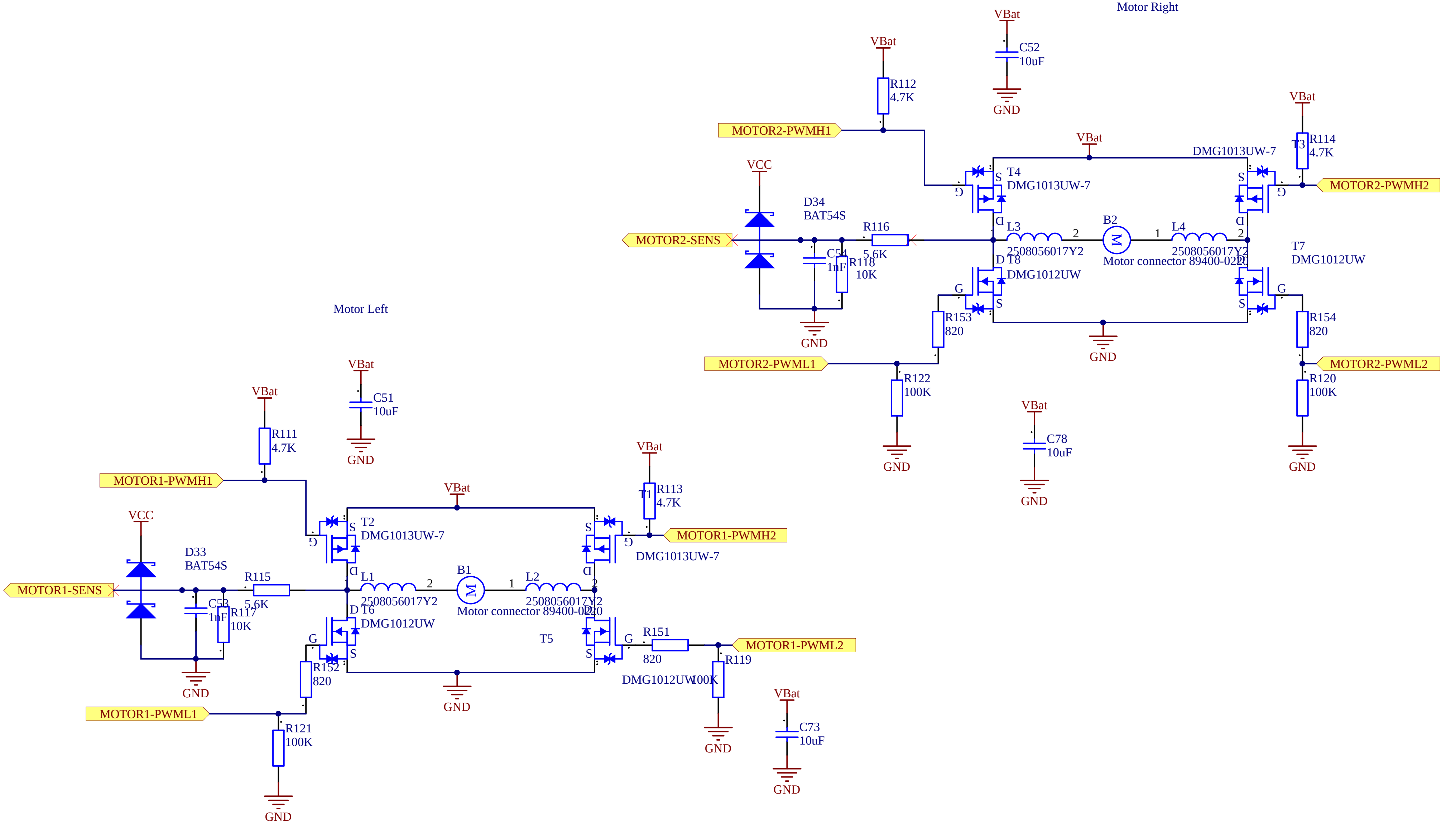
Motor Right
Motor Left
VBat
C52
10uF
GND
R112
4.7K
MOTOR2-PWMH1
VBat
T4
DMG1013UW-7
S
G
D
DMG1013UW-7
T3
R114
4.7K
MOTOR2-PWMH2
VCC
D34
BAT54S
R116
5.6K
MOTOR2-SENS
C54
1nF
R118
10K
L3
2508056017Y2
B2
M
Motor connector 89400-0220
L4
2508056017Y2
T8
DMG1012UW
T7
DMG1012UW
R153
820
R154
820
MOTOR2-PWML1
MOTOR2-PWML2
R122
100K
R120
100K
C78
10uF
R111
4.7K
MOTOR1-PWMH1
C51
10uF
T2
DMG1013UW-7
R113
4.7K
T1
MOTOR1-PWMH2
DMG1013UW-7
D33
BAT54S
R115
5.6K
MOTOR1-SENS
C53
1nF
R117
10K
L1
2508056017Y2
B1
Motor connector 89400-0220
L2
2508056017Y2
T6
DMG1012UW
T5
R151
820
MOTOR1-PWML2
R119
100K
DMG1012UW
R152
820
MOTOR1-PWML1
R121
100K
C73
10uF

Project **thymio2-main.PrjPCB**

Part ***Thymio2***
PCB principal

File : ***motor.SchDoc***

Date:
27.12.2018
14:14:50

Revision: 2.1

Page 7 de 9

Association Mobsya
Michael Bonani
Ch. Closel 3
CH-1020 Renens

Original design LSRO-

ÉCOLE POLYTECHNIQUE
FÉDÉRALE DE LAUSANNE

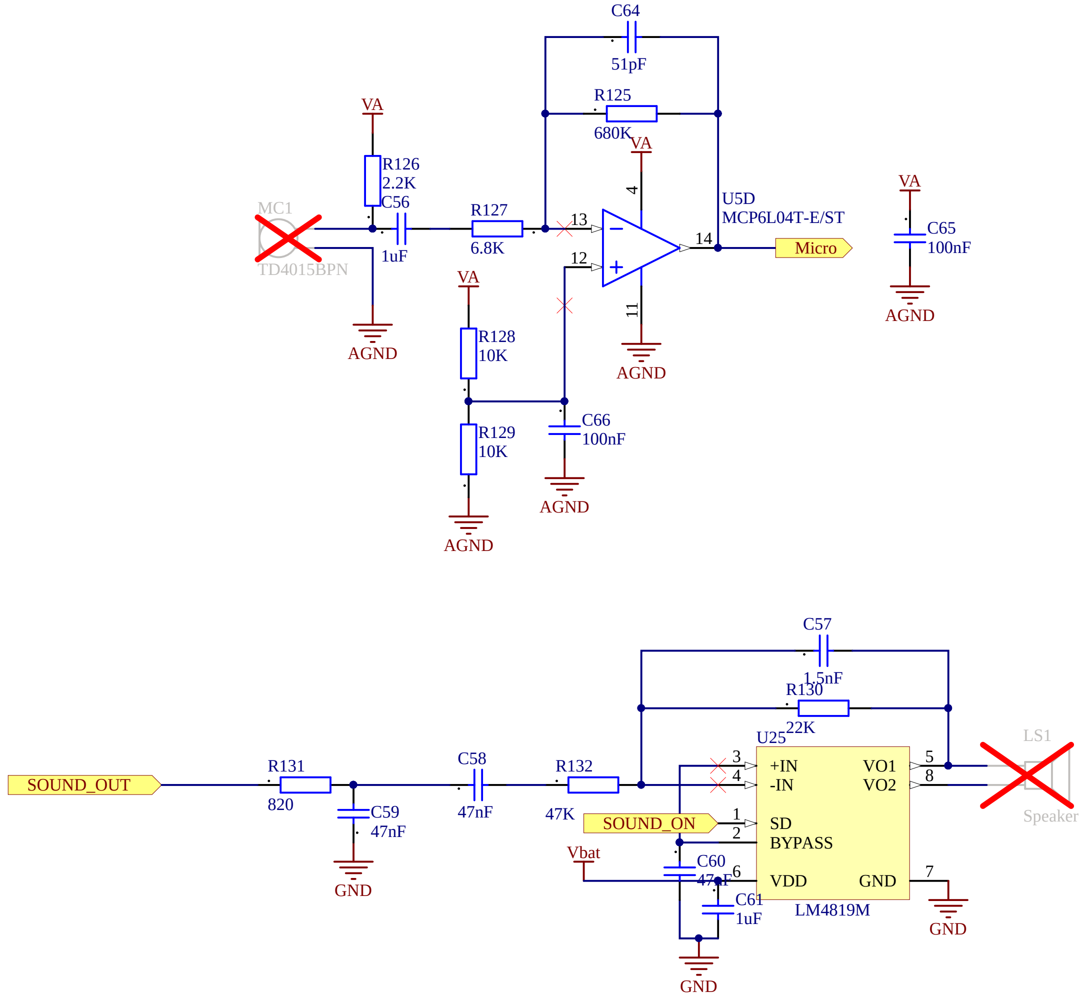
C64
51pF
R125
680K
VA
R126
2.2K
C56
1uF
MC1
TD4015BPN
R127
6.8K
13
12
4
11
14
U5D
MCP6L04T-E/ST
Micro
AGND
VA
R128
10K
R129
10K
C66
100nF
AGND
AGND
AGND
VA
C65
100nF
AGND
C57
1.5nF
R130
22K
U25
LS1
Speaker
SOUND_OUT
R131
820
C59
47nF
GND
C58
47nF
R132
47K
SOUND_ON
Vbat
C60
47nF
C61
1uF
GND
3
4
1
2
6
5
8
7
+IN
-IN
SD
BYPASS
VDD
VO1
VO2
GND
LM4819M
GND

Project ***thymio2-main.PrjPCB***

Part ***Thymio2***
PCB principal

File : ***sound.SchDoc***

Date:
27.12.2018
14:14:51

Revision: 2.1

Page 8 de 9

Association Mobsya
Michael Bonani
Ch. Closel 3
CH-1020 Renens

Original design LSRO-

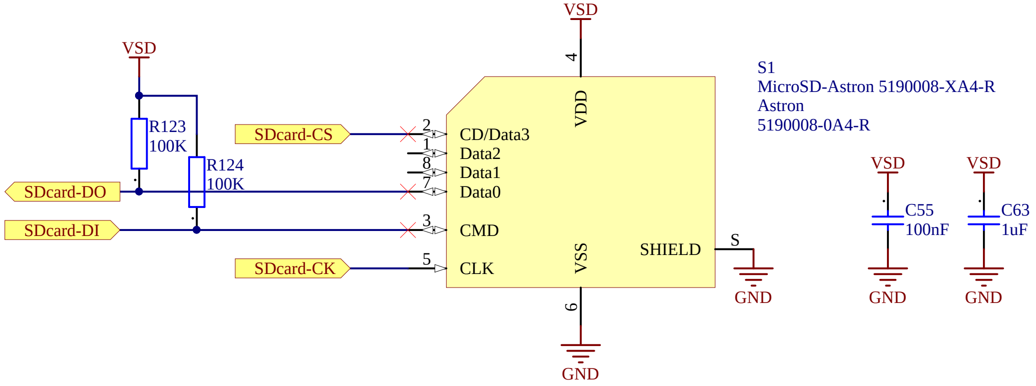
VSD
4
VDD
S1
MicroSD-Astron 5190008-XA4-R
Astron
5190008-0A4-R
VSD
R123
100K
R124
100K
SDcard-CS
2
CD/Data3
1
Data2
8
Data1
SDcard-DO
7
Data0
SDcard-DI
3
CMD
SDcard-CK
5
CLK
VSS
SHIELD
S
GND
6
GND
VSD
C55
100nF
GND
VSD
C63
1uF
GND

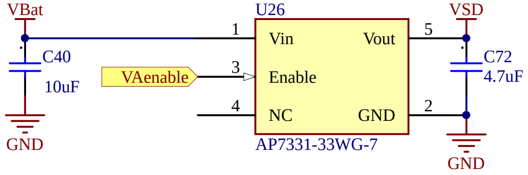
VBat
C40
10uF
GND
U26
1
Vin
VAenable
3
Enable
4
NC
Vout
5
GND
2
AP7331-33WG-7
VSD
C72
4.7uF
GND

Project *thymio2-main.PrjPCB*

Part *Thymio2*
PCB principal

File : *SDcard.SchDoc*

Date: 27.12.2018 14:14:51

Revision: 2.1

Page 9 de 9

Association Mobsya
Michael Bonani
Ch. Closel 3
CH-1020 Renens

Original design LSRO-

mobsya

ÉCOLE POLYTECHNIQUE
FÉDÉRALE DE LAUSANNE

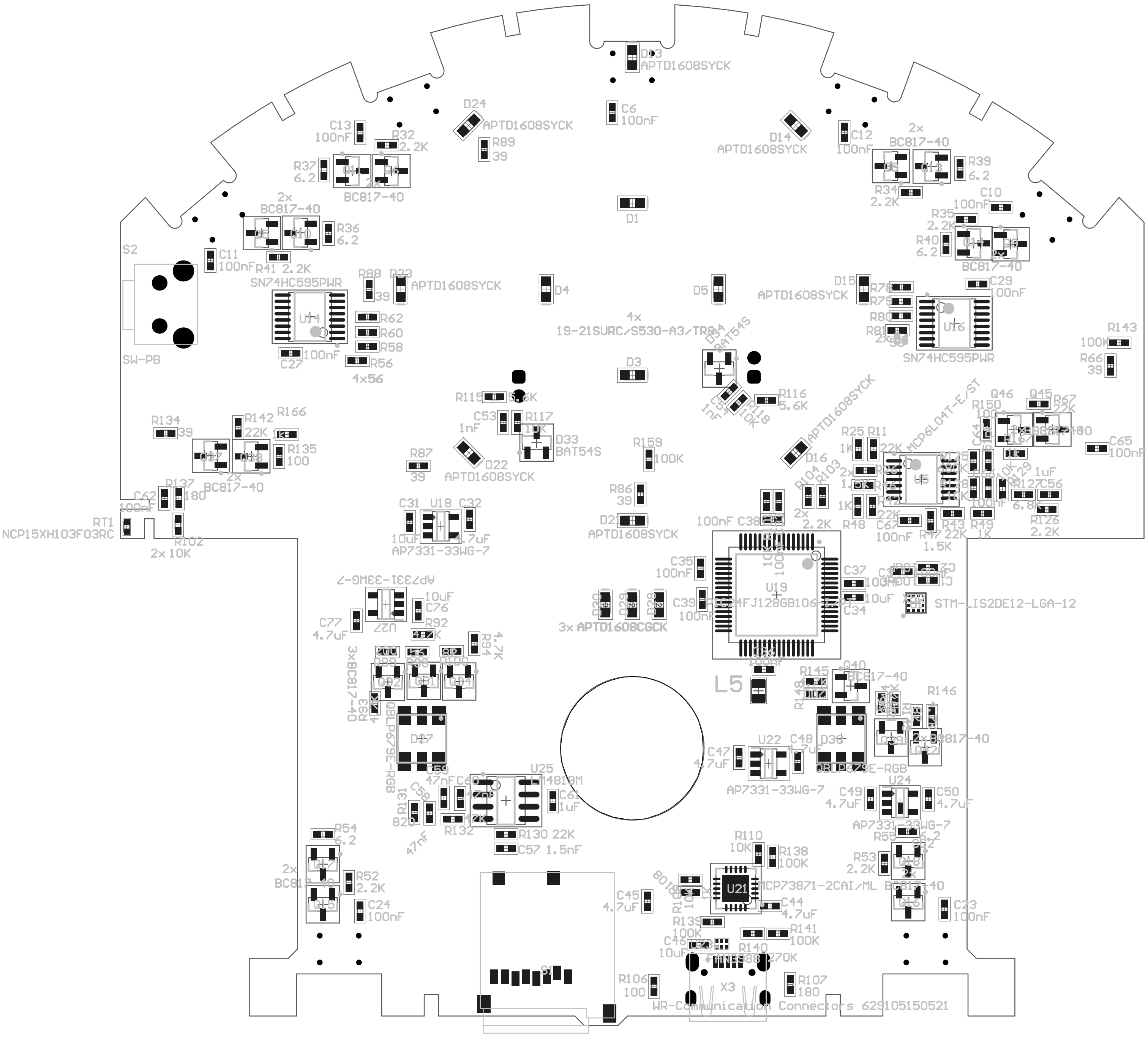
D13
APTD1608SYCK
C6
100nF
D24
APTD1608SYCK
D14
APTD1608SYCK
C13
100nF
R32
2.2K
R89
39
C12
100nF
2x
BC817-40
R37
6.2
2x
BC817-40
R39
6.2
R34
2.2K
C10
100nF
D1
2x
BC817-40
R36
6.2
R35
2.2K
R40
6.2
2x
BC817-40
S2
C11
100nF
R41 2.2K
R88
39
D23
APTD1608SYCK
D4
D5
D15
APTD1608SYCK
R78
R79
R80
R81
C29
100nF
SN74HC595PWR
U14
U16
SN74HC595PWR
R62
R60
R58
R56
4x56
C27
100nF
4x
19-21SURC/S530-A3/TR8
D34
BAT54S
R143
100K
SW-PB
D3
R66
39
R115
5.6K
C54
1nF
R118
10K
R116
5.6K
D16
APTD1608SYCK
MCP6L04T-E/ST
Q46
Q45
R67
22K
R150
100
C53
1nF
R117
10K
D33
BAT54S
R134
39
R142
22K
R166
1K
R135
100
R159
100K
R25
1K
R11
22K
C64
C65
100nF
D22
APTD1608SYCK
R87
39
2x
BC817-40
U5
R127
6.8K
C56
R137
180
C62
100nF
R86
39
R104
R103
2x
2.2K
1.5K
1K
R48
22K
C67
100nF
R47
1.5K
R43
22K
R49
1K
R126
2.2K
RT1
NCP15XH103F03RC
R102
2x 10K
C31
U18
C32
10uF
4.7uF
AP7331-33WG-7
D21
APTD1608SYCK
100nF C38
C35
100nF
U19
PIC24FJ128GB106-I/PT
C39
100nF
C37
100nF
C34
10uF
STM-LIS2DE12-LGA-12
AP7331-33WG-7
U27
10uF
C76
C77
4.7uF
R92
4.7K
R94
4.7K
3x APTD1608CGCK
3xBC817-40
R93
4.7K
C36
100nF
L5
R145
R148
Q40
BC817-40
R146
2x BC817-40
QBLP679E-RGB
D37
QBLP679E-RGB
D38
U22
C47
4.7uF
C48
4.7uF
AP7331-33WG-7
U25
LM4819M
C59
47nF
C60
C61
1uF
R131
820
C58
47nF
R132
R130 22K
C57 1.5nF
U24
C49
4.7uF
C50
4.7uF
AP7331-33WG-7
R55
6.2
R53
2.2K
2x
BC817-40
R54
6.2
2x
BC817-40
R52
2.2K
C24
100nF
R110
10K
R138
100K
U21
MCP73871-2CAI/ML
C45
4.7uF
C44
4.7uF
R139
100K
R141
100K
C46
10uF
R140
270K
C23
100nF
S1
R106
100
X3
R107
180
WR-Communication Connectors 629105150521
MicroSD-Astron 5190008-XA4-R

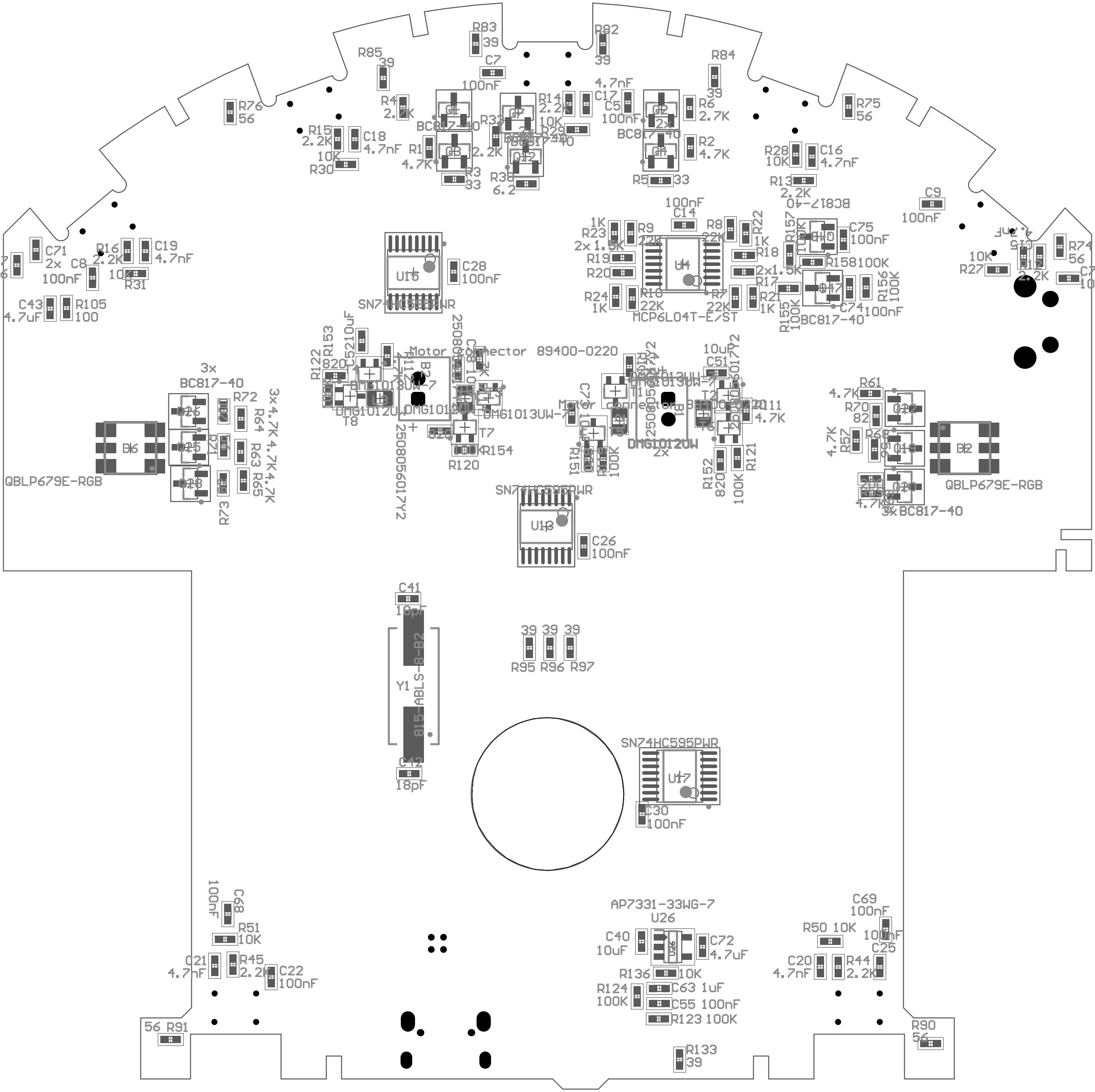
R83
39
R82
39
R85
39
R84
39
C7
100nF
4.7nF
C17
C5
100nF
R4
2.2K
R14
2.2K
10K
R6
2.7K
BC817-40
R76
56
R75
56
R15
2.2K
C18
4.7nF
10K
R30
R1
4.7K
2.2K
R3
33
R38
6.2
R2
4.7K
R5
33
R28
10K
C16
4.7nF
R13
2.2K
C9
100nF
R77
56
C71
2x
100nF
C8
R16
2.2K
10K
R31
C19
4.7nF
C43
4.7uF
R105
100
U15
C28
100nF
SN74HC595PWR
100nF
C14
1K
R23
2x 1.5K
R9
22K
R8
22K
R22
1K
R19
R20
U4
R18
2x1.5K
R17
R24
1K
R16
22K
R7
22K
R21
1K
MCP6L04T-E/ST
C75
100nF
R158
100K
R156
100K
R155
100K
C74
100nF
BC817-40
R74
56
10K
R27
C70
100nF
2.2K
Motor Connector 89400-0220
2508056017Y2
R153
R122
820
C52
10uF
DMG1013UW-7
DMG1012UW
T8
B2
T7
R120
R154
10uF
C51
T1
T2
B1
DMG1012UW
2x
R111
4.7K
R151
100K
R152
820
100K
R121
3x
BC817-40
R72
R64
R63
R65
R73
3x 4.7K 4.7K 4.7K
D6
QBLP679E-RGB
R61
4.7K
R70
82
4.7K
R57
R68
D2
QBLP679E-RGB
4.7K
3x BC817-40
SN74HC595PWR
U13
C26
100nF
C41
18pF
815-ABLS-8-B2
Y1
C42
18pF
39
39
39
R95
R96
R97
SN74HC595PWR
U17
C30
100nF
C68
100nF
R51
10K
C21
4.7nF
R45
2.2K
C22
100nF
AP7331-33WG-7
U26
C40
10uF
C72
4.7uF
R136
10K
R124
100K
C63 1uF
C55 100nF
R123 100K
C69
100nF
R50 10K
100nF
C25
C20
4.7nF
R44
2.2K
56 R91
R90
56
R133
39

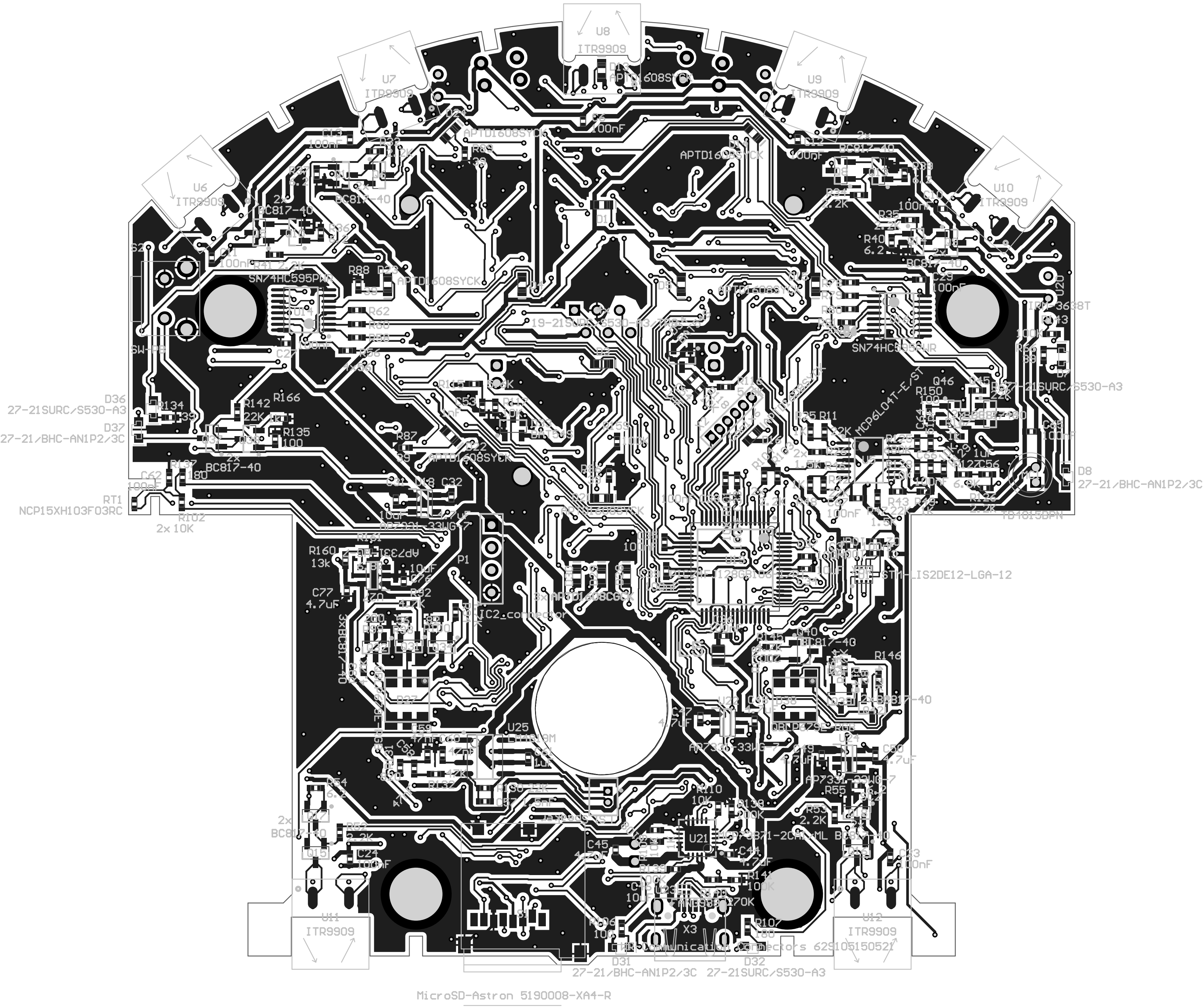
U8
ITR9909
D13
APTD1608SYCK
U7
ITR9909
U9
ITR9909
U6
ITR9909
U10
ITR9909
C13
100nF
C5
100nF
C12
100nF
APTD1608SYCK
R89
39
R32
2.2K
R37
6.2
2x
BC817-40
R36
C1
100nF
R41 2.2K
SN74HC595PWR
R88
39
D28
APTD1608SYCK
U14
R62
R60
R58
R56
C27
100nF
S2
SW-PB
D1
D6
D4
APTD1608SYCK
R38
R34
2.2K
R35
R40
6.2
C10
100nF
C29
100nF
R78
R79
R80
R81
SN74HC595PWR
U20
IRM-3638T
R43
100K
R66
39
D7
27-21SURC/S530-A3
19-21SURC/S530-A3/TR8
D36
27-21SURC/S530-A3
D37
27-21/BHC-AN1P2/3C
R134
39
R142
22K
R166
R135
100
2x
BC817-40
R167
180
C62
100nF
RT1
NCP15XH103F03RC
R102
2x 10K
R115
R17
C53
D19
BAT54S
R87
39
D22
APTD1608SYCK
D18
C32
10uF
4.7uF
AP7331-33WG-7
P1
R161
R160
13k
AP7331
10uF
C76
C77
4.7uF
R92
3xBC817-40
IC2_connector
3x APTD1608CGCK
D27
U25
C59
47nF
C58
C61
1uF
R54
6.2
2x
BC817-40
Q15
R52
2.2K
C24
100nF
U11
ITR9909
S1
R130 22K
R110
10K
R138
100K
U21
MCP73871-2CAI/ML
C45
4.7uF
C44
4.7uF
R139
100K
C46
10uF
X3
R141
100K
R140
270K
R106
100
R107
180
D31
27-21/BHC-AN1P2/3C
D32
27-21SURC/S530-A3
IR Communication Connectors 62S10515052
U12
ITR9909
C23
100nF
R53
2.2K
R55
6.2
BC817-40
AP7331-33WG-7
C50
4.7uF
U24
C49
4.7uF
AP7331-33WG-7
U22
C47
4.7uF
C48
4.7uF
D38
QBLP679E-RGB
2xBC817-40
R146
Q40
BC817-40
R145
U1
STM32L4(?)128GB
100nF
C33
100nF
STM-LIS2DE12-LGA-12
MCP6L04T-E/ST
Q46
R150
100
R11
22K
R25
R26
1.5K
R43
22K
R49
1.5K
C65
100nF
C56
6.8K
R126
2.2K
D8
27-21/BHC-AN1P2/3C
TD4015BPN
MicroSD-Astron 5190008-XA4-R

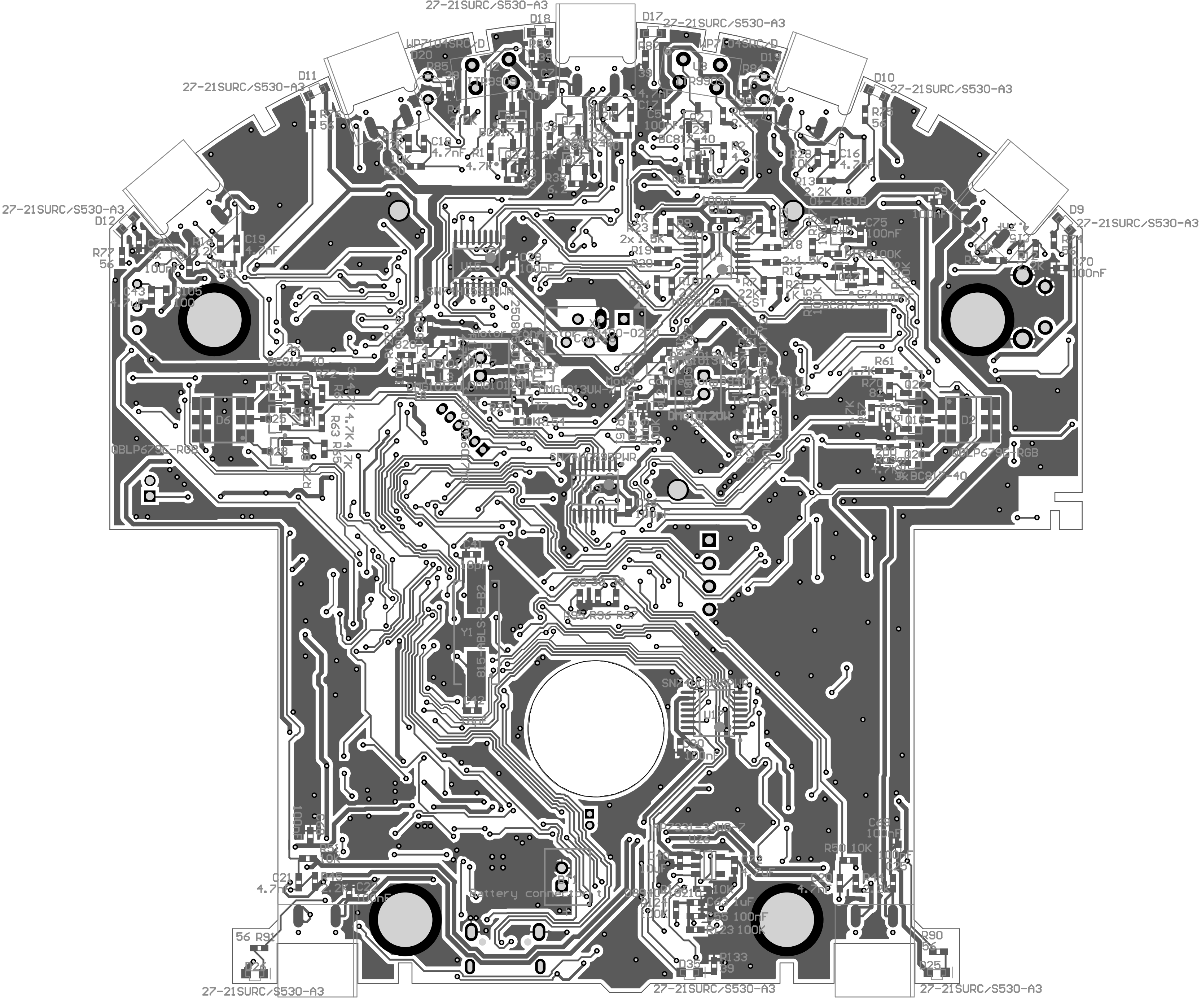
27-21SURC/S530-A3
D18
D17
27-21SURC/S530-A3
WP7104SRC/D
WP7104SRC/D
D20
D19
R85
R84
D11
27-21SURC/S530-A3
D10
27-21SURC/S530-A3
R76
56
R75
56
C18
4.7nF
C16
4.7nF
R1
4.7K
R2
4.7K
R30
10K
R28
10K
R13
2.2K
C5
100nF
C17
4.7nF
R38
6.2
BC817-40
27-21SURC/S530-A3
D12
D9
27-21SURC/S530-A3
R77
56
R74
56
C19
4.7nF
C9
100nF
C75
100nF
C70
100nF
C43
4.7uF
R105
100
C8
100nF
2x1.5K
R23
R19
R20
R17
R21
R7
22K
R9
22K
R8
22K
U4
MC56L04T-6-ST
BC817-40
Motor connector 89400-0220
X1
Motor connector
SN74HC595PWR
U15
U16
SN74HC595PWR
DMG1012UW
DMG1013UW-7
T7
100K
R64
R61
4.7K
R70
82
D6
D2
QBLP679E-RGB
QBLP679E-RGB
3x BC817-40
3x 4.7K
R63
R65
R72
4.7K
4.7K
C41
18pF
C42
18pF
Y1
815-ABLS-8-B2
38
39
39
R92
R96
R97
SN74HC595PWR
U17
R90
100nF
AP7331-30W6-7
U26
C40
10uF
C69
100nF
R50
10K
100nF
C25
R44
2.2K
4.7uF
C21
4.7uF
R45
2.2K
C22
100nF
R51
10K
100nF
C89
Battery connector
BT1
C82
1uF
C85
100nF
R123
100K
R124
100K
56
R91
D24
27-21SURC/S530-A3
D35
R133
39
27-21SURC/S530-A3
R90
56
D25
27-21SURC/S530-A3

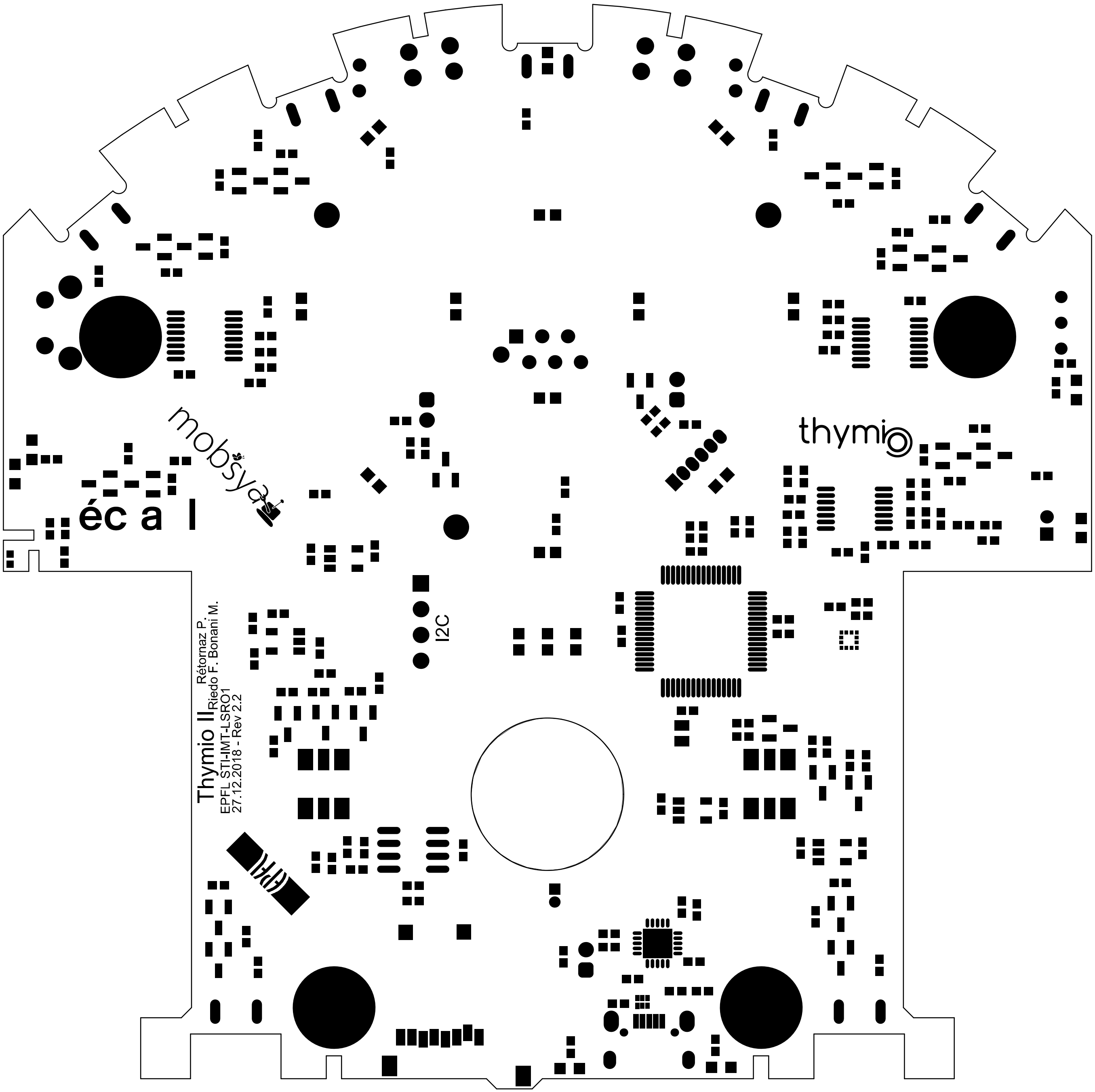
mobsya
écal
thymio
I2C
Thymio II
Rétornaz P.
Riedo F. Bonani M.
EPFL STI-IMT-LSRO1
27.12.2018 - Rev 2.2

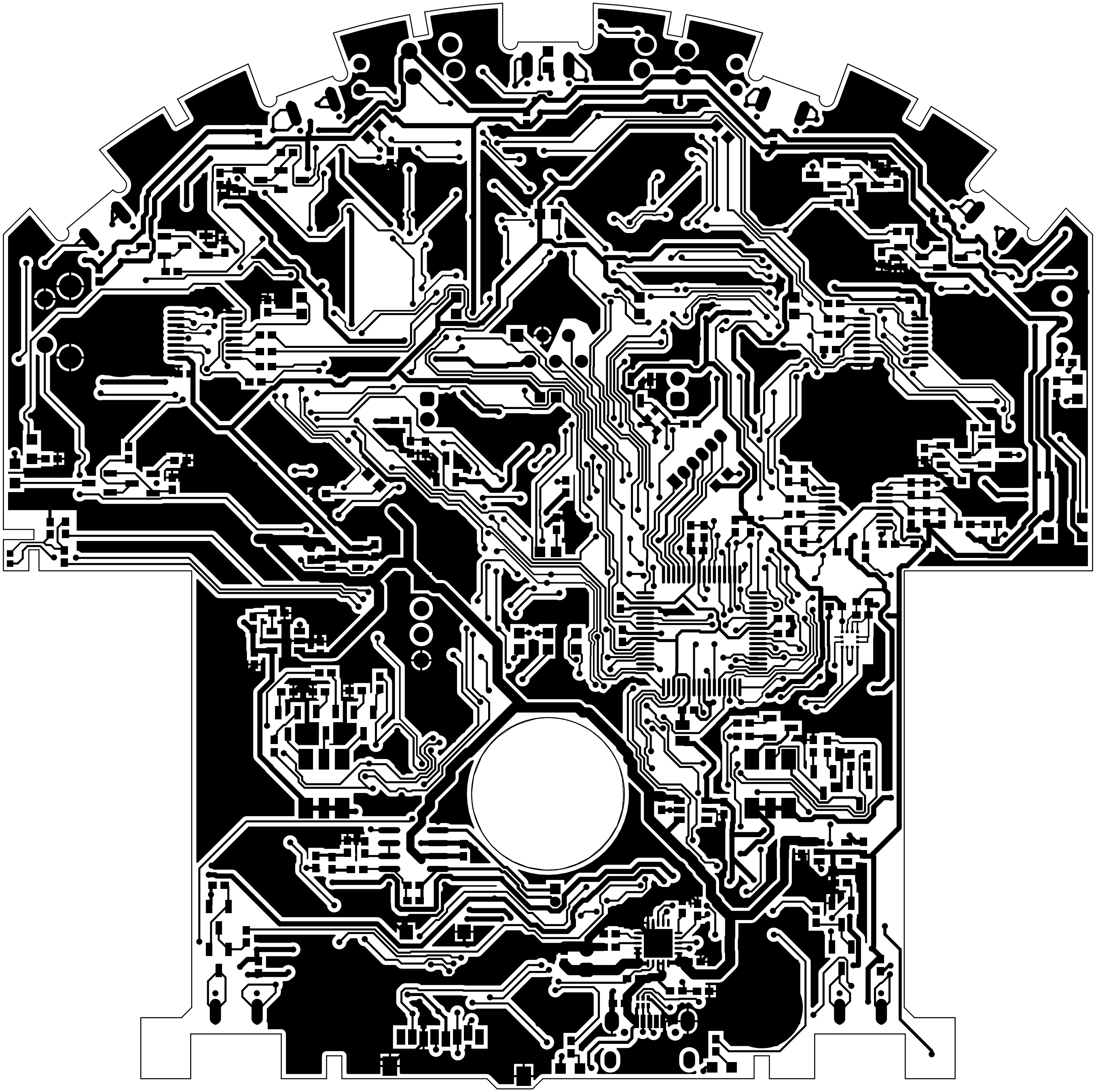

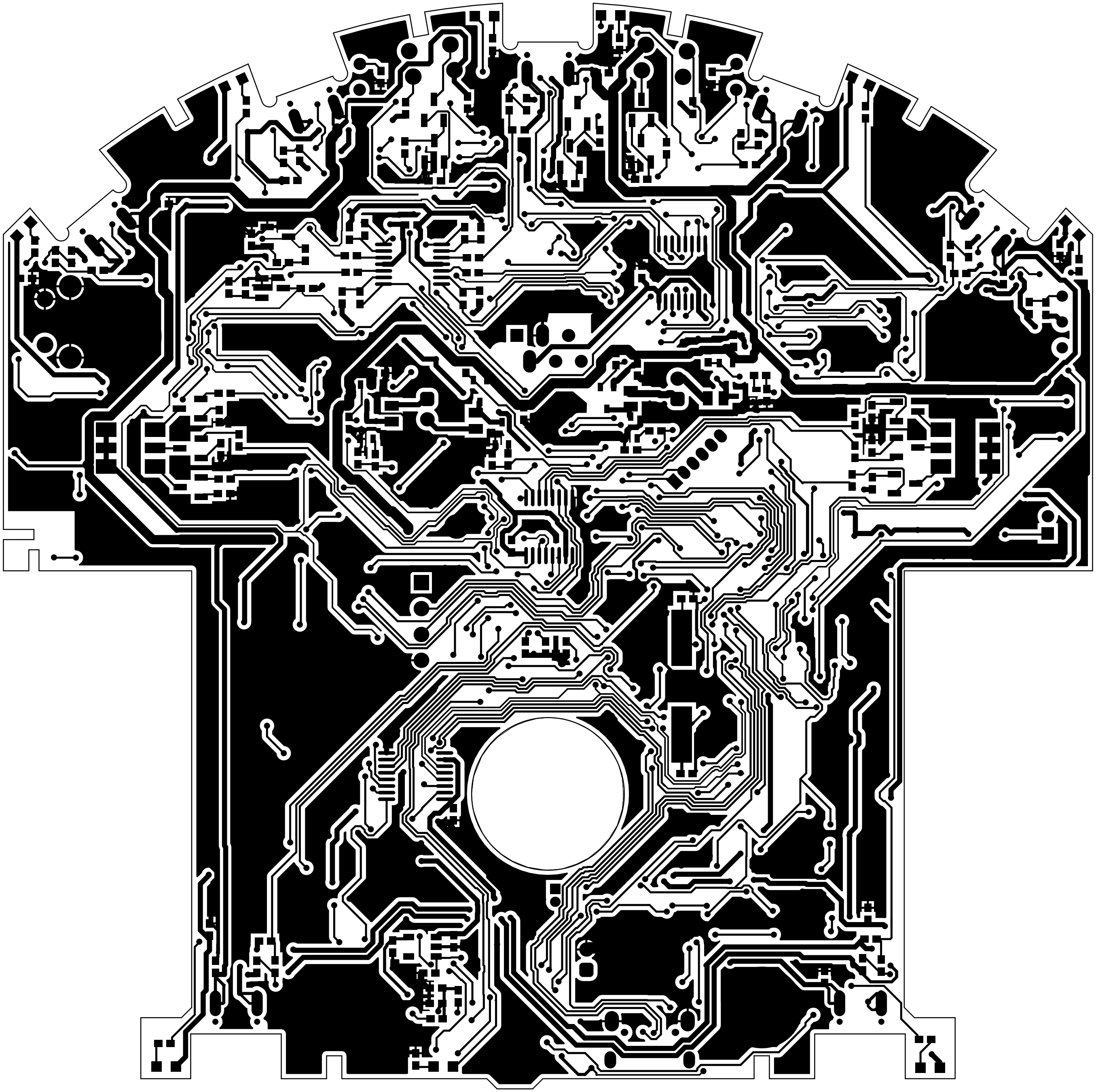

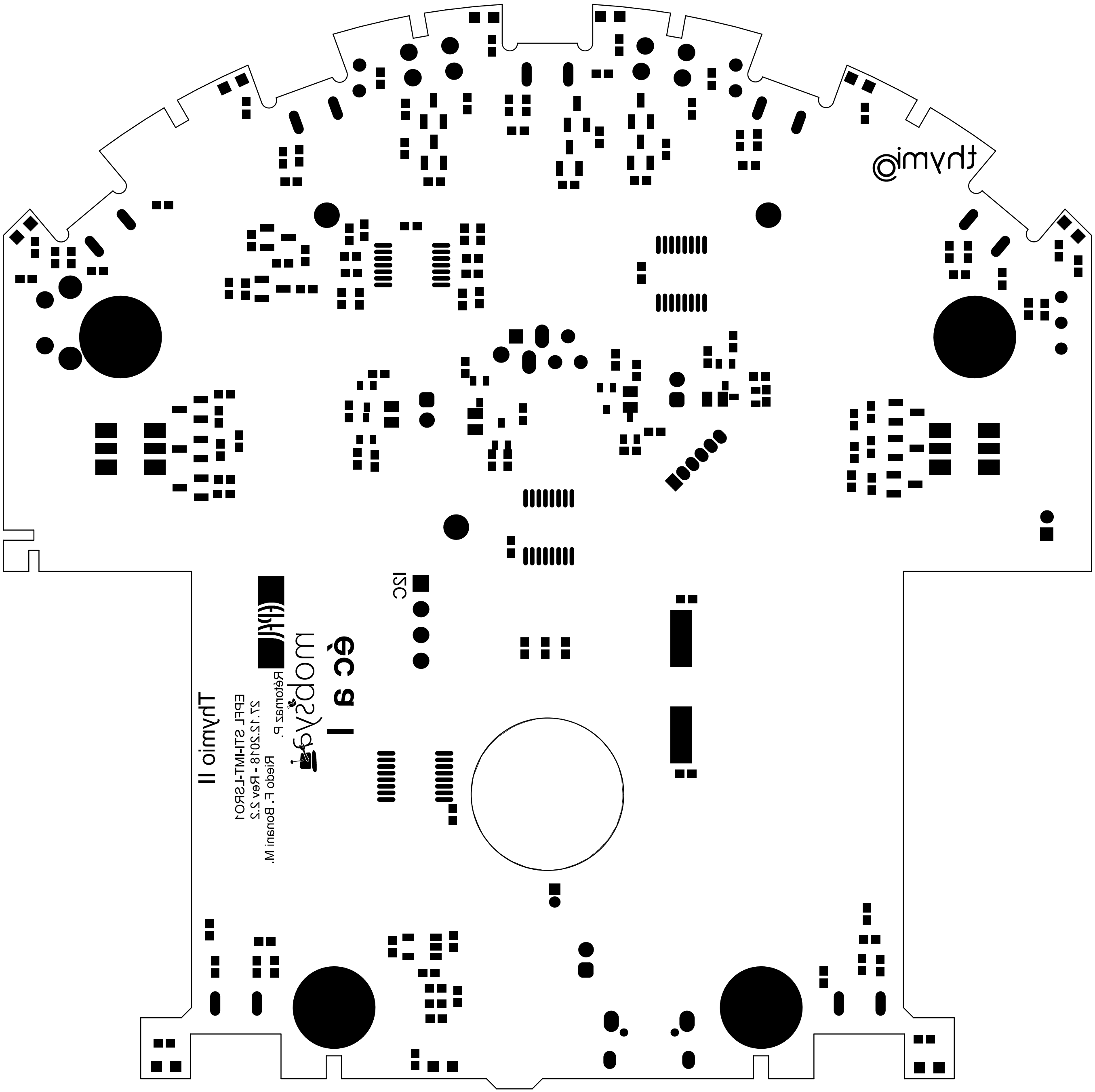
thymio
I2C
mobsya
Thymio II
Rétornaz P.
27.12.2018 - Rev 2.2
EPFL STI-IMT-LSRO1
Riedo F. Bonani M.

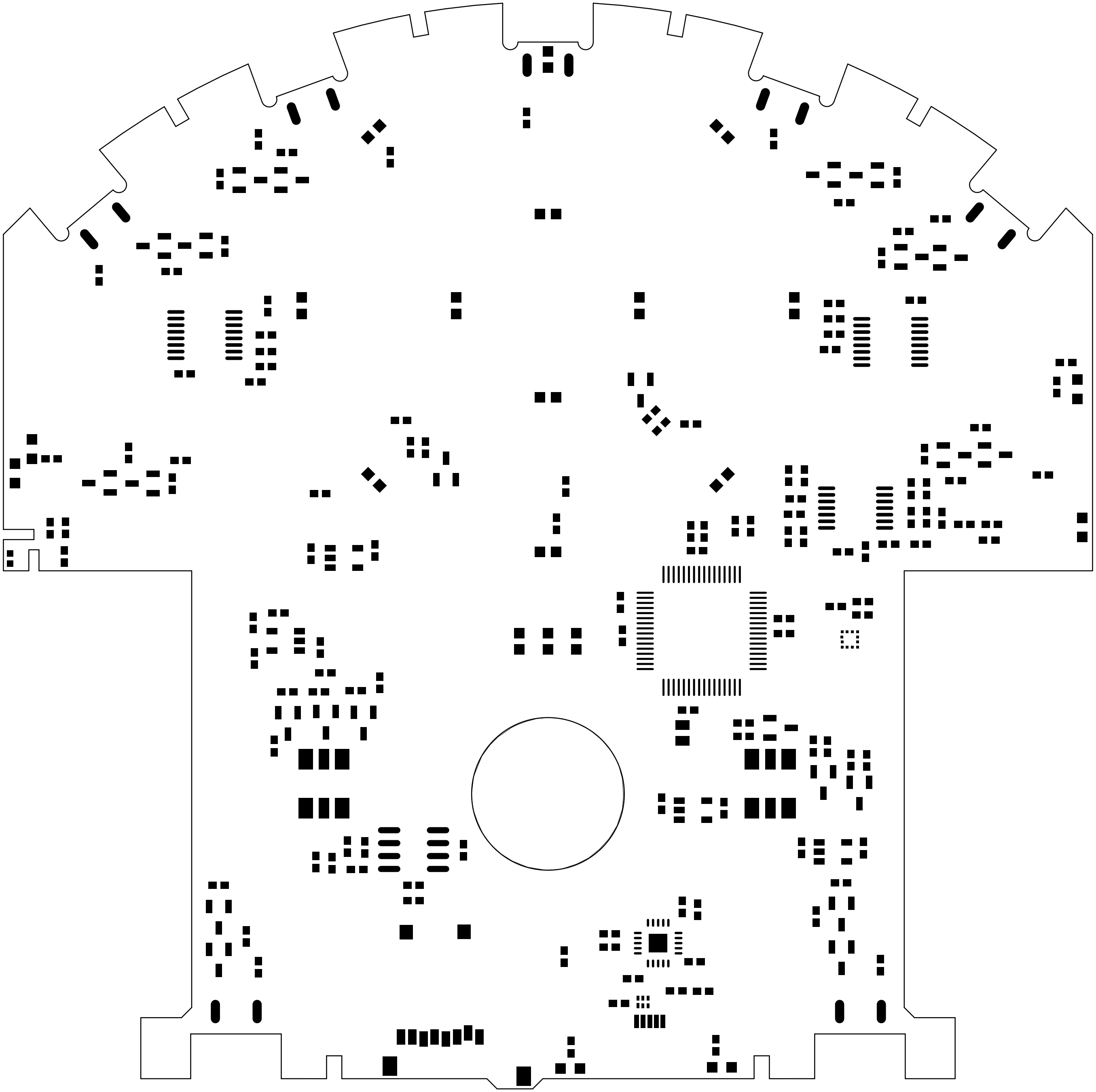

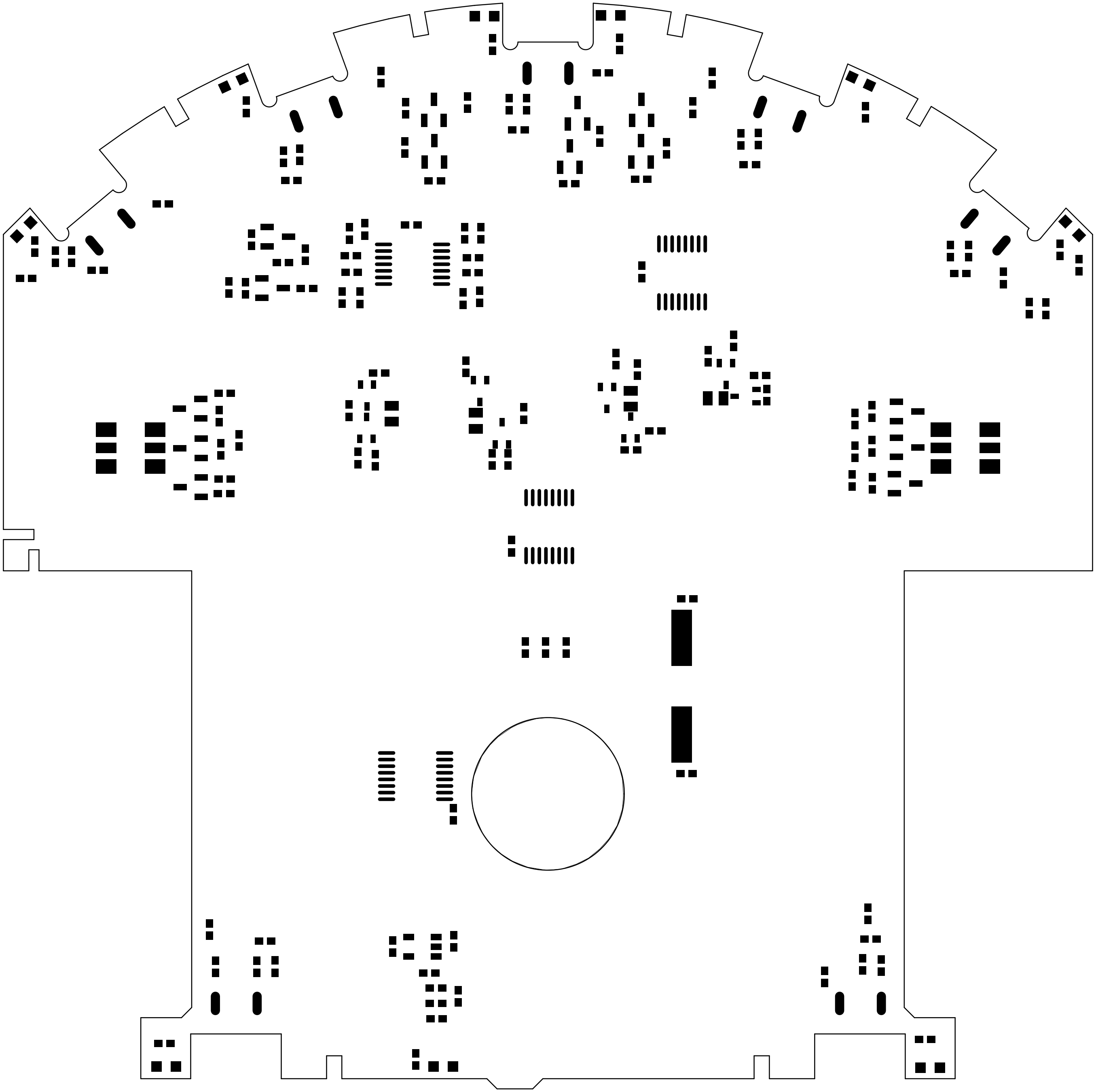

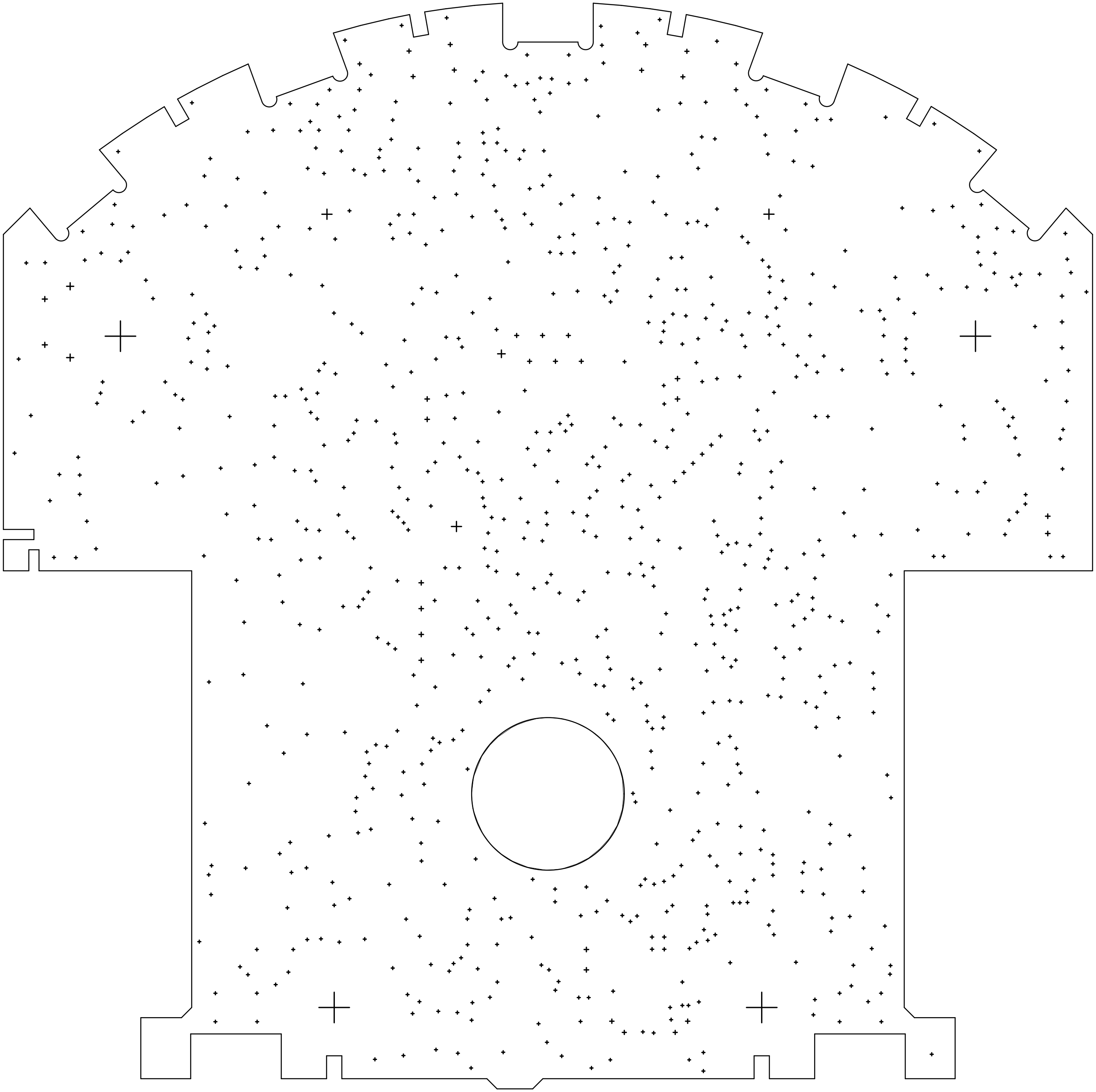

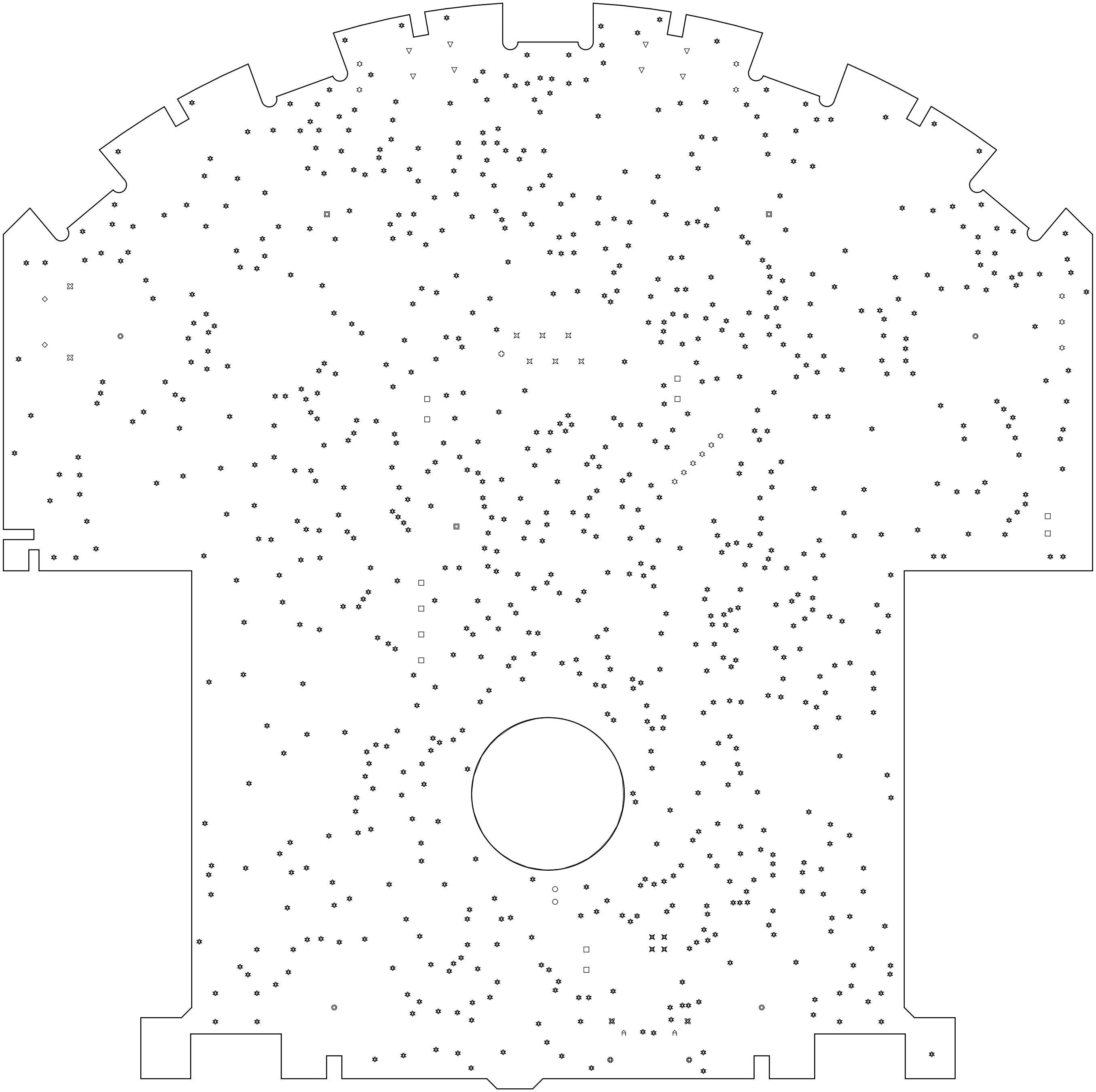

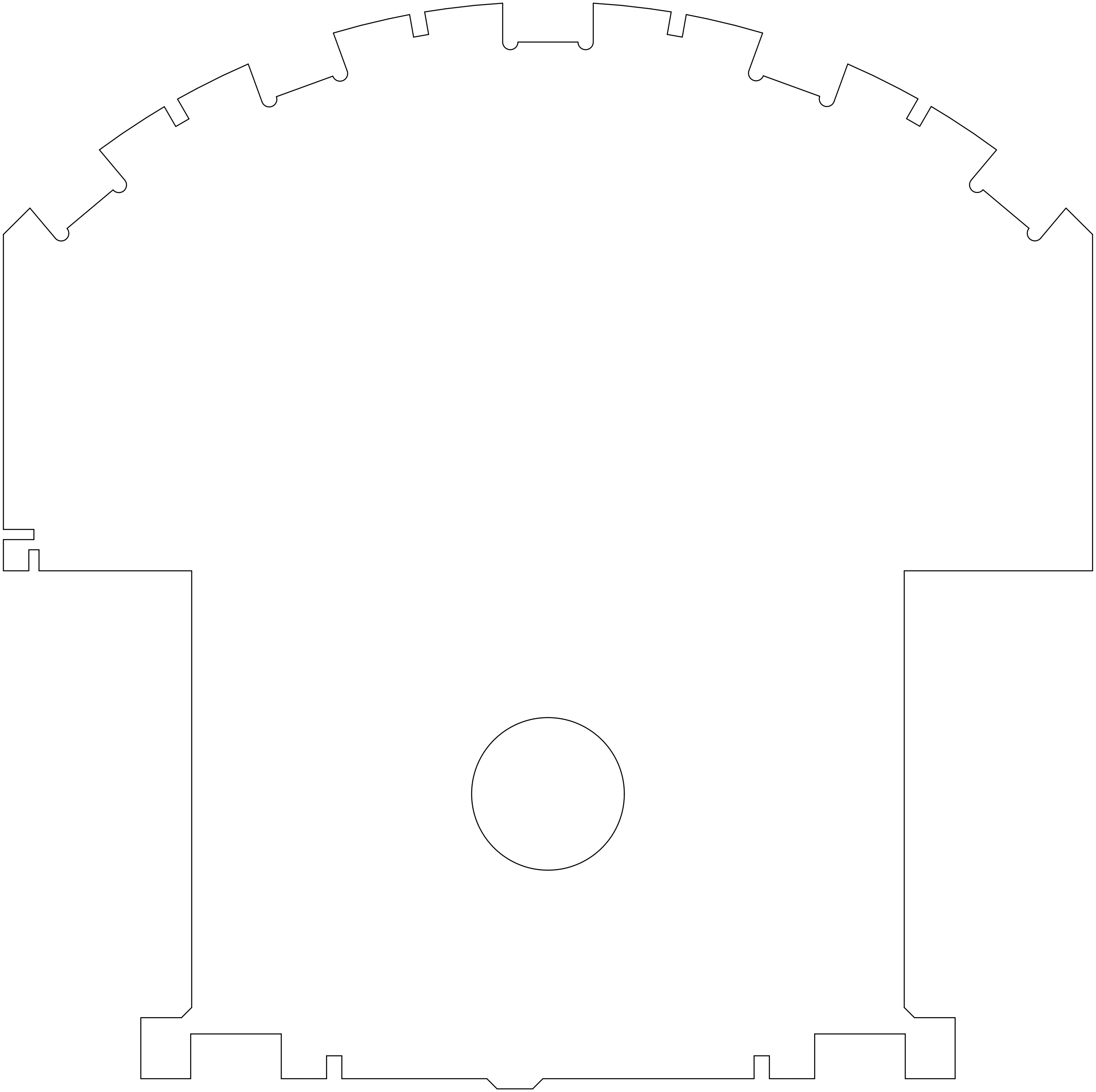

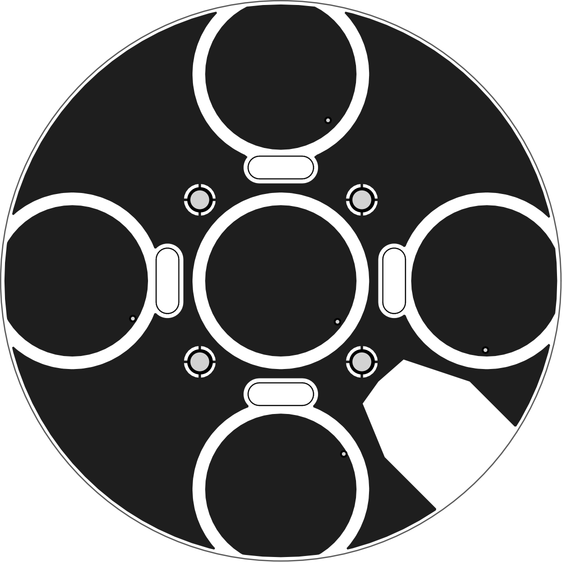

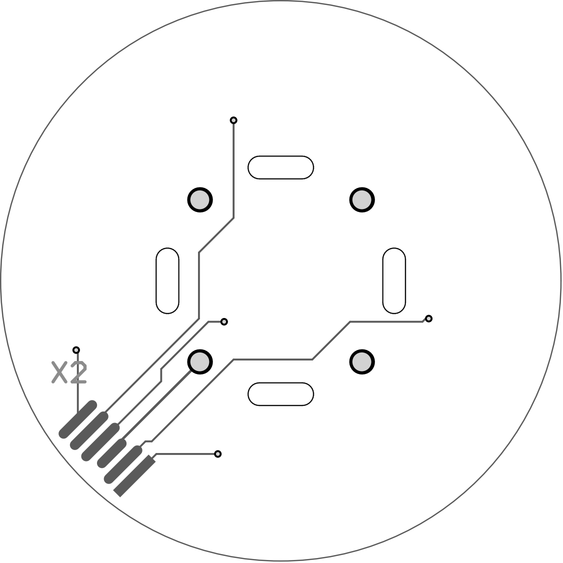
X2

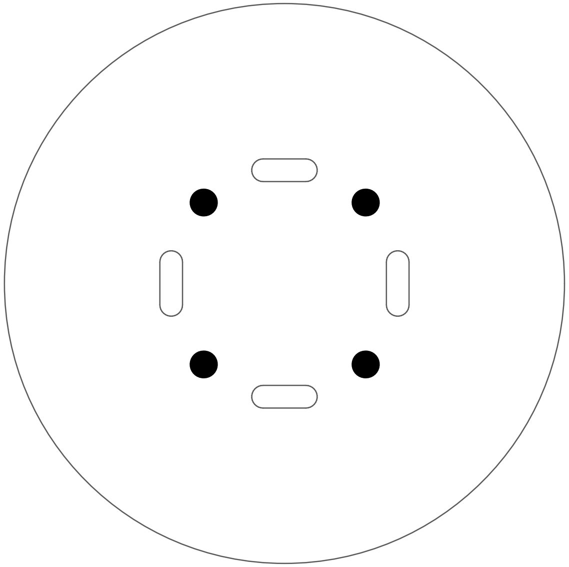

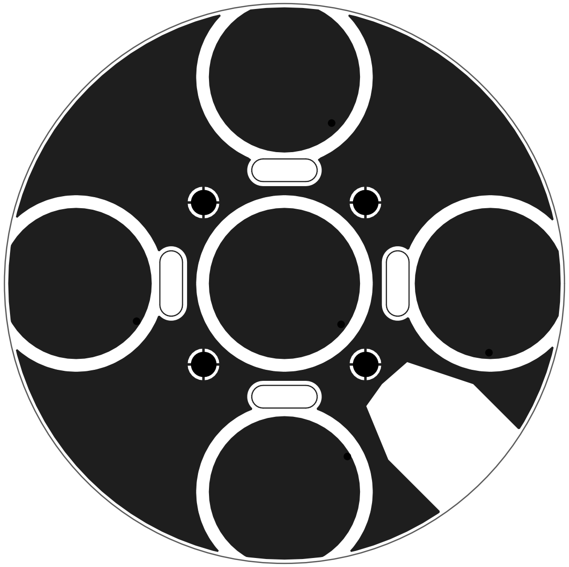

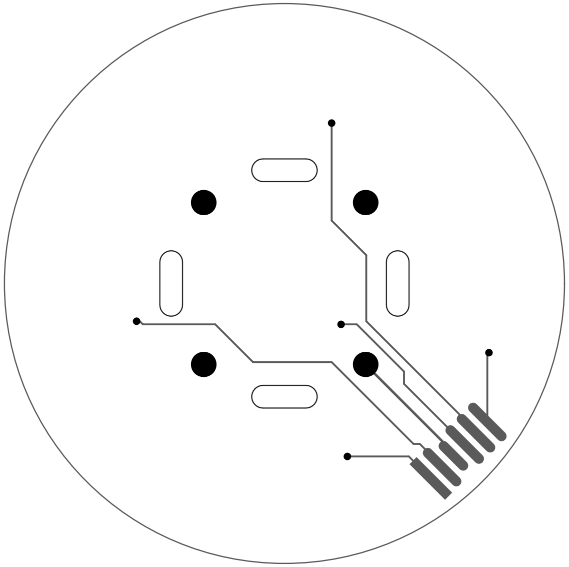

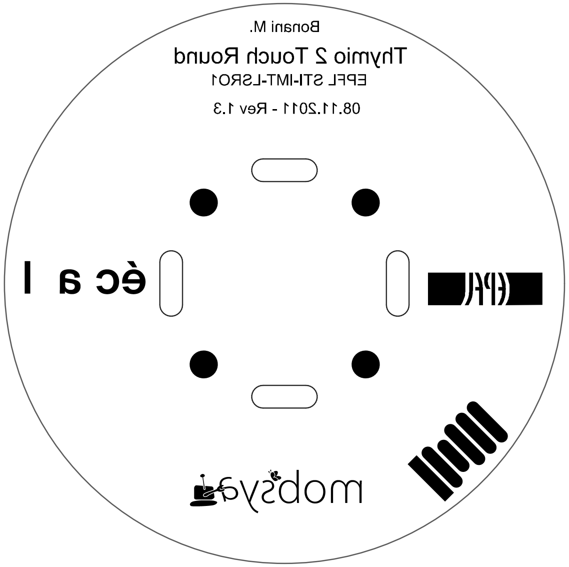
Bonani M.
Thymio 2 Touch Round
EPFL STI-IMT-LSRO1
08.11.2011 - Rev 1.3
écal
EPFL
mobsya

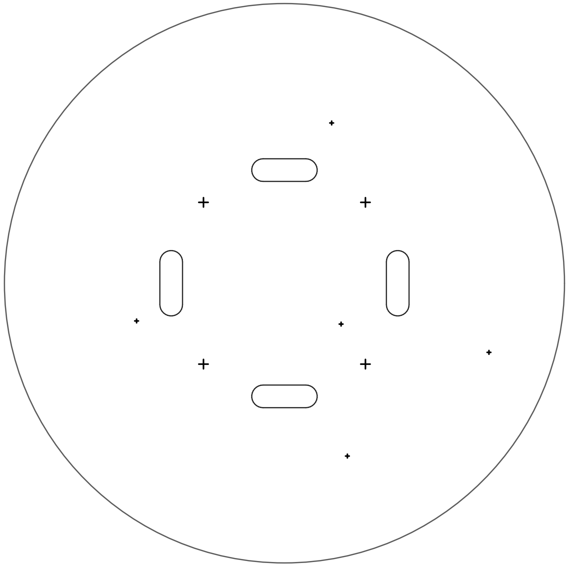

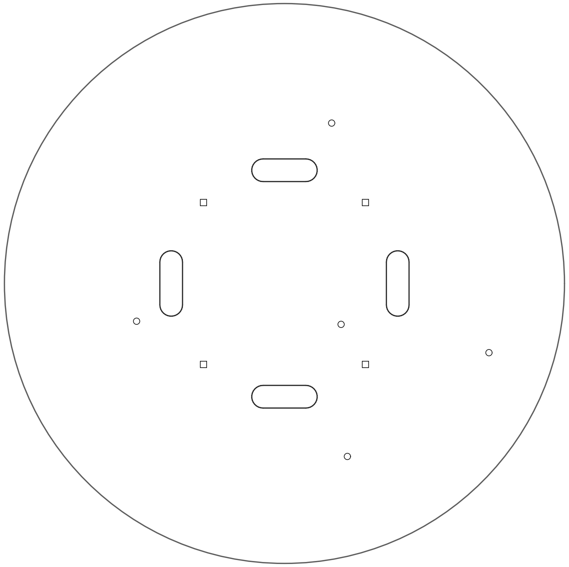

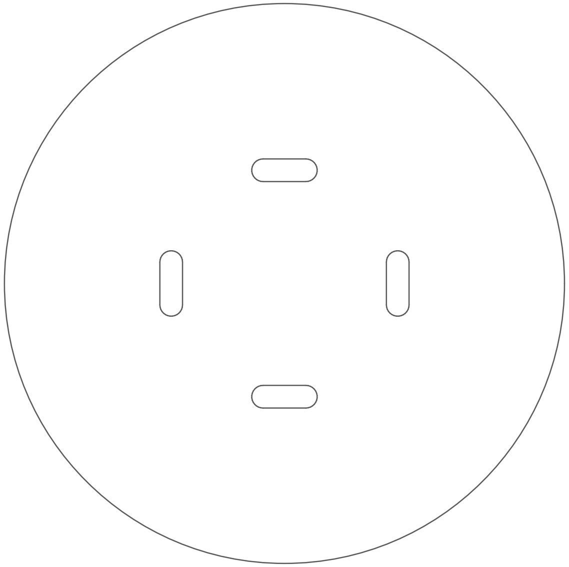

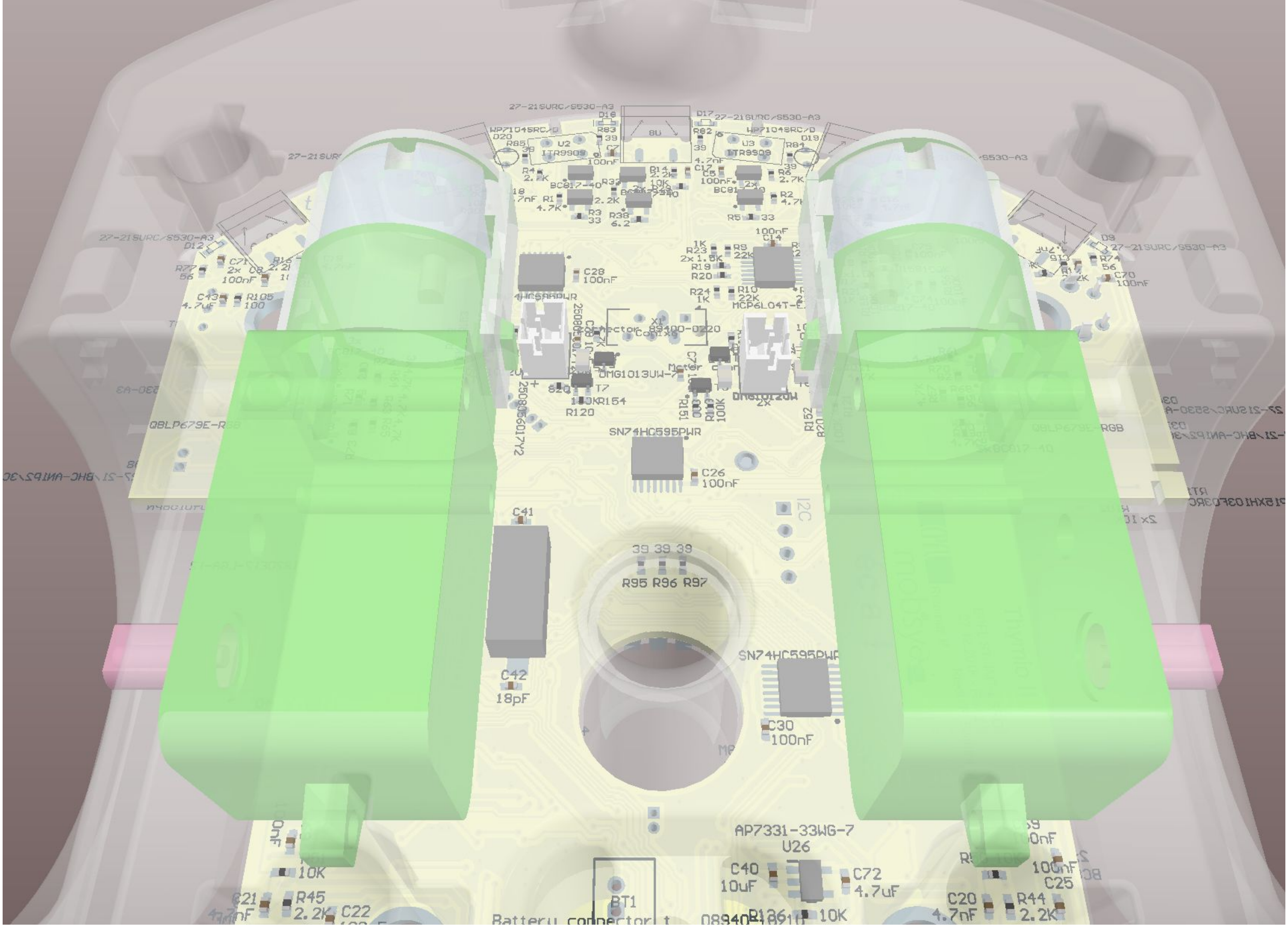
27-21SURC/S530-A3
D18
R83
39
8U
D17
27-21SURC/S530-A3
WP7104SRC/D
D20
R85
U2
ITR9909
C7
100nF
R62
39
4.7nF
U3
ITR9909
R84
D19
WP7104SRC/D
R4
2.7K
R14
2.2K
10K
C17
C5
100nF
R6
2.7K
BC817-40
R37
BC817-40
R1
4.7K
2.2K
R2
4.7K
R3
33
R38
6.2
R5
33
100nF
C14
27-21SURC/S530-A3
D12
R77
56
C71
2x
100nF
C8
R15
1K
R23
2x 1.5K
R19
R20
R9
22K
R24
1K
R10
22K
MCP6L04T-E
D9
27-21SURC/S530-A3
R74
56
C70
100nF
C43
4.7uF
R105
100
C28
100nF
74HC595PWR
X1
Connector 89400-0220
Motor
DMG1013UW-7
T7
R120
100K
R154
R151
100K
DMG1012UW
2x
R152
QBLP679E-RGB
QBLP679E-RGB
SN74HC595PWR
C26
100nF
I2C
C41
39 39 39
R95 R96 R97
SN74HC595PWR
C42
18pF
C30
100nF
AP7331-33WG-7
U26
C40
10uF
C72
4.7uF
10K
C21
R45
2.2K
C22
BT1
Battery connector
R136
10K
C20
4.7nF
R44
2.2K
C25
100nF

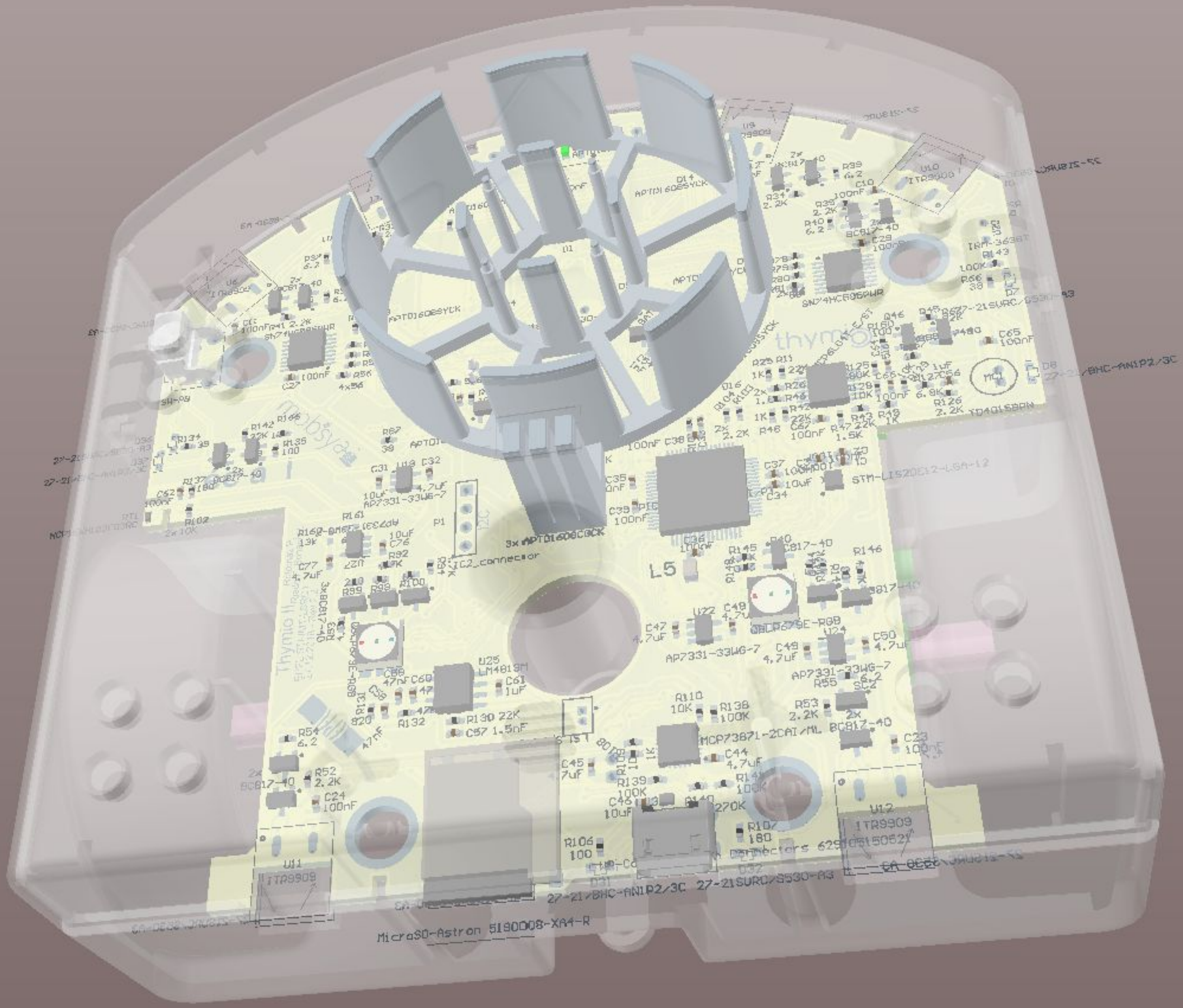

thymio
mobsya
L5
SN74HC595PWR
AP7331-33WG-7
MCP73871-2CAI/ML
LM4819M
STM-LIS2DE12-LGA-12
ITR9909
U11
U12
IRM-3638T
I2C_connector
3x APTD1608CGCK
MicroSD-Astron 5180008-XA4-R
27-21/BHC-AN1P2/3C
27-21SURC/S530-A3
BC817-40

Quantity	Comment	Designator	Description	Footprint
2	Motor connector 89400-0220	B1, B2	Motor, General Kind	BAT-2
38	100nF	C1, C3, C5, C6, C7, C8, C9, C10, C11, C12, C13, C14, C22, C23, C24, C25, C26, C27, C28, C29, C30, C33, C35, C36, C37, C38, C39, C55, C62, C65, C66, C67, C68, C69, C70, C71, C74, C75	Capacitor	CAPC1005X05N
9	10uF	C2, C31, C40, C46, C51, C52, C73, C76, C78	Capacitor	CAPC1005X05N
7	4.7nF	C15, C16, C17, C18, C19, C20, C21	Capacitor	CAPC1005X05N
10	4.7uF	C32, C43, C44, C45, C47, C48, C49, C50, C72, C77	Capacitor	CAPC1005X05N
1	10uF X5R	C34	Capacitor	CAPC1005X05N
2	18pF	C41, C42		CAPC1005X05N
2	1nF	C53, C54	Capacitor	CAPC1005X05N
3	1uF	C56, C61, C63	Capacitor	CAPC1005X05N
1	1.5nF	C57	Capacitor	CAPC1005X05N
3	47nF	C58, C59, C60	Capacitor	CAPC1005X05N
1	51pF	C64	Capacitor	CAPC1005X05N
4	19-21SURC/S530-A3/TR8	D1, D3, D4, D5	SMD Red 0603 2V@20ma 56 mcd	DIOC1608X08N
4	QBLP679E-RGB	D2, D6, D27, D38		QBLP679E-RGB
8	APTD1608SYCK	D13, D14, D15, D16, D21, D22, D23, D24	LED standard - CMS Helios SMD Yellow 590nm 480mcd	DIOC1608X08N
3	APTD1608CGCK	D28, D29, D30	LED standard - CMS Helios SMD Green 570nm 230mcd	DIOC1608X08N
2	BAT54S	D33, D34	Schottky Barrier Double Diode	SOT23_N
5	2508056017Y2	L1, L2, L3, L4, L5	SMD EMI Suppression Ferrite Bead WE-CBF, Z = 600 Ohm	INDC2012X11L
36	BC817-40	Q1, Q2, Q3, Q4, Q5, Q6, Q7, Q8, Q9, Q10, Q11, Q12, Q13, Q14, Q15, Q16, Q17, Q18, Q19, Q20, Q22, Q25, Q26, Q28, Q31, Q32, Q34, Q37, Q38, Q39, Q40, Q42, Q45, Q46, Q47, Q48	NPN General-purpose Transistor	SOT23_N
18	4.7K	R1, R2, R57, R59, R61, R63, R64, R65, R92, R93, R94, R111, R112, R113, R114, R144, R145, R146	Resistor	RESC1005X04N
2	33	R3, R5	120, Resistor	RESC1005X04N
2	2.7K	R4, R6	Resistor	RESC1005X04N
10	22K	R7, R8, R9, R10, R11, R42, R43, R67, R130, R142	120, Resistor	RESC1005X04N
17	2.2K	R12, R13, R14, R15, R16, R32, R33, R34, R35, R41, R44, R45, R52, R53, R103, R104, R126	120, Resistor	RESC1005X04N
7	1.5K	R17, R18, R19, R20, R26, R46, R47	120	RESC1005X04N
10	1K	R21, R22, R23, R24, R25, R48, R49, R108, R166, R167	120, Resistor	RESC1005X04N
16	10K	R27, R28, R29, R30, R31, R50, R51, R101, R102, R109, R110, R117, R118, R128, R129, R136	120, Resistor	RESC1005X04N
7	6.2	R36, R37, R38, R39, R40, R54, R55	120	RESC1005X04N
18	56	R56, R58, R60, R62, R68, R71, R74, R75, R76, R77, R78, R79, R80, R81, R90, R91, R98, R147	Resistor, 56	RESC1005X04N
14	39	R66, R82, R83, R84, R85, R86, R87, R88, R89, R95, R96, R97, R133, R134	Resistor	RESC1005X04N
4	200	R69, R72, R99, R148	200	RESC1005X04N
4	82	R70, R73, R100, R149	82	RESC1005X04N
4	100	R105, R106, R135, R150	Resistance, Resistor	RESC1005X04N
2	180	R107, R137	Resistor	RESC1005X04N
2	5.6K	R115, R116	Resistor	RESC1005X04N
15	100K	R119, R120, R121, R122, R123, R124, R138, R139, R141, R143, R155, R156, R157, R158, R159	Resistor	RESC1005X04N
1	680K	R125	Resistor	RESC1005X04N
1	6.8K	R127	Resistor	RESC1005X04N
5	820	R131, R151, R152, R153, R154	Resistor	RESC1005X04N
1	47K	R132	Resistor	RESC1005X04N
1	270K	R140	Resistor	RESC1005X04N
1	NCP15XH103F03RC	RT1	Thermistors - NTC 10K OHM 1% 0402	RESC1005X04L
1	MicroSD-Astron 5190008-XA4-R	S1	MicroSD Card connector 5190008-XA4-R	Astron 5190008-XA4-R
1	SW-PB	S2	Switch	FSMRA2JH
4	DMG1013UW-7	T1, T2, T3, T4	Transistor MOSFET 1 x P Pining : 1=G, 2=S, 3=D	SOT65P210X100-3N
4	DMG1012UW	T5, T6, T7, T8	Transistor MOSFET 1 x N, Pining : 1=G, 2=S, 3=D	SOT65P210X100-3N
1	STM-LIS2DE12-LGA-12	U1		STM-LGA-12
2	MCP6L04T-E/ST	U4, U5	1 MHz, 85 µA Quad Op Amp, 14-Pin TSSOP, Extended Temperature Range, Tape and Reel	TSSOP-ST14_N
5	SN74HC595PWR	U13, U14, U15, U16, U17	8-Bit Serial-Input/Serial or Prallel-Output Shift Register with Latched 3-State Outputs	948F-01_N
5	AP7331-33WG-7	U18, U22, U24, U26, U27	300mA, Low Quiescent Current, Fast Transient LDO	SOT95P285X100-5N
1	PIC24FJ128GB106-I/PT	U19	General Purpose 16-Bit Flash Microcontroller with USB On-The-Go, 128KB Flash, 16KB SRAM, 64-Pin TQFP, Industrial Temperature	TQFP-PT64_N
1	MCP73871-2CAI/ML	U21	Stand-Alone System Load Sharing and Li-Ion/Li-Polymer Battery Charge Management Controller, 4.2V, 20-Pin QFN, Industrial Temperature	QFN-ML20_N
1	FAN3988	U23	USB/Charger and Over Voltage Detection Device	MLP 1.45X1MM
1	LM4819M	U25	350mW Audio Power Amplifier with Shutdown Mode	M08A_N
1	WR-Communication Connectors 629105150521	X3	WR-COM_USB_Micro Type B_Horizontal_SMT	629105150521
1	815-ABLS-8-B2	Y1	Surface Mount Quartz Crystal 8Mhz	HC49/4H_SMX