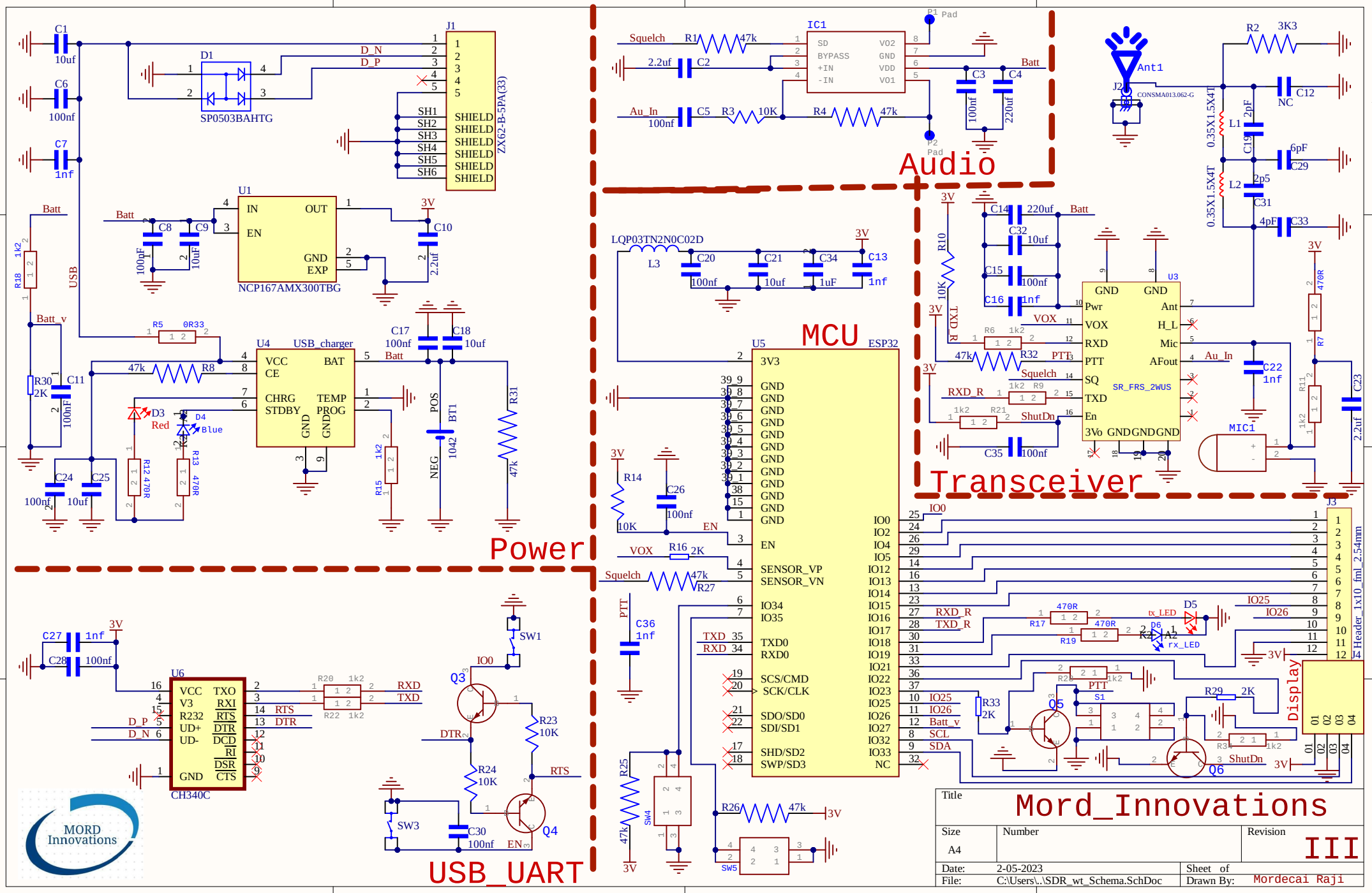
Power
Audio
MCU
Transceiver
USB_UART
Display
J1
ZX62-B-5PA(33)
SP0503BAHTG
D1
U1
NCP167AMX300TBG
U4
USB_charger
U5
ESP32
IC1
U3
SR_FRS_2WUS
U6
CH340C
J3
Header_1x10_fml_2.54mm
J4
Ant1
CONSMA013.062-G
MIC1
LQP03TN2N0C02D
L3
Batt
Batt_v
USB
3V
D3
Red
D4
Blue
Squelch
Au_In
VOX
PTT
EN
RXD
TXD
RTS
DTR
SW1
SW3
SW4
SW5
Q3
Q4
Q5
Q6
D5
D6
tx_LED
rx_LED
Mord_Innovations
Title
Size
A4
Number
Revision
III
Date:
2-05-2023
Sheet of
File:
C:\Users\..\SDR_wt_Schema.SchDoc
Drawn By:
Mordecai Raji
MORD Innovations