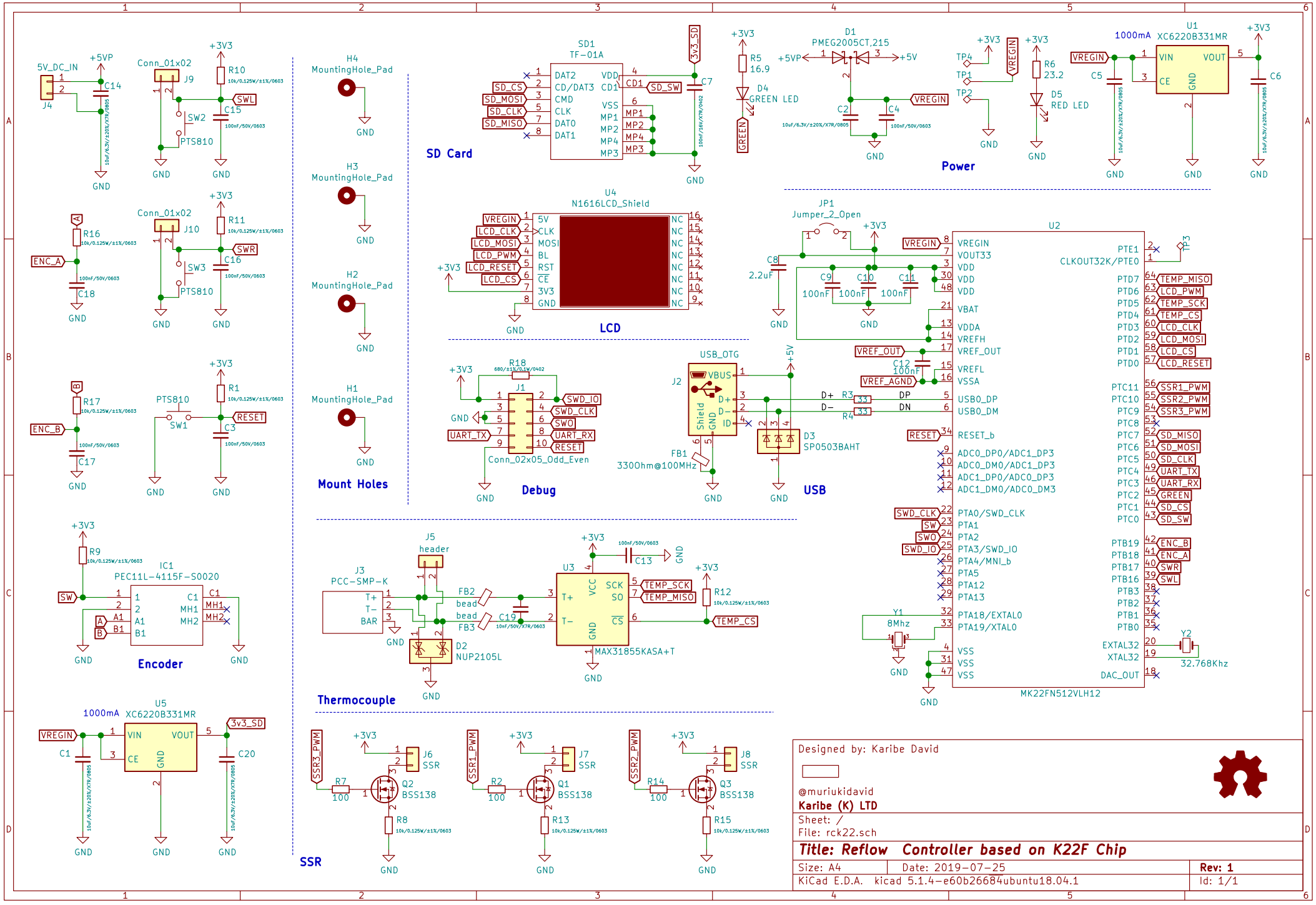
SD Card
SD1
TF-01A
Power
D1
PMEG2005CT,215
U1
XC6220B331MR
1000mA
LCD
U4
N1616LCD_Shield
Debug
Conn_02x05_Odd_Even
USB
USB_OTG
D3
SP0503BAHT
Encoder
IC1
PEC11L-4115F-S0020
Thermocouple
J5
header
J3
PCC-SMP-K
D2
NUP2105L
MAX31855KASA+T
U5
XC6220B331MR
SSR
Q2
BSS138
Q1
BSS138
Q3
BSS138
Mount Holes
H4
MountingHole_Pad
H3
MountingHole_Pad
H2
MountingHole_Pad
H1
MountingHole_Pad
U2
MK22FN512VLH12
Y1
8Mhz
Y2
32.768Khz
Designed by: Karibe David
@muriukidavid
Karibe (K) LTD
Sheet: /
File: rck22.sch
Title: Reflow Controller based on K22F Chip
Size: A4
Date: 2019-07-25
Rev: 1
KiCad E.D.A. kicad 5.1.4-e60b26684ubuntu18.04.1
Id: 1/1