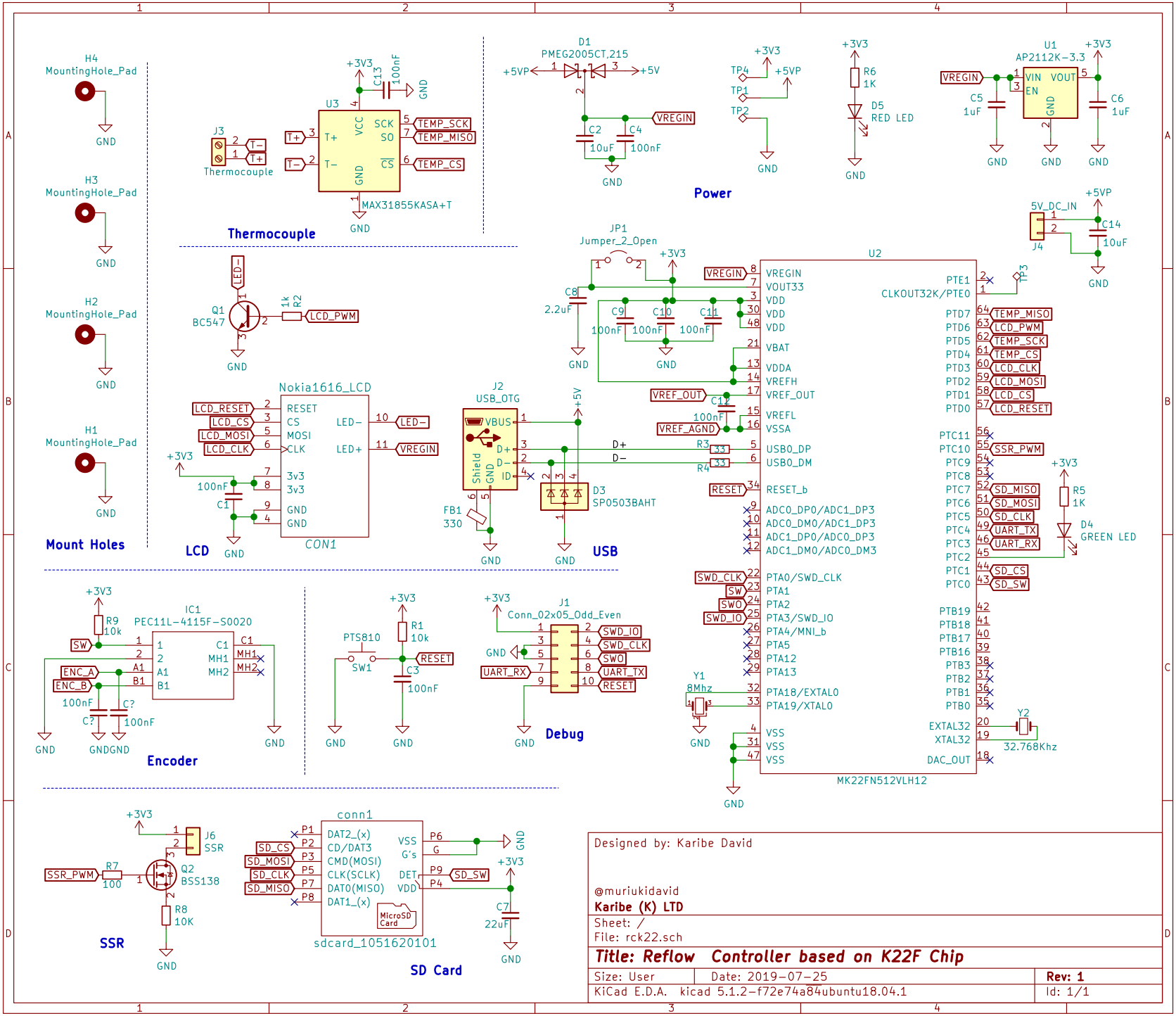
Mount Holes
H4 MountingHole_Pad
H3 MountingHole_Pad
H2 MountingHole_Pad
H1 MountingHole_Pad
GND
Thermocouple
J3
T+
T−
U3
MAX31855KASA+T
+3V3
C13 100nF
TEMP_SCK
TEMP_MISO
TEMP_CS
SCK
SO
CS
VCC
GND
Power
D1 PMEG2005CT,215
+5VP
+5V
VREGIN
C2 10uF
C4 100nF
TP4
TP1
TP2
R6 1K
D5 RED LED
U1 AP2112K-3.3
VIN
VOUT
EN
C5 1uF
C6 1uF
5V_DC_IN
J4
C14 10uF
LCD
Q1 BC547
LED−
R2 1k
LCD_PWM
Nokia1616_LCD
RESET
CS
MOSI
CLK
LED−
LED+
3v3
LCD_RESET
LCD_CS
LCD_MOSI
LCD_CLK
C1 100nF
CON1
USB
J2 USB_OTG
VBUS
D+
D−
ID
Shield
FB1 330
D3 SP0503BAHT
JP1 Jumper_2_Open
C8 2.2uF
C9 100nF
C10 100nF
C11 100nF
C12 100nF
VREF_OUT
VREF_AGND
R3 33
R4 33
U2
MK22FN512VLH12
VREGIN
VOUT33
VDD
VBAT
VDDA
VREFH
VREFL
VSSA
USB0_DP
USB0_DM
RESET_b
ADC0_DP0/ADC1_DP3
ADC0_DM0/ADC1_DP3
ADC1_DP0/ADC0_DP3
ADC1_DM0/ADC0_DM3
PTA0/SWD_CLK
PTA1
PTA2
PTA3/SWD_IO
PTA4/MNI_b
PTA5
PTA12
PTA13
PTA18/EXTAL0
PTA19/XTAL0
VSS
PTE1
CLKOUT32K/PTE0
PTD7
PTD6
PTD5
PTD4
PTD3
PTD2
PTD1
PTD0
PTC11
PTC10
PTC9
PTC8
PTC7
PTC6
PTC5
PTC4
PTC3
PTC2
PTC1
PTC0
PTB19
PTB18
PTB17
PTB16
PTB3
PTB2
PTB1
PTB0
EXTAL32
XTAL32
DAC_OUT
SSR_PWM
SD_MISO
SD_MOSI
SD_CLK
UART_TX
UART_RX
SD_CS
SD_SW
SWD_CLK
SW
SWO
SWD_IO
RESET
TP3
R5 1K
D4 GREEN LED
Y1 8Mhz
Y2 32.768Khz
Encoder
IC1 PEC11L-4115F-S0020
R9 10k
SW
ENC_A
ENC_B
A1
B1
C1
MH1
MH2
C? 100nF
Debug
PTS810
SW1
R1 10k
C3 100nF
J1 Conn_02x05_Odd_Even
SSR
J6 SSR
R7 100
Q2 BSS138
R8 10K
SD Card
conn1
sdcard_1051620101
DAT2_(x)
CD/DAT3
CMD(MOSI)
CLK(SCLK)
DAT0(MISO)
DAT1_(x)
VSS
G's
DET
VDD
MicroSD Card
P1
P2
P3
P5
P7
P8
P6
G
P9
P4
SD_SW
C7 22uF
Designed by: Karibe David
@muriukidavid
Karibe (K) LTD
Sheet: /
File: rck22.sch
Title: Reflow Controller based on K22F Chip
Size: User
Date: 2019-07-25
Rev: 1
KiCad E.D.A. kicad 5.1.2-f72e74a84ubuntu18.04.1
Id: 1/1