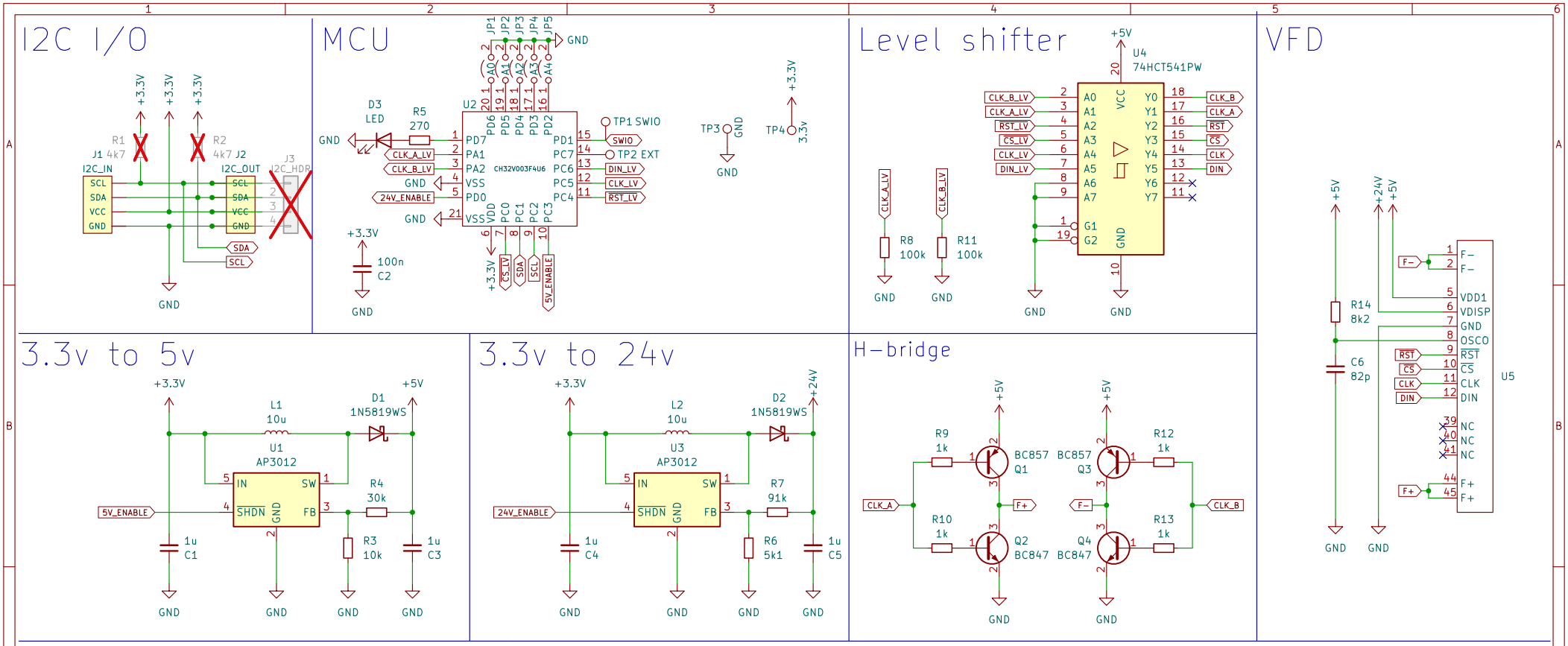

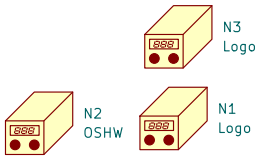

Nicolai Electronics

Sheet: /

File: vfd.kicad_sch

Title: HCS-12SS59T VFD

Size: A4	Date: 2024-02-26	**Rev: 1.0**
KiCad E.D.A. 8.0.0-rc3		Id: 1/1