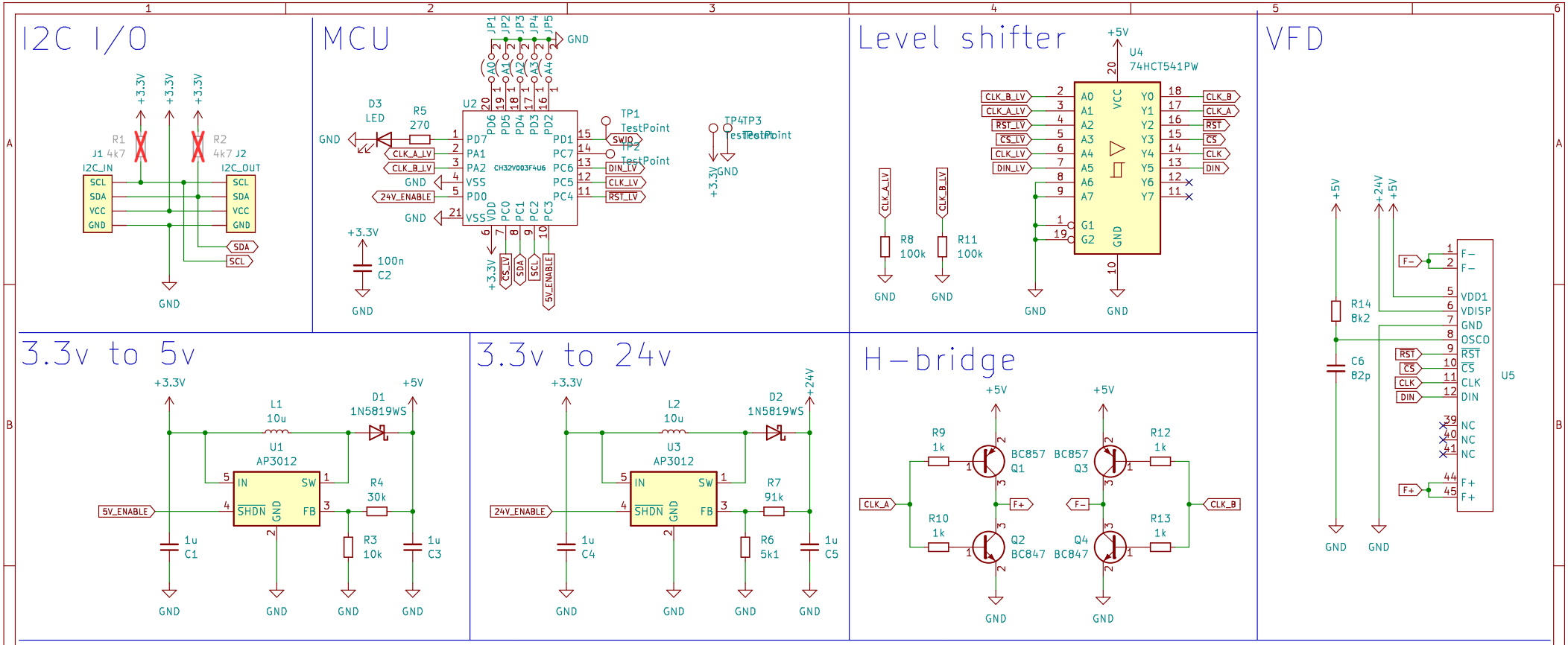

Nicolai Electronics

Sheet: /

File: vfd.kicad_sch

Title: HCS-12SS59T VFD

Size: A4	Date: 2023-09-09	**Rev: 0.2**
KiCad E.D.A. kicad 7.99.0-1746-ga80ac8286d-dirty		Id: 1/1