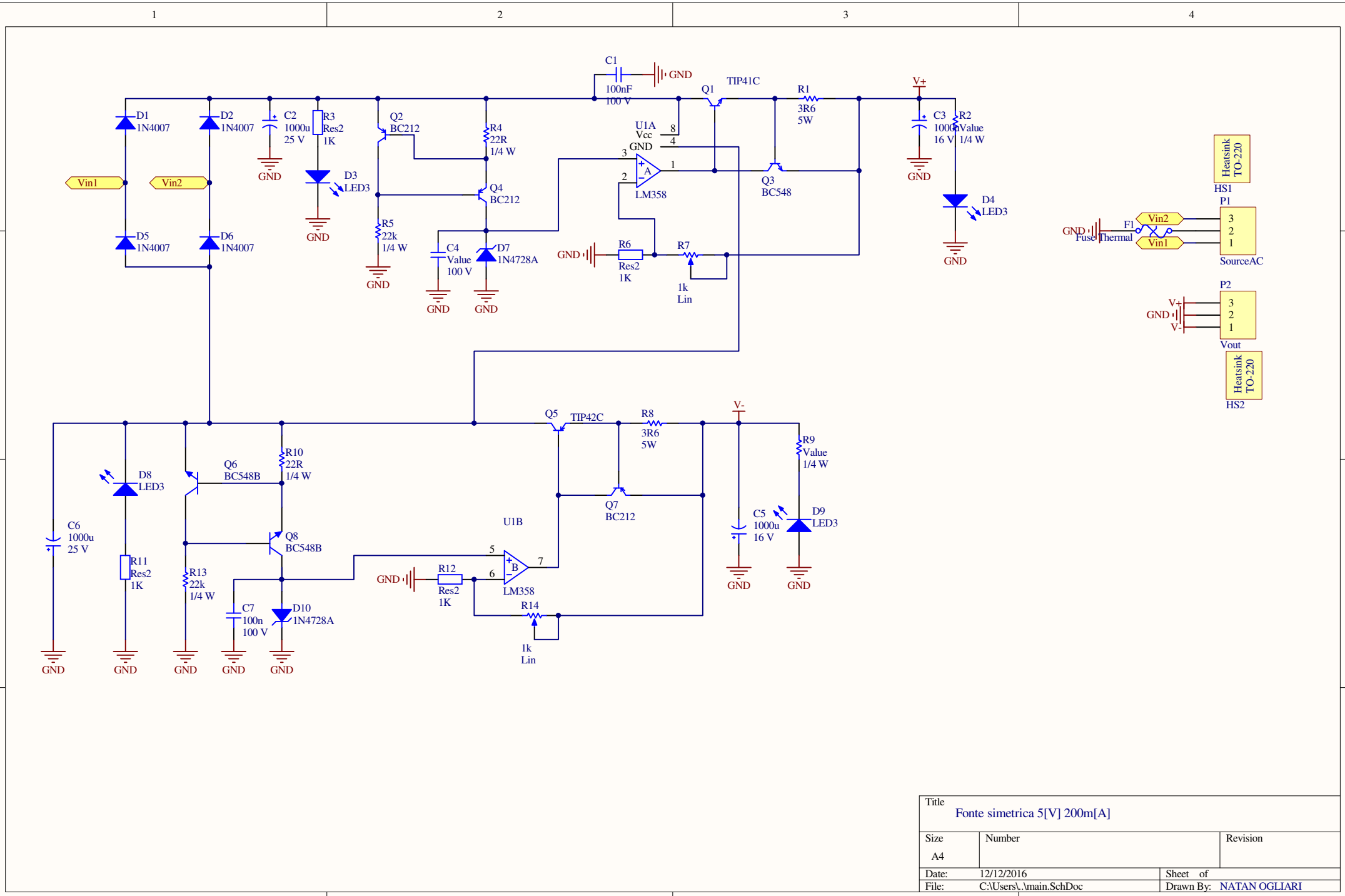

Title	Fonte simetrica 5[V] 200m[A]	
Size A4	Number	Revision
Date: 12/12/2016		Sheet of
File: C:\Users\..\main.SchDoc		Drawn By: NATAN OGLIARI