Amiga 1200 version of SmallyMouse2 adapter:

https://www.waitingforfriday.com/?p=827

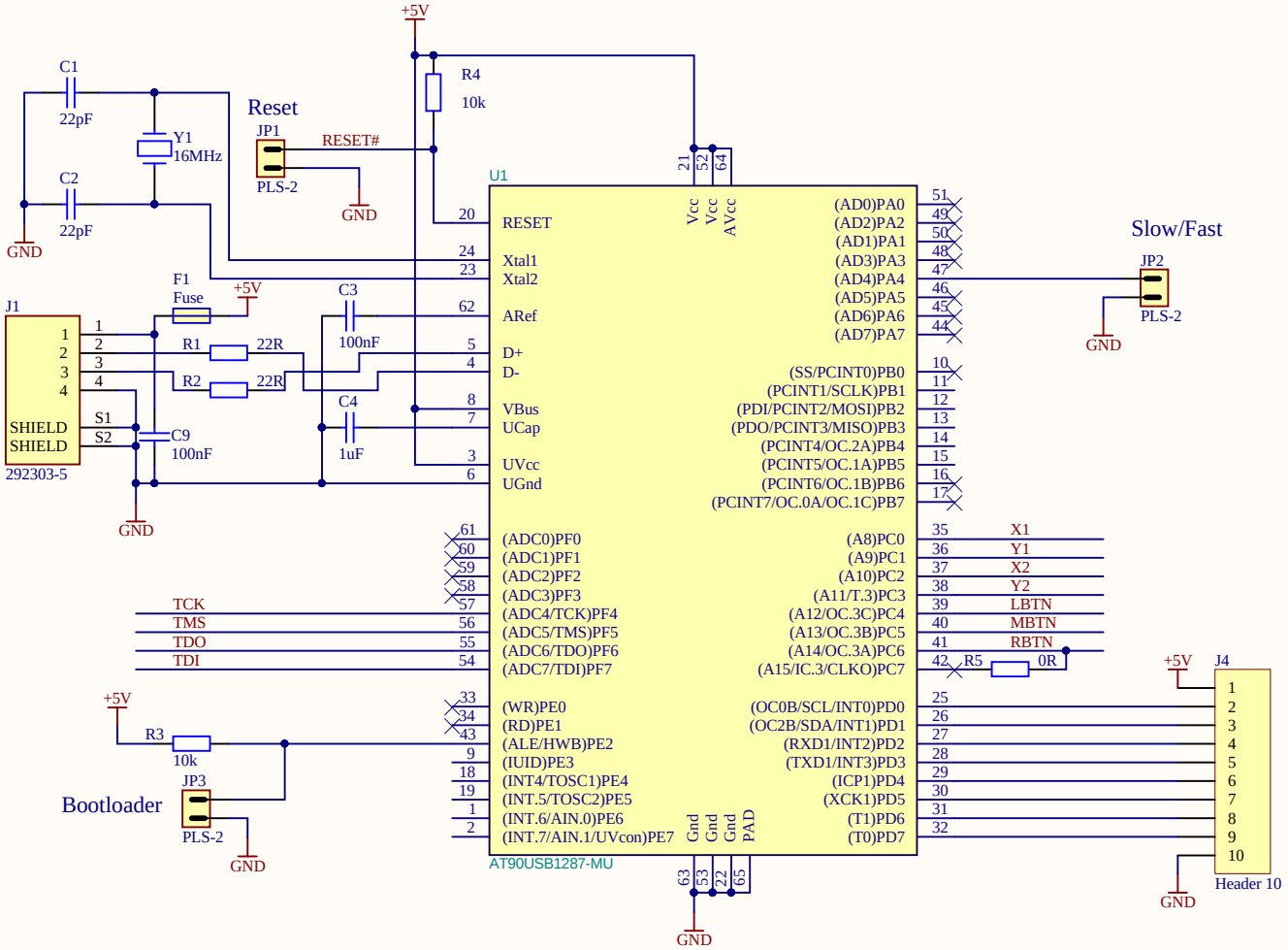

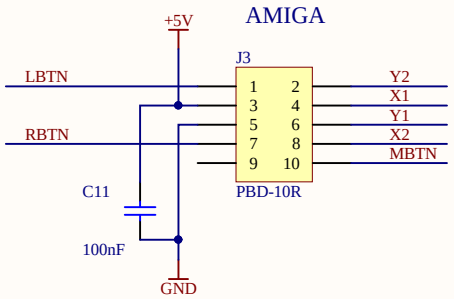

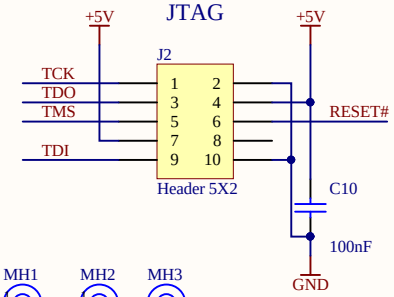

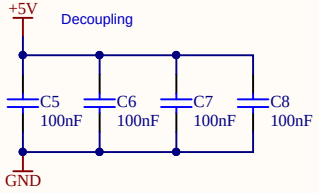

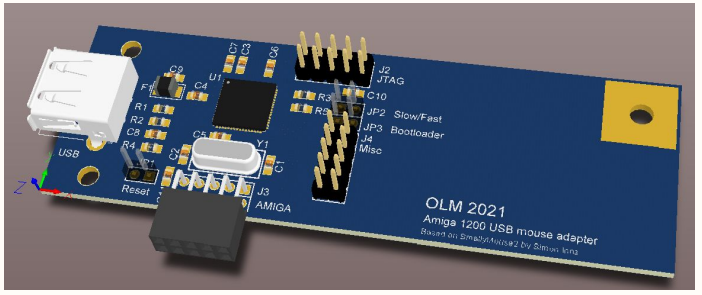

Title	***SmallyMouse2***		*OLM*
Size: A4	Number: *	Revision: 0.0	*
Date: 24.05.2022	Time: 20:31:28	Sheet 1 of 1	*
File: SmallyMouse2.schdoc			*

OLM