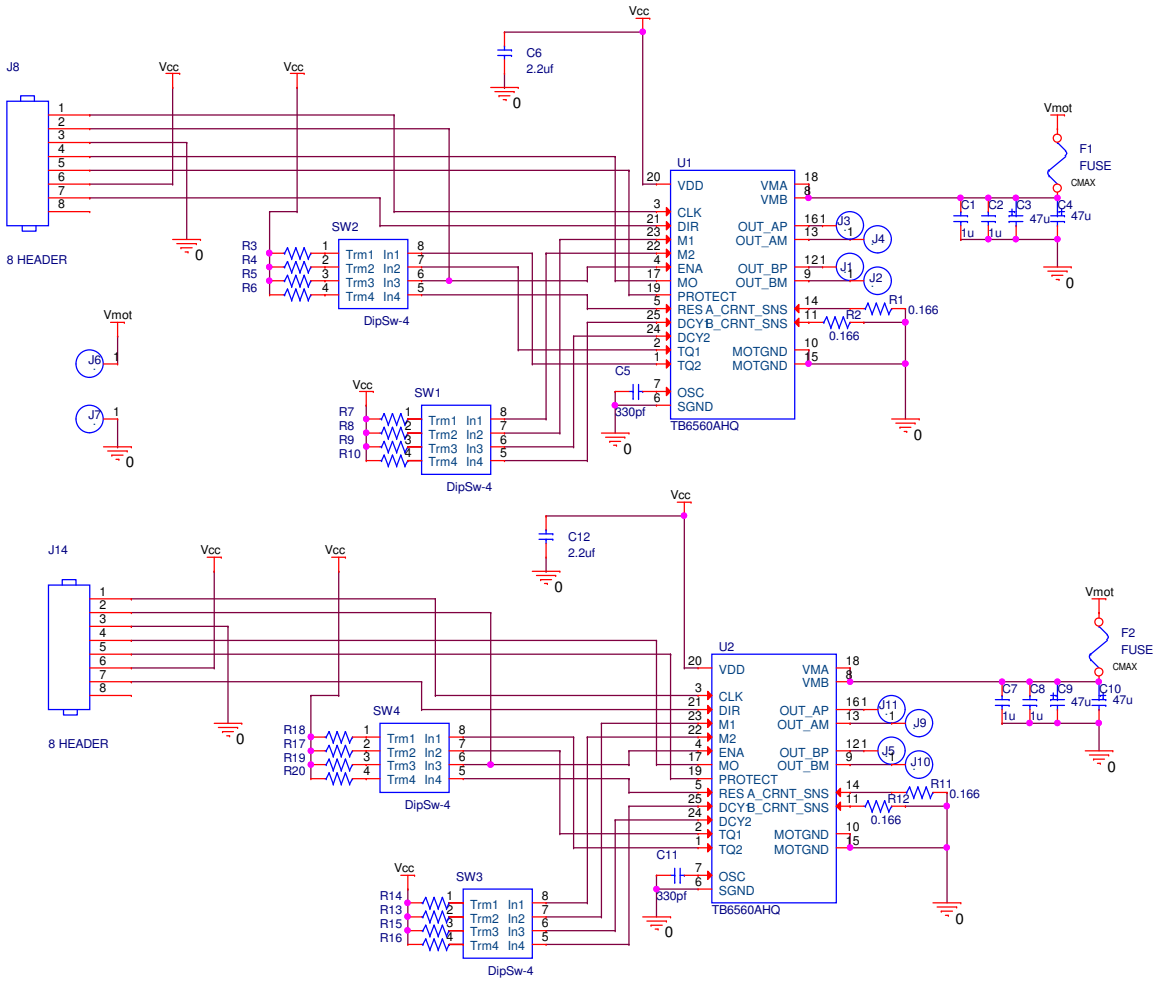

Title	StepperNug OSE V1	
Size B	Document Number CC-SA opencapitalist.org by Darren Vandervort	Rev 1
Date: Tuesday, June 12, 2012	Sheet 1 of 1	