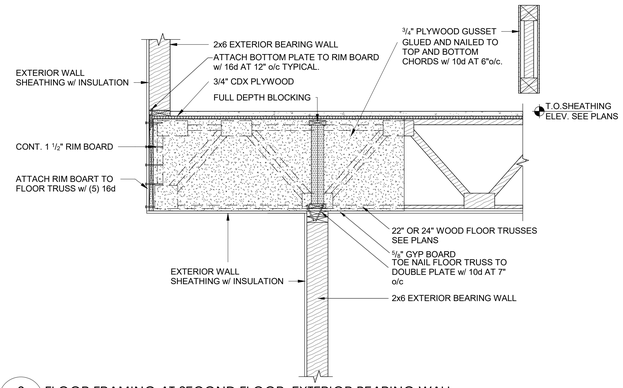

6 S214 FLOOR FRAMING AT SECOND FLOOR. EXTERIOR BEARING WALL

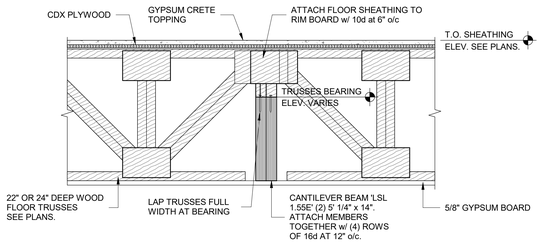

7 S214 CANTILEVER. SECTION

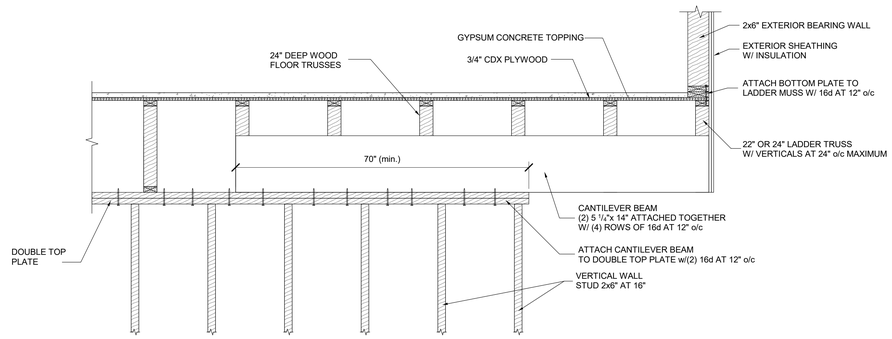

8 S214 CANTILEVER. LATERAL VIEW

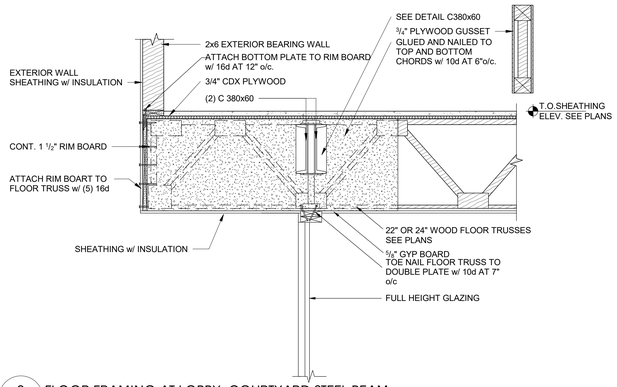

9 S214 FLOOR FRAMING AT LOBBY. COURTYARD STEEL BEAM

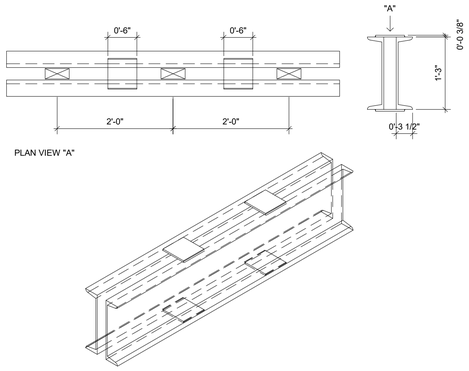

C380x60 DETAIL

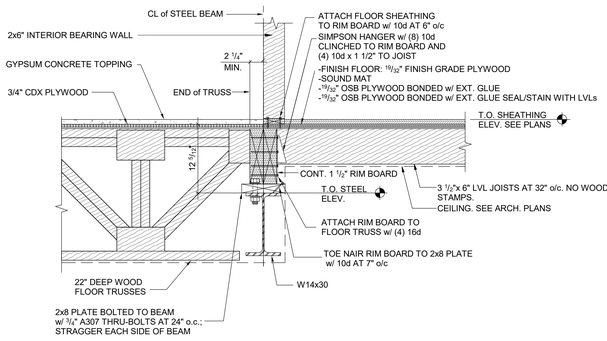

10 S214 FLOOR FRAMING AT LOBBY. CORRIDOR STEEL BEAM

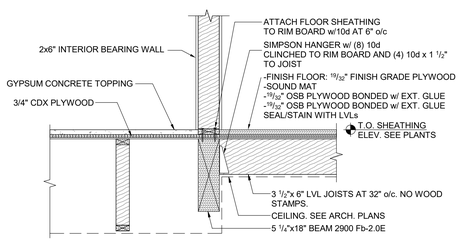

11 S214 FLOOR FRAMING AT LOBBY. INTERIOR BEARING WALL

CAPITAL GROUP
Developer: W Capital Group
tyler@wcapitalgroupre.com | 608.345.9848

Architect: OpeningDesign
316 W Washington Ave | Suite 675
Madison, WI 53703
ryan@openingdesign.com | 773.425.6456

ROYAL CONSTRUCTION
General Contractor: ROYAL CONSTRUCTION
3653 Greenway Street | Eau Claire, WI 54701
jim@royalbuilt.com | 715-225-6377

Cedar corporation
Civil Engineer: CEDAR CORPORATION
604 Wilson Avenue | Menomonie, WI 54751
kevin.oium@cedarcorp.com | 715-235-9081

Structural Engineer: Structural Engineering
Calle Apolonio Morales, 628036 Madrid,
l.pereztato@xcengineering.xyz | +34 610 56 26 37

Ennovation Engineering Services Incorporated
Structural Engineer: Structural Engineering
4729 Dale-Curtain Dr, McFarland, WI 53558
kfrey@ennovationbuilt.com

Hovland's Heating · Ventilation · Air Conditioning Comfort for a lifetime.
Mechanical Engineer: HOVLAND'S HVAC
10954 E. Melby Street | Chippewa Falls, WI 54729
jhansen@hovlands-inc.com | 715.552.5595

Electrical Engineer: PRISM DESIGN ELECTRICAL CONSULTANS INC
E8403 State Rd 85 | Mondovi, WI 54755
bhalgren@prismdesign-electrical.com | 715.797.0602

TAILORED ENGINEERING
Plumbing Engineer: TAILORED ENGINEERING
1600 Aspen Commons | Ste 210 | Middleton, WI 53562
bnovak@tailoredeng.com | 608.209.7500

Date	Description
08.15.2019	75% CD Set

STRUCTURAL DETAILS
CANNERY TRAIL RESIDENCES - 1750 N OXFORD AVE. - EAU CLAIRE, WI

S214

14/08/2019 16:50:59