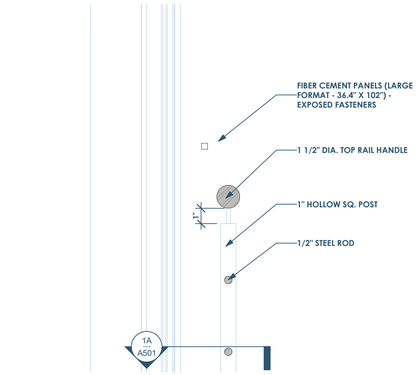

5D SECTION DETAIL - DECK - RAILING HEAD
3" = 1'-0"

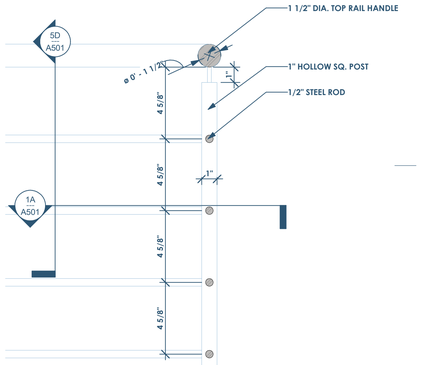

3D SECTION DETAIL - BALCONY - RAILING
3" = 1'-0"

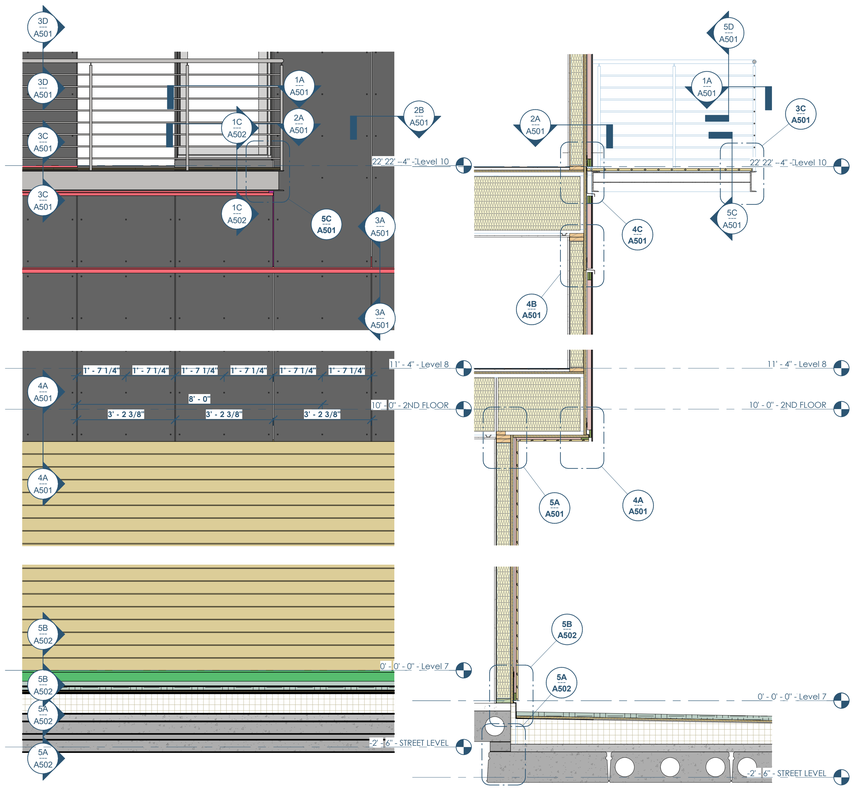

2C DETAIL ELEVATION - @ BALCONY - Dependent 1
1/2" = 1'-0"

1C WALL SECTION DETAIL - EXT WALL - @ BALCONY
1/2" = 1'-0"

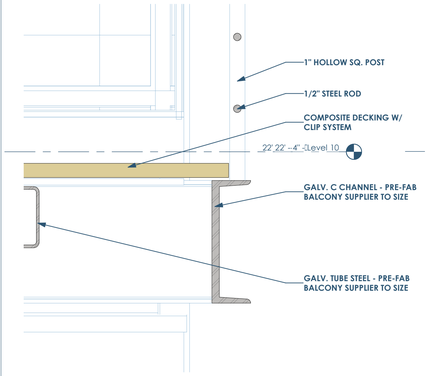

5C SECTION DETAIL - DECK - FLASHING @ FLOOR
3" = 1'-0"

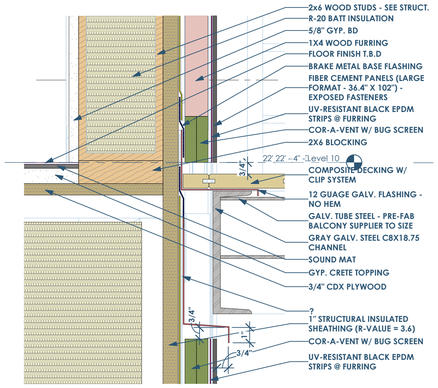

4C SECTION DETAIL - EXT WALL - @ BALCONY TOP
3" = 1'-0"

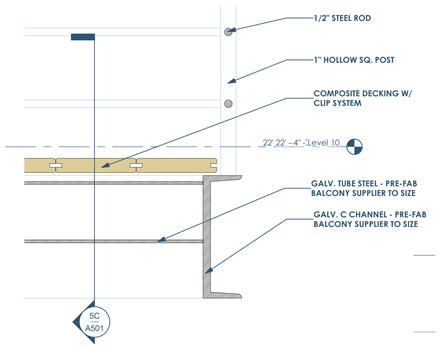

3C SECTION DETAIL - BALCONY - FLOOR & RAILING
3" = 1'-0"

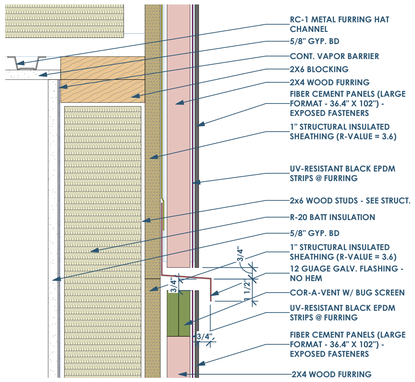

4B SECTION DETAIL - EXT WALL - @ BALCONY BASE
3" = 1'-0"

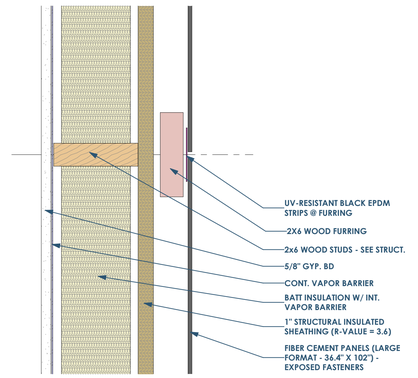

2B PLAN DETAIL - DECK - RAILING @ WALL JOIN2
3" = 1'-0"

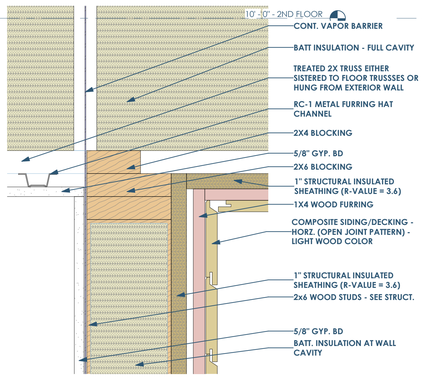

5A SECTION DETAIL - EXT WALL - WALL HEAD @ CEILING
3" = 1'-0"

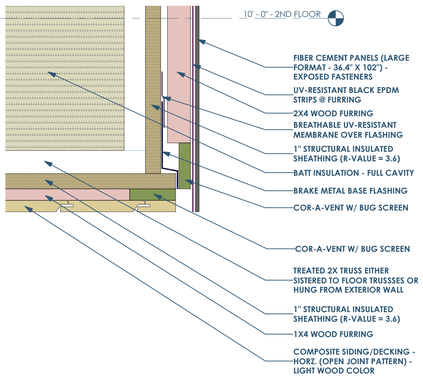

4A SECTION DETAIL - EAST/WEST - LOOKING NORTH - Dependent 16
3" = 1'-0"

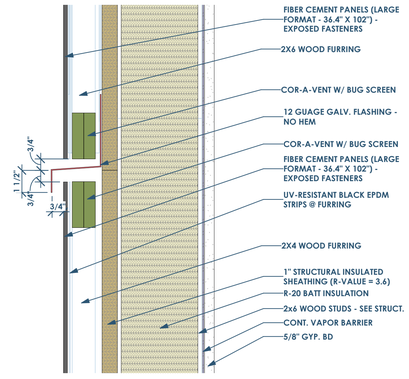

3A SECTION DETAIL - EXT WALL - @ FLASHING SPLIT
3" = 1'-0"

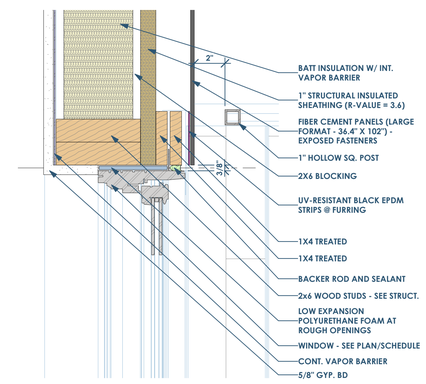

2A PLAN DETAIL - DECK - RAILING @ WALL JOIN
3" = 1'-0"

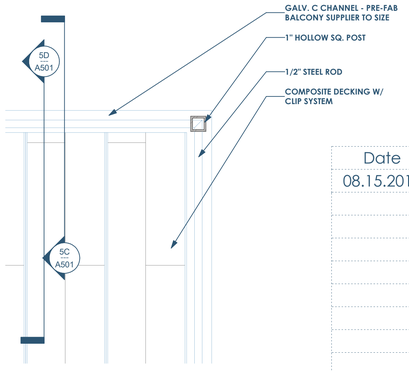

1A PLAN DETAIL - DECK - CORNER EDGE
3" = 1'-0"

CAPITAL GROUP
Developer: W Capital Group
tyler@wcapitalgroupre.com | 608.345.9848

Architect: OpeningDesign
316 W Washington Ave | Suite 675
Madison, WI 53703
ryan@openingdesign.com | 773.425.6456

General Contractor: ROYAL CONSTRUCTION
3653 Greenway Street | Eau Claire, WI 54701
jim@royalbuilt.com | 715-225-6377

Civil Engineer: CEDAR CORPORATION
604 Wilson Avenue |Menomonie, WI 54751
kevin.olum@cedarcorp.com | 715-235-9081

Structural Engineer: XC Structural Engineering
Calle Apolonio Morales, 628036 Madrid,
l.perezfatto@xcengineering.xyz | +34 610 56 26 37

Structural Engineer of Record: Ennovation
4729 Dale-Curtain Dr, McFarland, WI 53558
kfrey@ennovationbuilt.com

Mechanical Engineer: HOVLAND'S HVAC
10954 E. Melby Street |Chippewa Falls, WI 54729
jhansen@hovlands-inc.com | 715.552.5595

Electrical Engineer: PRISM DESIGN ELECTRICAL CONSULTANS INC
E8403 State Rd 85 |Mondovi, WI 54755
bhalgren@prismdesign-electrical.com | 715.797.0602

Plumbing Engineer: TAILORED ENGINEERING
1600 Aspen Commons | Ste 210 |Middleton, WI 53562
bnovak@tailoredeng.com | 608.209.7500

Date	Description
08.15.2019	75% CD Set

DETAILS - BALCONY

CANNERY TRAIL RESIDENCES - 1750 N OXFORD AVE. - EAU CLAIRE, WI

A501

8/15/2019 11:21:25 PM