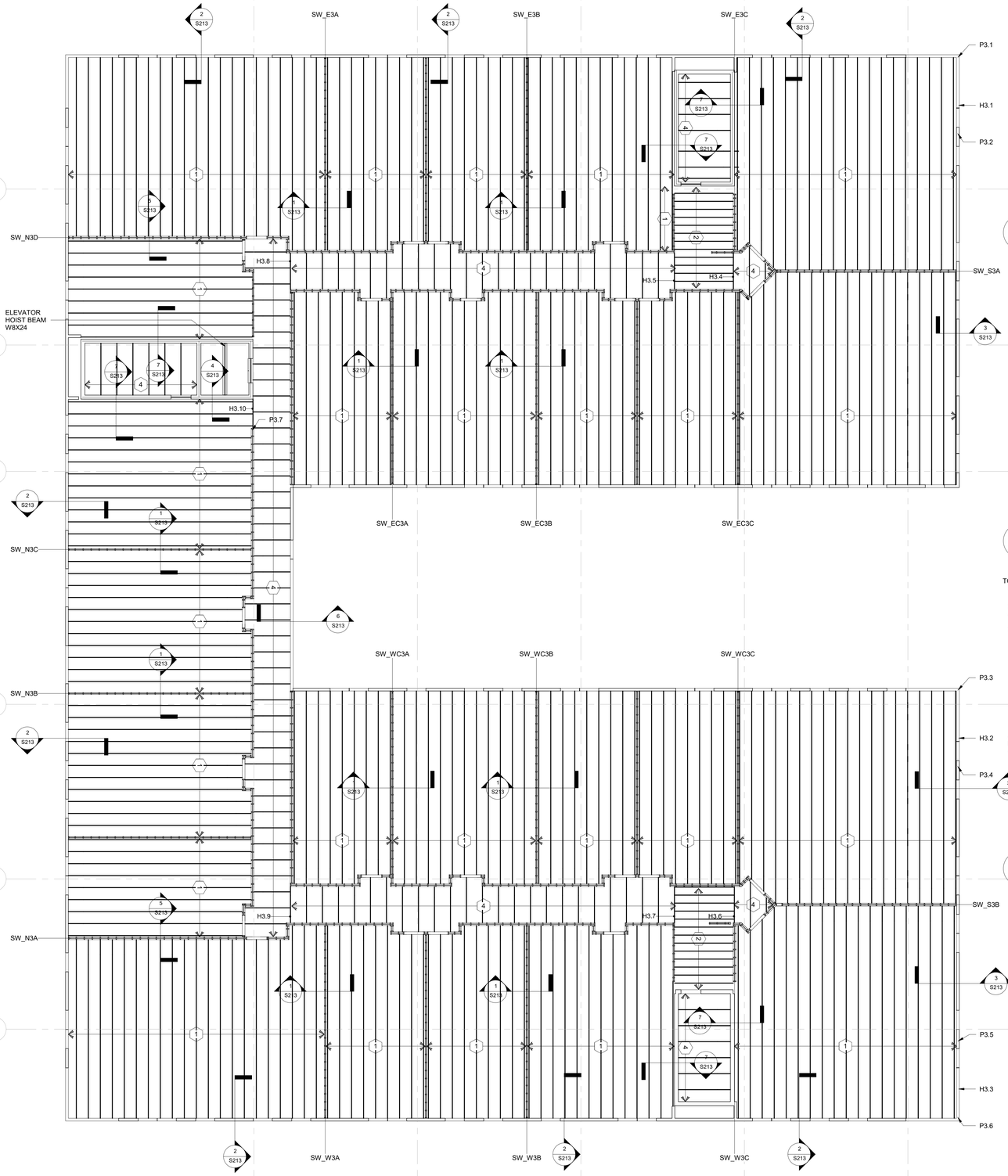

0 S213 FRAMING PLAN - ROOF
1/8" = 1'-0"

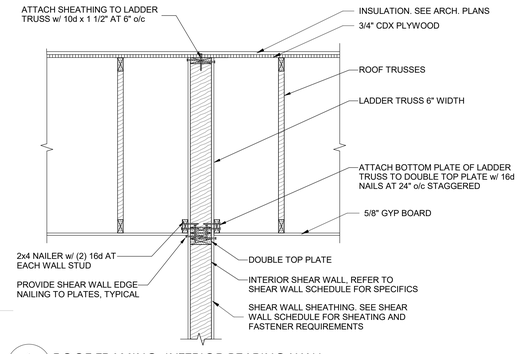

1 S213 ROOF FRAMING. INTERIOR BEARING WALL

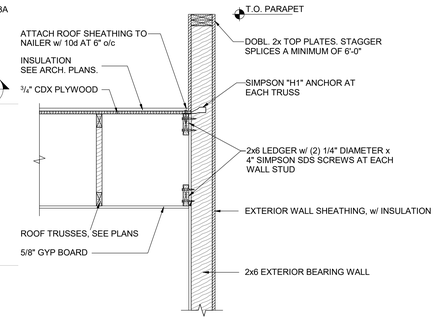

3 S213 ROOF FRAMING. EXTERIOR BEARING WALL

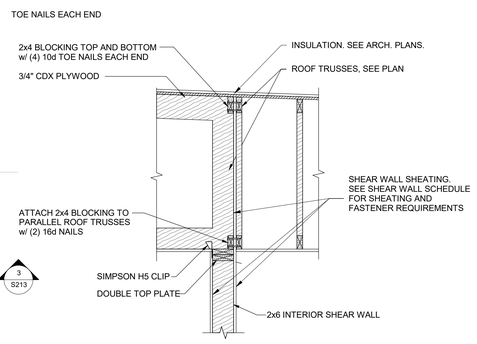

5 S213 ROOF FRAMING. INTERIOR SHEAR WALL

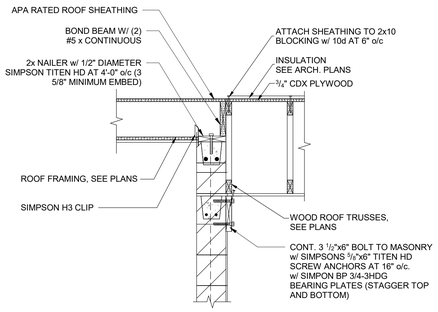

7 S213 ROOF FRAMING. CMU STAIR WALL

WOOD FLOOR PLAN KEYED NOTES:

1. VARIABLE DEPTH PARALLEL CHORD ROOF TRUSSES AT 24" o/c.
2. 3 1 / 2 "x6" JOISTS AT 16" o/c
3. PREFABRICATED SIDE HUNG METAL BALCONY, BY OTHERS
4. 3 1/2"x6" JOISTS AT 32" o/c.

"SEE HEADER/POST SCHEDULE IN S216 SHEET"
"SEE SHEAR WALL SCHEDULE IN S216 SHEET"

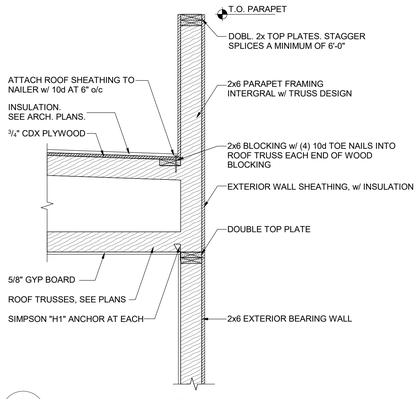

2 S213 ROOF FRAMING. EXTERIOR BEARING WALL

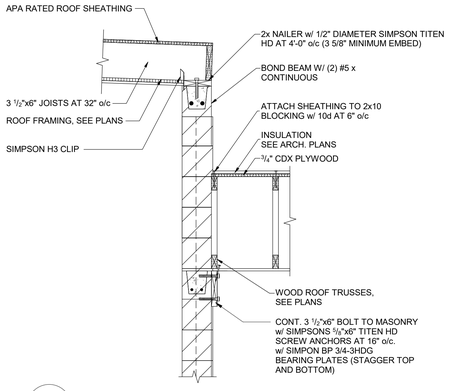

4 S213 ROOF FRAMING. CMU WALL

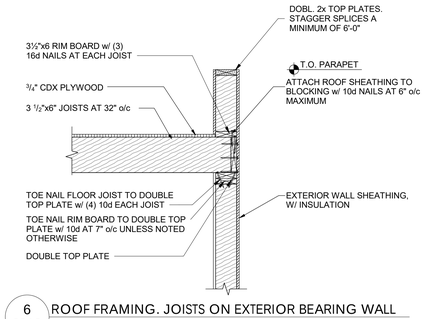

6 S213 ROOF FRAMING. JOISTS ON EXTERIOR BEARING WALL

CAPITAL GROUP
Developer: W Capital Group
tyler@wcapitalgroupre.com | 608.345.9848

Architect: OpeningDesign
316 W Washington Ave | Suite 675
Madison, WI 53703
ryan@openingdesign.com | 773.425.6456

ROYAL CONSTRUCTION
General Contractor: ROYAL CONSTRUCTION
3653 Greenway Street | Eau Claire, WI 54701
jim@royalbuilt.com | 715-225-6377

Cedar corporation
Civil Engineer: CEDAR CORPORATION
604 Wilson Avenue | Menomonie, WI 54751
kevin.oium@cedarcorp.com | 715-235-9081

Structural Engineer: Structural Engineering
Calle Apolonio Morales, 628036 Madrid,
l.pereztato@xcengineering.xyz | +34 610 56 26 37

Ennovation Engineering Services Incorporated
Structural Engineer: Structural Engineering
4729 Dale-Curtain Dr, McFarland, WI 53558
kfrey@ennovationbuilt.com

Hovland's Heating · Ventilation · Air Conditioning
Comfort for a lifetime.
Mechanical Engineer: HOVLAND'S HVAC
10954 E. Melby Street | Chippewa Falls, WI 54729
jhansen@hovlands-inc.com | 715.552.5595

Electrical Engineer: PRISM DESIGN ELECTRICAL CONSULTANS INC
E8403 State Rd 85 | Mondovi, WI 54755
bhalgren@prismdesign-electrical.com | 715.797.0602

TAILORED ENGINEERING
Plumbing Engineer: TAILORED ENGINEERING
1600 Aspen Commons | Ste 210 | Middleton, WI 53562
bnovak@tailoredeng.com | 608.209.7500

Date	Description
08.15.2019	75% CD Set
08.21.2019	Permit

FRAMING PLAN - ROOF

CANNERY TRAIL RESIDENCES - 1750 N OXFORD AVE. - EAU CLAIRE, WI

S213

21/08/2019 12:22:07