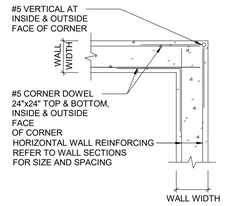

1 S200 CORNER REINF.

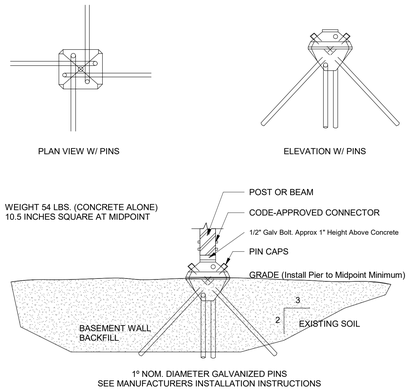

2 S200 DIAMOND PIER DP-50

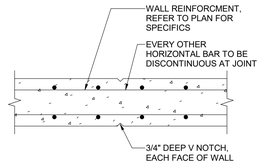

NOTES:
1. TOP AND BOTTOM WALL BARS ARE TO EXTEND THROUGH JOINT.
2. CONTROL JOINT SPACING SHALL BE 25'-0" MAXIMUM.

3 S200 WALL CONTROL JOINT

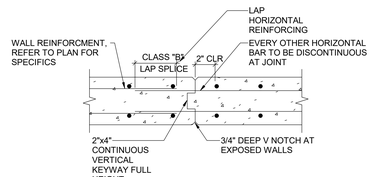

NOTES:
1. TOP AND BOTTOM BARS ARE TO EXTEND THROUGH JOINT.
2. PROVIDE AT END OF EACH WALL POUR.

4 S200 WALL CONSTRUCTION JOINT

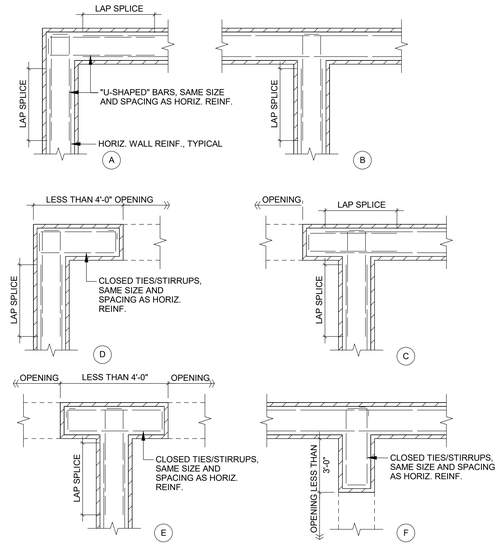

5 S200 MASONRY WALL - REINF.DETAILS

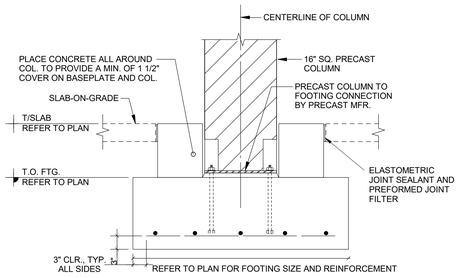

6 S200 PRECAST COLUMN ON CONCRETE FOOTING

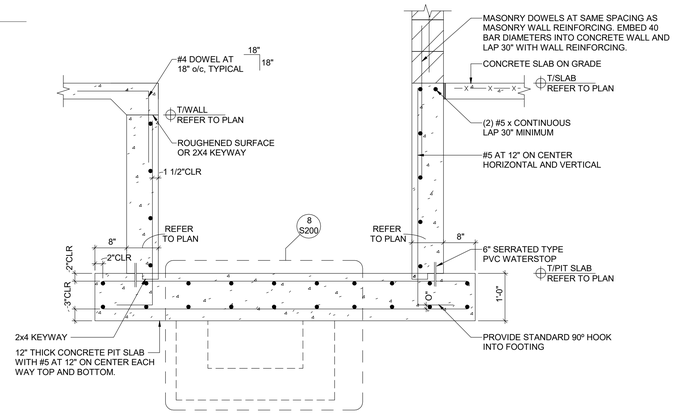

7 S200 ELEVATOR PIT SECTION

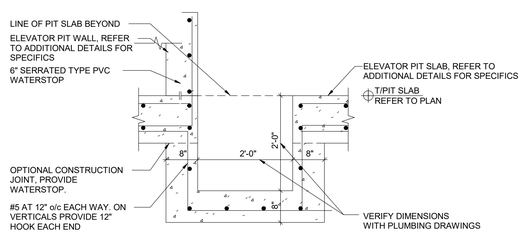

8 S200 ELEVATOR PIT SUMP CROCK

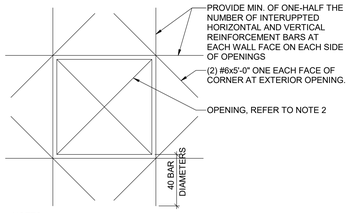

NOTES:
1. ADDED REINFORCEMENT AS SHOWN SHALL BE PROVIDED FOR ALL OPENINGS 12" DIAMETER OR 12" SQUARE AND LARGER IN SIZE, UNLESS DETAILED ELSEWHERE.
2. SPACE ADDED BARS AS CLOSE AS PERMISSIBLE BY CODE FOR THE REQUIRED BAR SIZE.
3. VERIFY SIZE AND LOCATION OF OPENINGS WITH TRADE OR SUBCONTRACTOR WHICH REQUIRES OPENINGS.

9 S200 REINFORCEMENT AROUND CONCRETE WALL OPENING

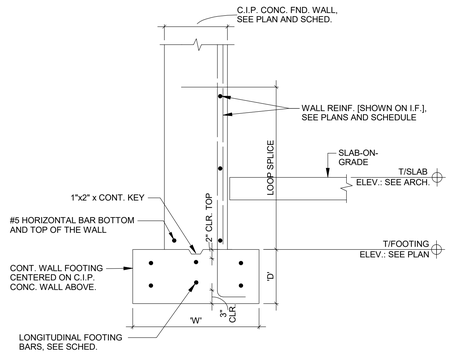

NOTES:
1. WATERPROOFING, INSULATION, and DRAINAGE SYSTEM EXTERIOR SIDE OF WALL IS NOT SHOWN, SEE ARCH. FOR REQUIREMENTS.

12 S200 CONCRETE WALL ON FOOTING

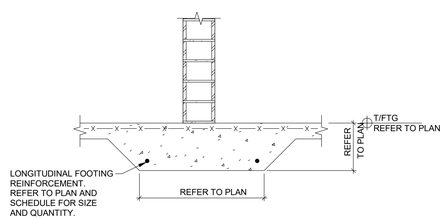

10 S200 INTERIOR STUD WALL ON THICKENED SLAB

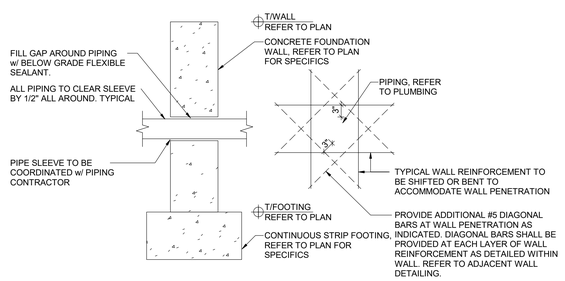

11 S200 PIPE PENETRATION AT FOUNDATION WALL

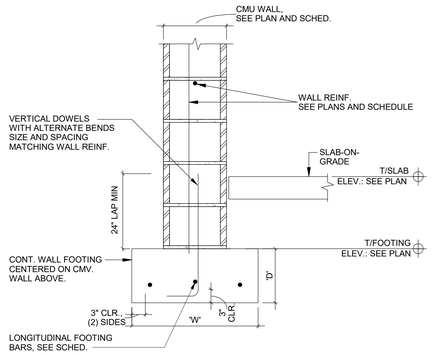

NOTES:
1. WATERPROOFING, INSULATION, and DRAINAGE SYSTEM EXTERIOR SIDE OF WALL IS NOT SHOWN, SEE ARCH. FOR REQUIREMENTS.

13 S200 CMU WALL ON FOOTING

CAPITAL GROUP
Developer: W Capital Group
tyler@wcapitalgroupre.com | 608.345.9848

Architect: OpeningDesign
316 W Washington Ave | Suite 675
Madison, WI 53703
ryan@openingdesign.com | 773.425.6456

General Contractor: ROYAL CONSTRUCTION
3653 Greenway Street | Eau Claire, WI 54701
jim@royalbuilt.com | 715-225-6377

Civil Engineer: CEDAR CORPORATION
604 Wilson Avenue | Menomonie, WI 54751
kevin.oium@cedarcorp.com | 715-235-9081

Structural Engineer: Structural Engineering
Calle Apolonio Morales, 628036 Madrid,
l.pereztato@xcengineering.xyz | +34 610 56 26 37

Structural Engineer: Structural Engineering
4729 Dale-Curtain Dr, McFarland, WI 53558
kfrey@ennovationbuilt.com

Mechanical Engineer: HOVLAND'S HVAC
10954 E. Melby Street | Chippewa Falls, WI 54729
jhansen@hovlands-inc.com | 715.552.5595

Electrical Engineer: PRISM DESIGN ELECTRICAL CONSULTANS INC
E8403 State Rd 85 | Mondovi, WI 54755
bhalgren@prismdesign-electrical.com | 715.797.0602

Plumbing Engineer: TAILORED ENGINEERING
1600 Aspen Commons | Ste 210 | Middleton, WI 53562
bnovak@tailoredeng.com | 608.209.7500

Date	Description
07.08.2019	Footing and Foundation Plan Permit

STRUCTURAL DETAILS

CANNERY TRAIL RESIDENCES - 1750 N OXFORD AVE. - EAU CLAIRE, WI

S200

09/07/2019 12:13:46