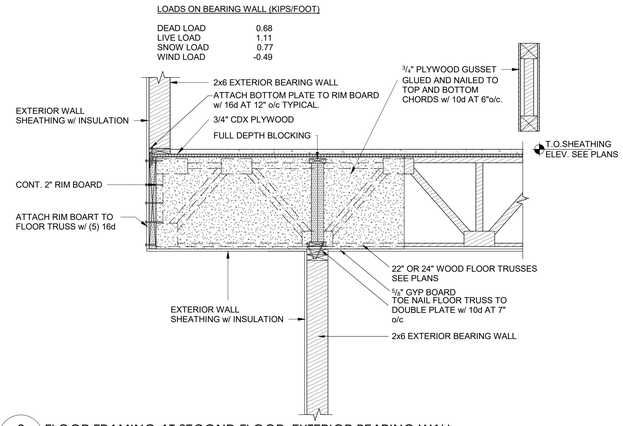

6 S214 FLOOR FRAMING AT SECOND FLOOR. EXTERIOR BEARING WALL

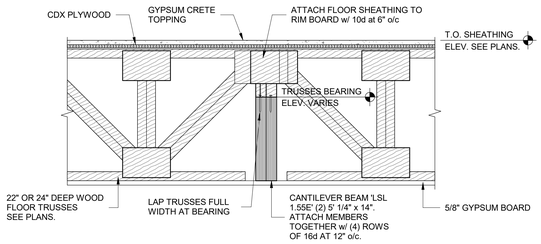

7 S214 CANTILEVER. SECTION

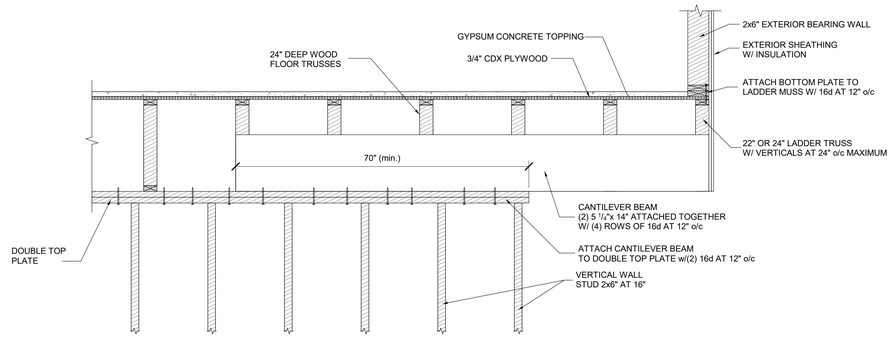

8 S214 CANTILEVER. LATERAL VIEW

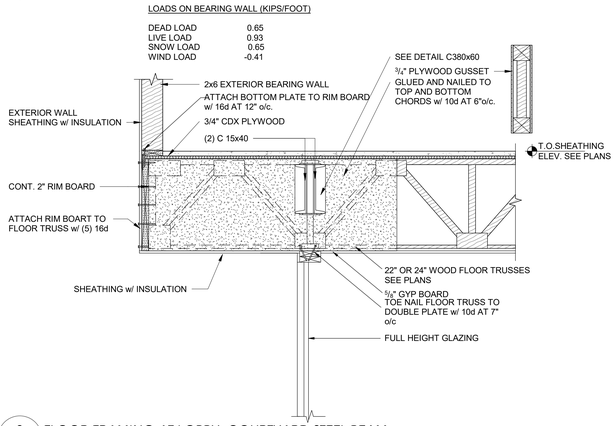

9 S214 FLOOR FRAMING AT LOBBY. COURTYARD STEEL BEAM

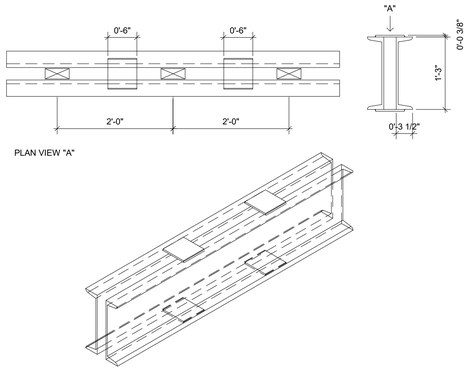

C15x40 DETAIL

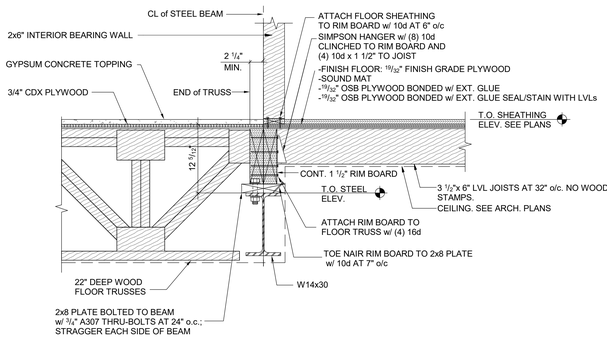

10 S214 FLOOR FRAMING AT LOBBY. CORRIDOR STEEL BEAM

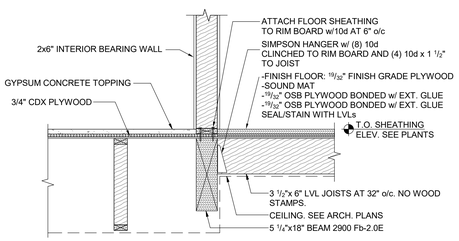

11 S214 FLOOR FRAMING AT LOBBY. INTERIOR BEARING WALL

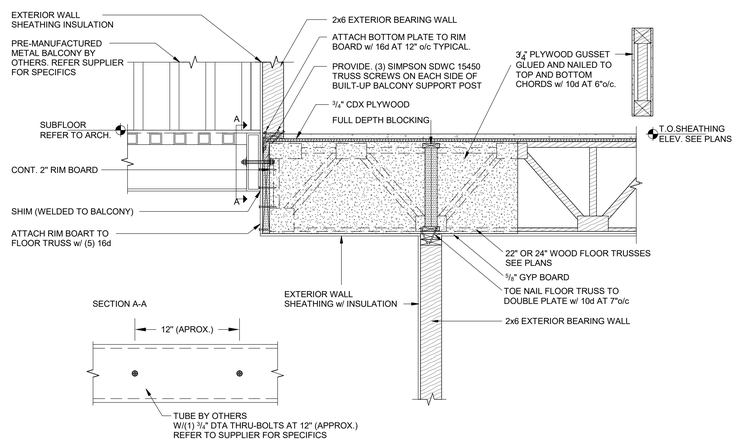

12 S214 METAL BALCONY BASE CONNECTION 2nd FLOOR

CAPITAL GROUP
Developer: W Capital Group
tyler@wcapitalgroupre.com | 608.345.9848

Architect: OpeningDesign
316 W Washington Ave | Suite 675
Madison, WI 53703
ryan@openingdesign.com | 773.425.6456

General Contractor: ROYAL CONSTRUCTION
3653 Greenway Street | Eau Claire, WI 54701
jim@royalbuilt.com | 715-225-6377

Civil Engineer: CEDAR CORPORATION
604 Wilson Avenue | Menomonie, WI 54751
kevin.oium@cedarcorp.com | 715-235-9081

Structural Engineer: XC Structural Engineering
Calle Apolonio Morales, 628036 Madrid,
l.pereztato@xcengineering.xyz | +34 610 56 26 37

Structural Engineer of Record: Ennovation
4729 Dale-Curtain Dr, McFarland, WI 53558
kfrey@ennovationbuilt.com

Mechanical Engineer: HOVLAND'S HVAC
10954 E. Melby Street | Chippewa Falls, WI 54729
jhansen@hovlands-inc.com | 715.552.5595

Electrical Engineer: PRISM DESIGN ELECTRICAL CONSULTANS INC
E8403 State Rd 85 | Mondovi, WI 54755
bhalgren@prismdesign-electrical.com | 715.797.0602

Plumbing Engineer: TAILORED ENGINEERING
1600 Aspen Commons | Ste 210 | Middleton, WI 53562
bnovak@tailoredeng.com | 608.209.7500

Date	Description
08.15.2019	75% CD Set
08.21.2019	Permit
09.25.2019	<Progress>

STRUCTURAL DETAILS

CANNERY TRAIL RESIDENCES - 1750 N OXFORD AVE. - EAU CLAIRE, WI

S214

04/10/2019 13:20:57