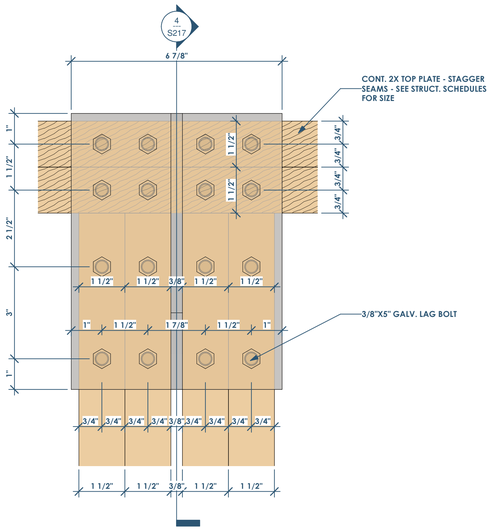

3 S217 TYP. BALC. DETAIL - FRONT
6" = 1'-0"

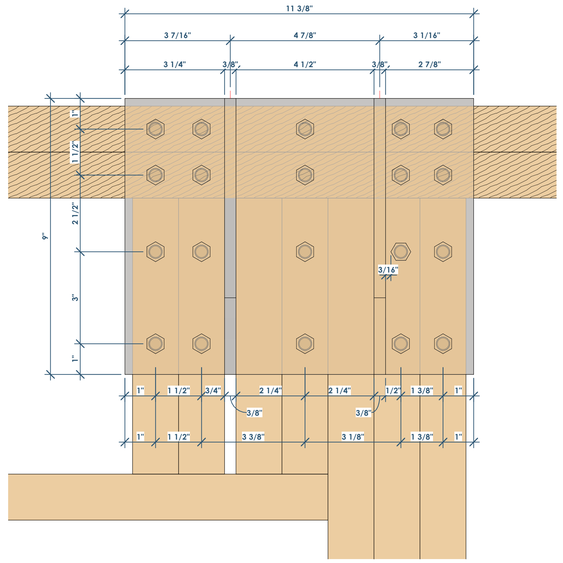

5 S217 LONG BALC. MID DETAIL - FRONT1
6" = 1'-0"

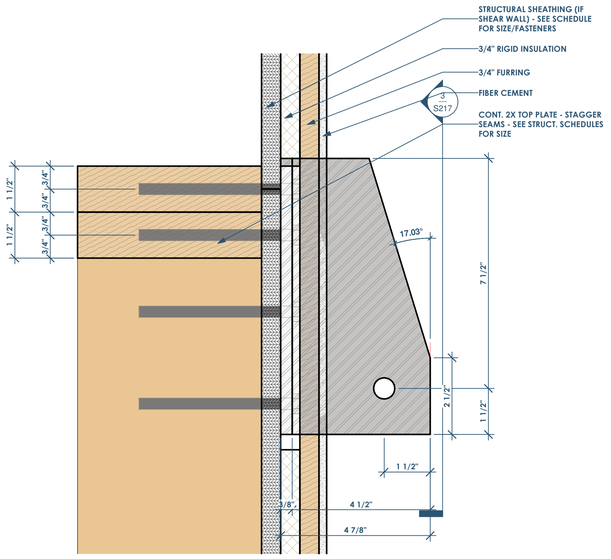

4 S217 BRACKET DETAIL - SIDE
6" = 1'-0"

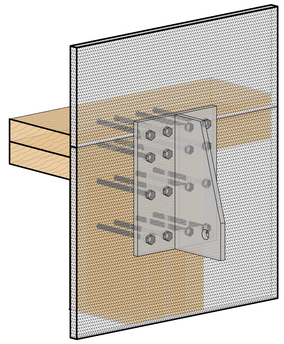

1 S217 TYPICAL DETAIL

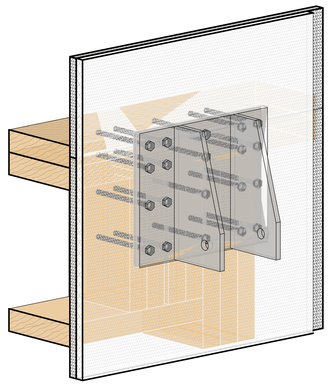

2 S217 LONG BALCONY MID-BRACKET

CAPITAL GROUP
Developer: W Capital Group
tyler@wcapitalgroupre.com | 608.345.9848

Architect: OpeningDesign
316 W Washington Ave | Suite 675
Madison, WI 53703
ryan@openingdesign.com | 773.425.6456

General Contractor: ROYAL CONSTRUCTION
3653 Greenway Street | Eau Claire, WI 54701
jim@royalbuilt.com | 715-225-6377

Civil Engineer: CEDAR CORPORATION
604 Wilson Avenue |Menomonie, WI 54751
kevin.olum@cedarcorp.com | 715-235-9081

Structural Engineer: XC Structural Engineering
Calle Apolonio Morales, 628036 Madrid,
l.perezfalo@xcengineering.xyz | +34 610 56 26 37

Structural Engineer of Record: Ennovation
4729 Dale-Curtain Dr, McFarland, WI 53558
kfrey@ennovationbuilt.com

Mechanical Engineer: HOVLAND'S HVAC
10954 E. Melby Street |Chippewa Falls, WI 54729
jhansen@hovlands-inc.com | 715.552.5595

Electrical Engineer: PRISM DESIGN ELECTRICAL CONSULTANS INC
E8403 State Rd 85 |Mondovi, WI 54755
bhalgren@prismdesign-electrical.com | 715.797.0602

Plumbing Engineer: TAILORED ENGINEERING
1600 Aspen Commons | Ste 210 |Middleton, WI 53562
bnovak@tailoredeng.com | 608.209.7500

WISCONSIN
RYAN P. SCHULTZ
A-11197-5
STOUGHTON, WI
ARCHITECT

Date	Description
05.15.2020	Permit Revision #4
05.15.2020	Balcony Submittal
07.02.2020	Permit Revision #5

STRUCTURAL DETAILS
CANNERY TRAIL RESIDENCES - 1750 N OXFORD AVE. - EAU CLAIRE, WI

S217

2020-07-15 2:28:32 PM