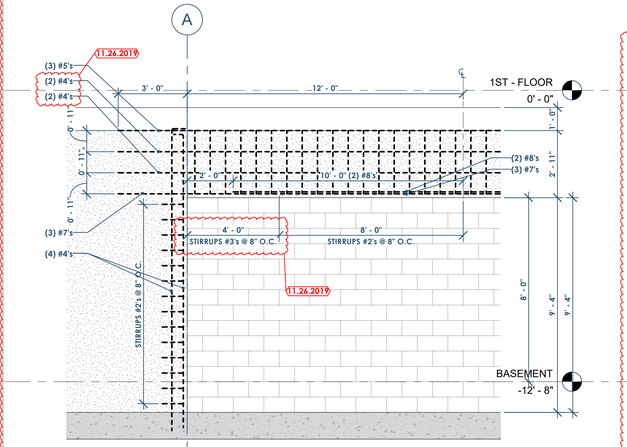

1 S401 DETAIL - REINFORCING AT SOUTH WALL LINTELS
3/8" = 1'-0"

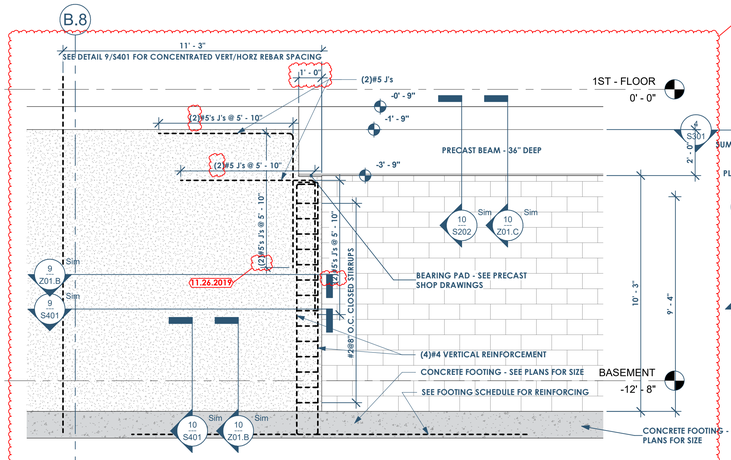

8 S401 DETAIL - REINFORCING AT SOUTH WALL PRECAST LINTELS
3/8" = 1'-0"

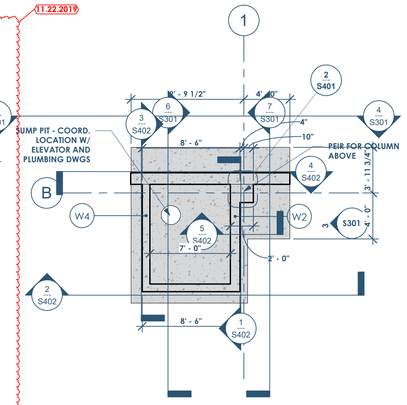

3 S401 FOUNDATION PLAN AT ELEVATOR PIT
3/16" = 1'-0"

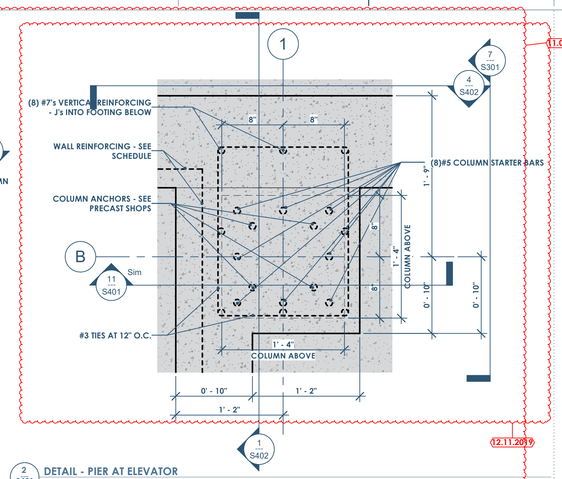

2 S401 DETAIL - PIER AT ELEVATOR
1 1/2" = 1'-0"

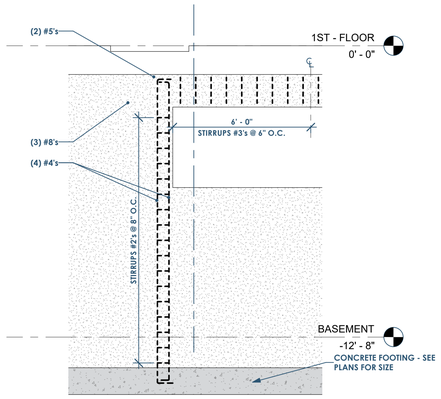

6 S401 DETAIL - REBAR AT AIR INTAKE
3/8" = 1'-0"

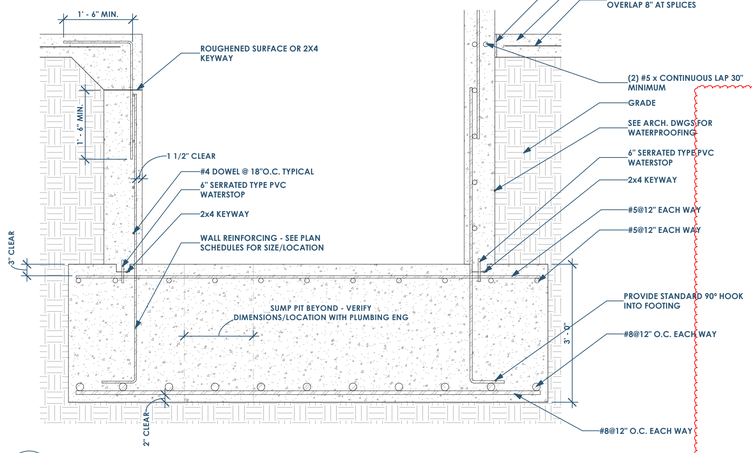

4 S401 ELEVATOR PIT

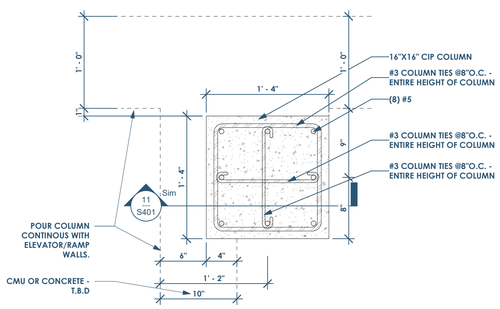

12 S401 DETAIL - PLAN - PIER @ ELEVATOR
1 1/2" = 1'-0"

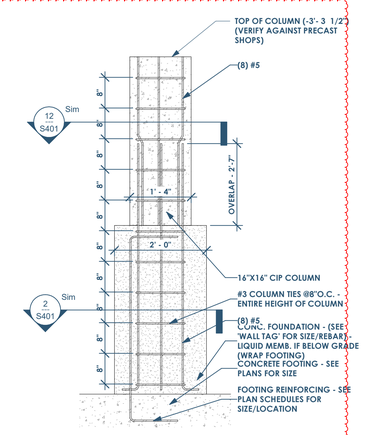

11 S401 DETAIL - SECTION - PIER @ ELEVATOR
3/4" = 1'-0"

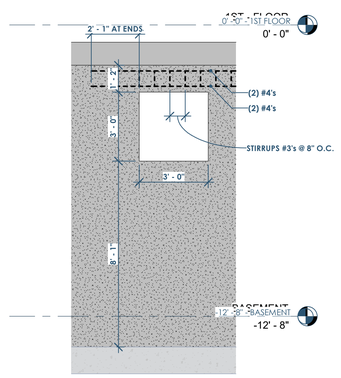

7 S401 DETAIL - REBAR AT EXHAUST LOUVERS
3/8" = 1'-0"

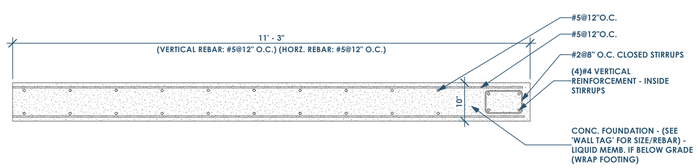

9 S401 DETAILS - CONC. & CMU - FOUNDATION FOOTER & WALL PLAN
3/4" = 1'-0"

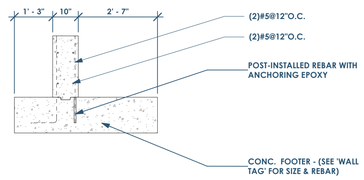

10 S401 DETAILS - CONC. & CMU - FOUNDATION FOOTER & WALL SECTION
1/2" = 1'-0"

CAPITAL GROUP
Developer: W Capital Group
tyler@wcapitalgroupre.com | 608.345.9848

Architect: OpeningDesign
316 W Washington Ave | Suite 675
Madison, WI 53703
ryan@openingdesign.com | 773.425.6456

General Contractor: ROYAL CONSTRUCTION
3653 Greenway Street | Eau Claire, WI 54701
jim@royalbuilt.com | 715-225-6377

Civil Engineer: CEDAR CORPORATION
604 Wilson Avenue |Menomonie, WI 54751
kevin.olum@cedarcorp.com | 715-235-9081

Structural Engineer: XC Structural Engineering
Calle Apolonio Morales, 628036 Madrid,
l.perezfarto@xcengineering.xyz | +34 610 56 26 37

Structural Engineer of Record: Ennovation
4729 Dale-Curtain Dr, McFarland, WI 53558
kfrey@ennovationbuilt.com

Mechanical Engineer: HOVLAND'S HVAC
10954 E. Melby Street |Chippewa Falls, WI 54729
jhansen@hovlands-inc.com | 715.552.5595

Electrical Engineer: PRISM DESIGN ELECTRICAL CONSULTANS INC.
E8403 State Rd 85 |Mondovi, WI 54755
bhalgren@prismdesign-electrical.com | 715.797.0602

Plumbing Engineer: TAILORED ENGINEERING
1600 Aspen Commons | Ste 210 |Middleton, WI 53562
bnovak@tailoredeng.com | 608.209.7500

Date	Description
10.09.2019	IFC - Foundation
11.07.2019	Updated Foundation
11.22.2019	Updated Foundation
11.26.2019	South Wall at Precast
12.11.2019	Ramp & Elevator
05.15.2020	Permit Revision #4

STRUCTURAL DETAILS
CANNERY TRAIL RESIDENCES - 1750 N OXFORD AVE. - EAU CLAIRE, WI

S401

5/14/2020 5:57:36 PM