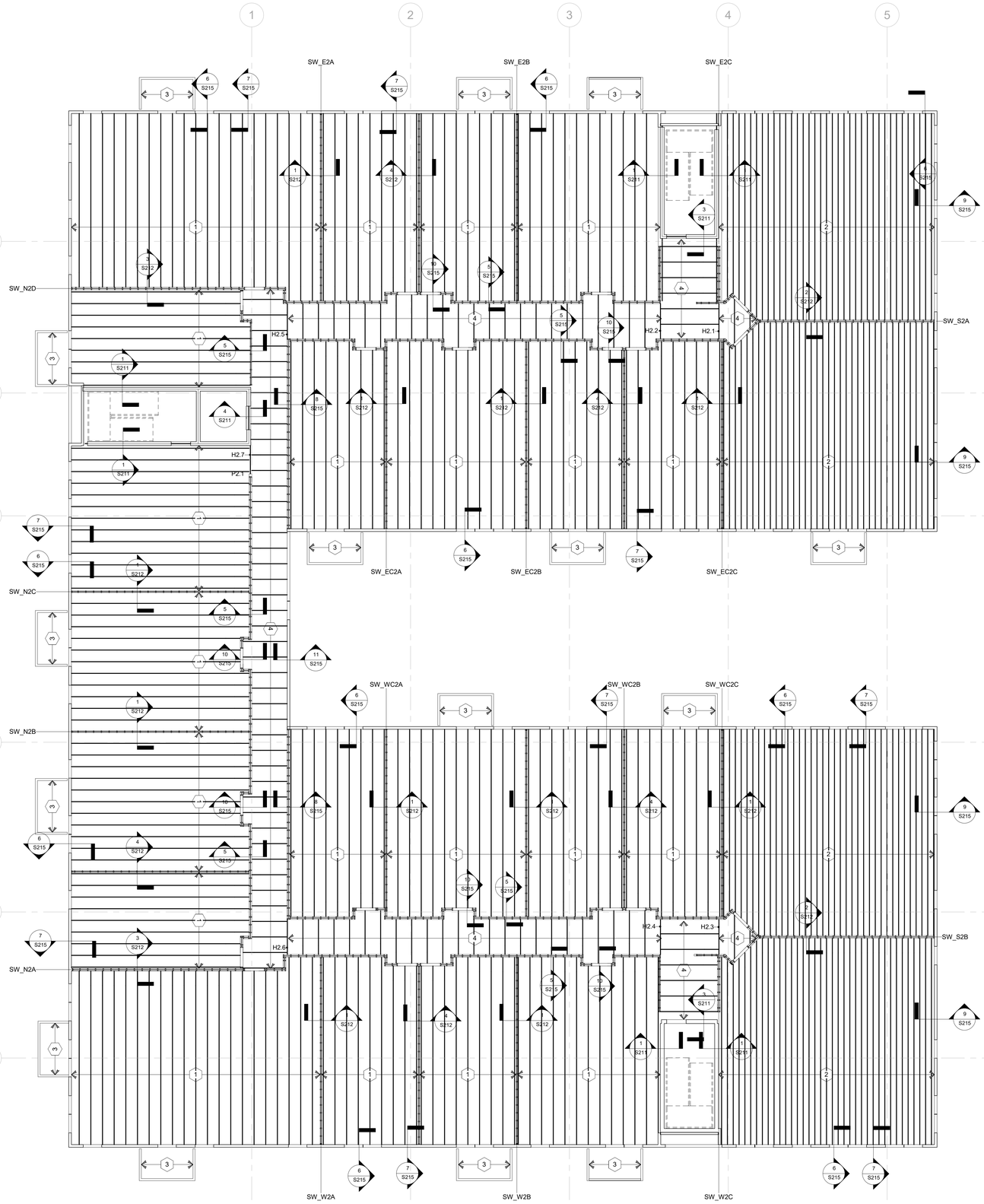

0 S212 FRAMING PLAN - 3RD FLOOR
1/8" = 1'-0"

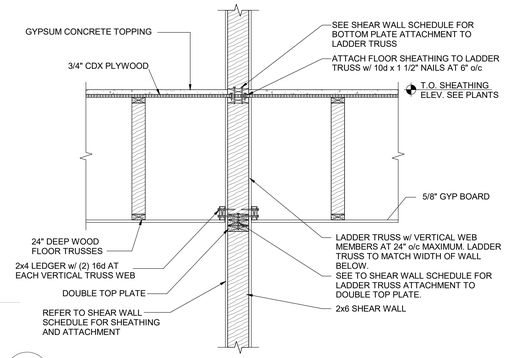

1 S212 FLOOR FRAMING. INTERIOR SHEAR WALL

WOOD FLOOR PLAN KEYED NOTES:

1. 24" DEEP PARALLEL CHORD FLOOR TRUSSES AT 24" o/c.
2. 24" DEEP PARALLEL CHORD FLOOR TRUSSES AT 12" o/c.
3. PREFABRICATED SIDE HUNG METAL BALCONY, BY OTHERS
4. 3 1/2"x6" JOISTS AT 32" o/c.

"SEE HEADER/POST SCHEDULE IN S216 SHEET"
"SEE SHEAR WALL SCHEDULE IN S216 SHEET"

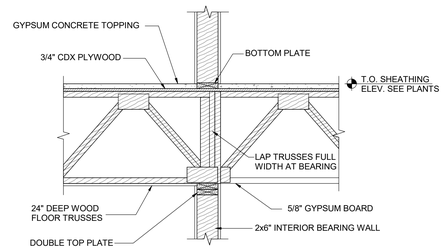

2 S212 FLOOR FRAMING. INTERIOR BEARING WALL

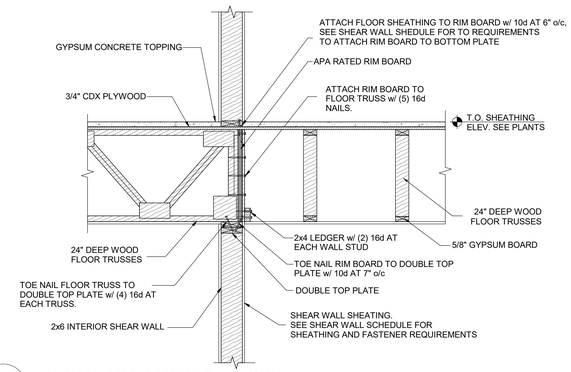

3 S212 FLOOR FRAMING INTERIOR SHEAR WALL

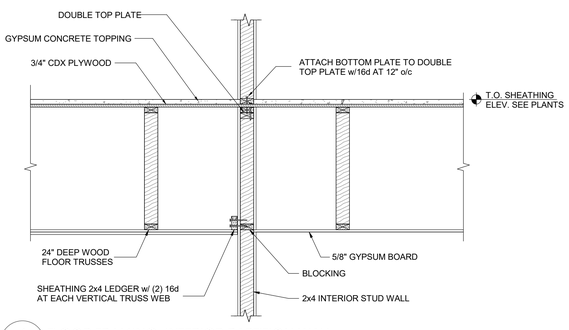

4 S212 FLOOR FRAMING. INTERIOR PARTITION WALL

CAPITAL GROUP
Developer: W Capital Group
tyler@wcapitalgroupre.com | 608.345.9848

Architect: OpeningDesign
316 W Washington Ave | Suite 675
Madison, WI 53703
ryan@openingdesign.com | 773.425.6456

General Contractor: ROYAL CONSTRUCTION
3653 Greenway Street | Eau Claire, WI 54701
jim@royalbuilt.com | 715-225-6377

Civil Engineer: CEDAR CORPORATION
604 Wilson Avenue | Menomonie, WI 54751
kevin.oium@cedarcorp.com | 715-235-9081

Structural Engineer: Structural Engineering
Calle Apolonio Morales, 628036 Madrid,
l.pereztato@xcengineering.xyz | +34 610 56 26 37

Structural Engineer: Structural Engineering
4729 Dale-Curtain Dr, McFarland, WI 53558
kfrey@ennovationbuilt.com

Mechanical Engineer: HOVLAND'S HVAC
10954 E. Melby Street | Chippewa Falls, WI 54729
jhansen@hovlands-inc.com | 715.552.5595

Electrical Engineer: PRISM DESIGN ELECTRICAL CONSULTANS INC
E8403 State Rd 85 | Mondovi, WI 54755
bhalgren@prismdesign-electrical.com | 715.797.0602

Plumbing Engineer: TAILORED ENGINEERING
1600 Aspen Commons | Ste 210 | Middleton, WI 53562
bnovak@tailoredeng.com | 608.209.7500

Date	Description
08.15.2019	75% CD Set

FRAMING PLAN - 3RD FLOOR

CANNERY TRAIL RESIDENCES - 1750 N OXFORD AVE. - EAU CLAIRE, WI

S212

14/08/2019 16:50:45