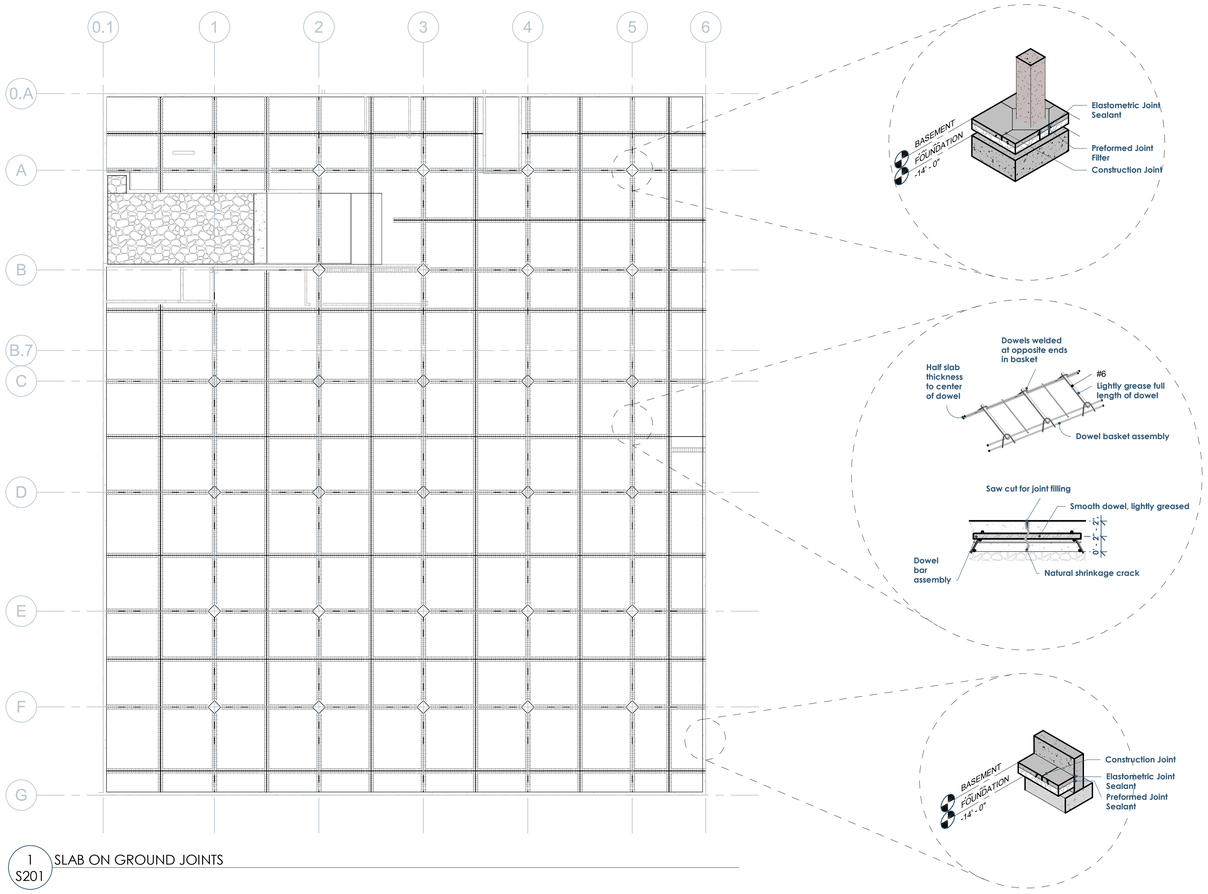

1 S201 SLAB ON GROUND JOINTS

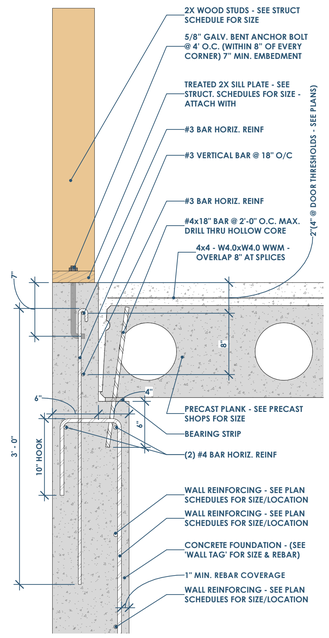

3 S201 DETAIL - PRECAST & CONC. - PLANK PARALLEL TO WALL
1 1/2" = 1'-0"

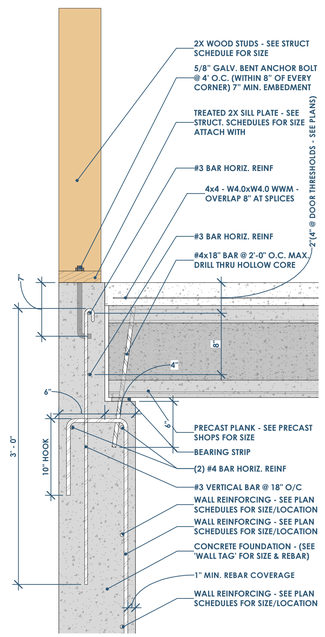

5 S201 DETAIL - PRECAST & CONC. - PLANK PERPENDICULAR TO WALL
1 1/2" = 1'-0"

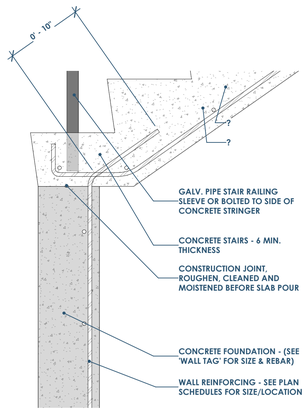

7 S201 DETAIL - STAIR - BASE
1 1/2" = 1'-0"

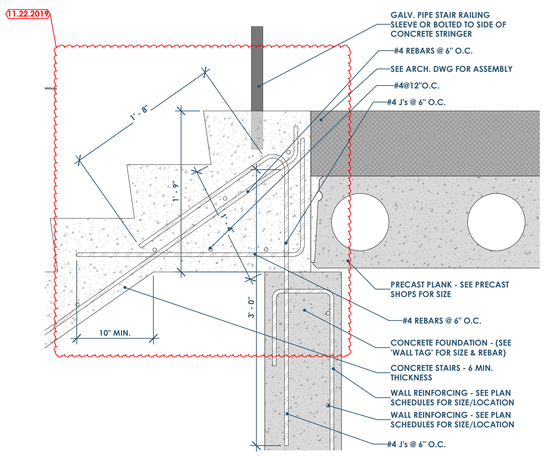

9 S201 DETAIL - STAIR - HEAD
1 1/2" = 1'-0"

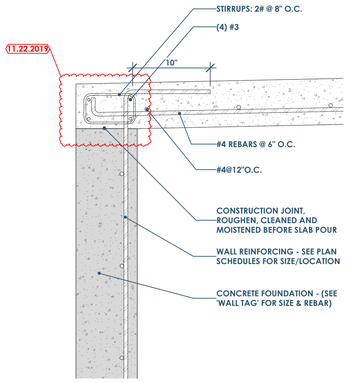

10 S201 DETAIL - EXTERIOR SLABS
1 1/2" = 1'-0"

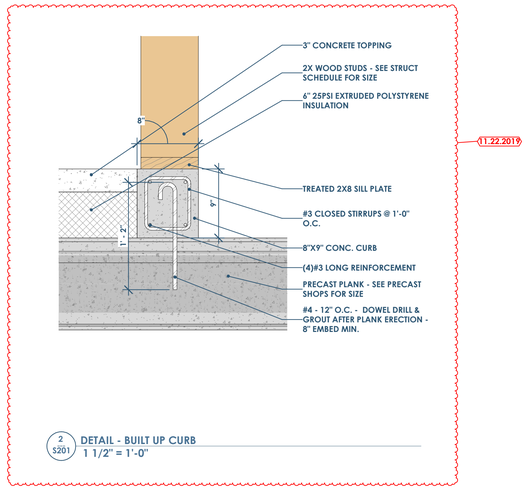

2 S201 DETAIL - BUILT UP CURB
1 1/2" = 1'-0"

CAPITAL GROUP
Developer: W Capital Group
tyler@wcapitalgroupre.com | 608.345.9848

Architect: OpeningDesign
316 W Washington Ave | Suite 675
Madison, WI 53703
ryan@openingdesign.com | 773.425.6456

General Contractor: ROYAL CONSTRUCTION
3653 Greenway Street | Eau Claire, WI 54701
jim@royalbuilt.com | 715-225-6377

Civil Engineer: CEDAR CORPORATION
604 Wilson Avenue |Menomonie, WI 54751
kevin.olum@cedarcorp.com | 715-235-9081

Structural Engineer: XC Structural Engineering
Calle Apolonio Morales, 628036 Madrid,
l.perezfarto@xcengineering.xyz | +34 610 56 26 37

Structural Engineer of Record: Ennovation
4729 Dale-Curtain Dr, McFarland, WI 53558
kfrey@ennovationbuilt.com

Mechanical Engineer: HOVLAND'S HVAC
10954 E. Melby Street |Chippewa Falls, WI 54729
jhansen@hovlands-inc.com | 715.552.5595

Electrical Engineer: PRISM DESIGN ELECTRICAL CONSULTANS INC
E8403 State Rd 85 |Mondovi, WI 54755
bhalgren@prismdesign-electrical.com | 715.797.0602

Plumbing Engineer: TAILORED ENGINEERING
1600 Aspen Commons | Ste 210 |Middleton, WI 53562
bnovak@tailoredeng.com | 608.209.7500

Date	Description
07.08.2019	Footing/Foundation Permit
08.21.2019	Permit
10.09.2019	IFC - Foundation
10.15.2019	Updated Foundation Details
11.07.2019	Updated Foundation
11.22.2019	Updated Foundation

STRUCTURAL DETAILS

CANNERY TRAIL RESIDENCES - 1750 N OXFORD AVE. - EAU CLAIRE, WI

S201

11/22/2019 3:37:01 PM