THESE DETAILS ILLUSTRATE HEAD CONDITIONS AT GL B.8 AND 1,2,3.

THE STEEL ALONG GL 0, NEAR ENTRY, HAS A SIMILAR HEAD CONDITION AS THESE DETAILS.

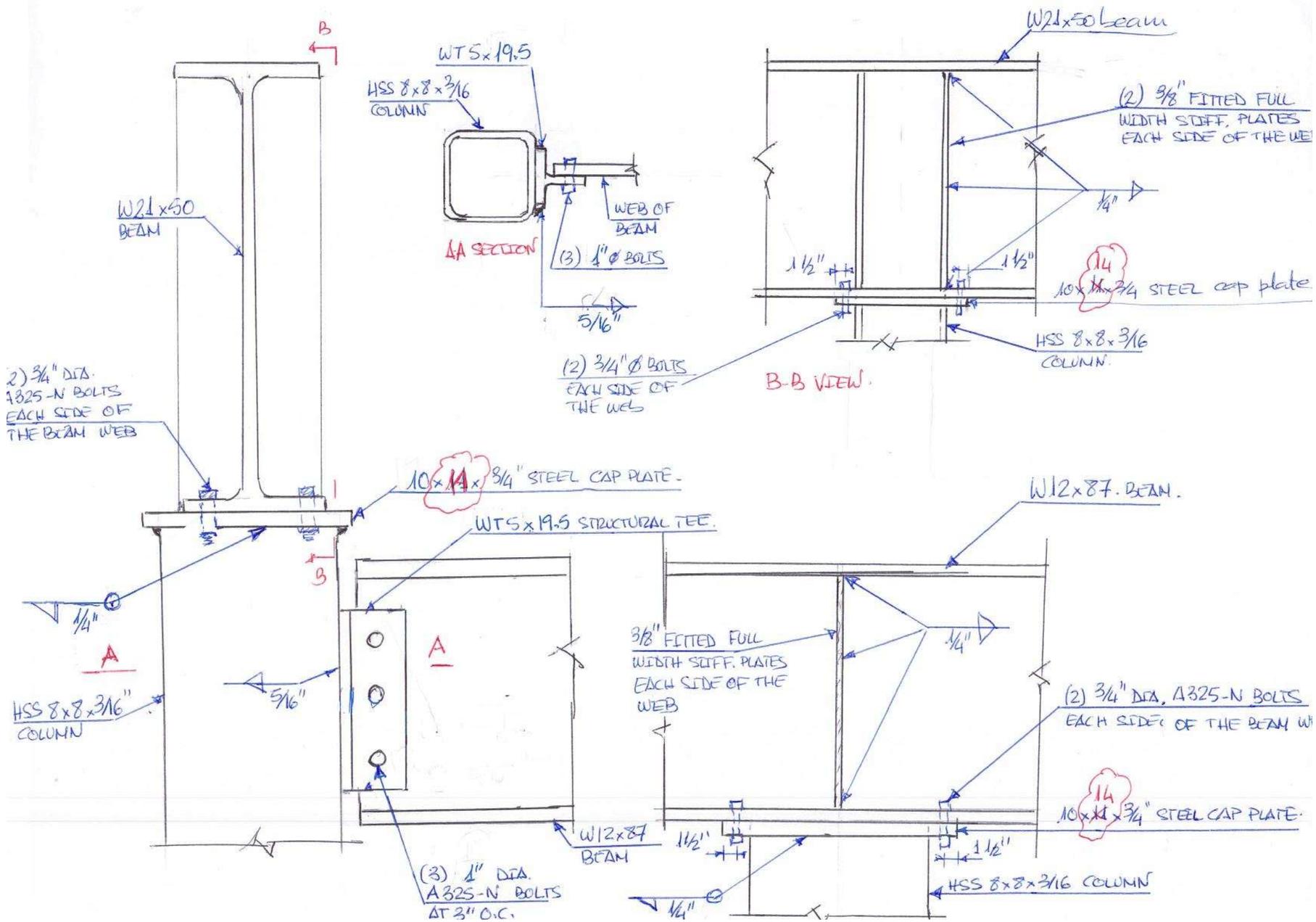

Architect: OpeningDesign
316 W Washington Ave | Suite 675 | Madison, WI 53703
ryan@openingdesign.com | 773.425.6456

Structural Engineer: XC Structural Engineering
Calle Apolonio Morales, 628036 Madrid
l.pereztato@xcengineering.xyz | +34 610 56 26 37

CANNERY TRAIL RESIDENCES
1750 N OXFORD AVE. - EAU CLAIRE, WI
STEEL - HEAD DETAILS - Z-07

Date	Description
02.20.2020	STEEL - HEAD DETAILS