DESIGN DATA

APPLICABLE CODES/STANDARDS:
.....INTERNATIONAL BUILDING CODE - 2018
.....ASCE 7-16 MIN DESIGN LOADS FOR BUILDINGS AND OTHER STRUCTURES, ASCE/SEI

STRUCTURAL DESIGN STANDARDS (DESIGN SHALL CONFORM TO THE CURRENT EDITION UNDER THE APPLICABLE CODE)
.....ACI 318 BUILDING CODE REQUIREMENTS FOR STRUCTURAL CONCRETE AND COMMENTARY
.....ACI 530/530.1 BLDG CODE REQUIREMENTS AND SPECS FOR MASONRY STRUCTURES (AND RELATED COMMENTARIES)
.....ANSI/AISC 360-16 SPECIFICATIONS FOR STRUCTURAL STEEL BUILDINGS
.....AWS D1.1/D1.1M STRUCTURAL WELDING CODE-STEEL

BUILDING DESIGN LOADS/CRITERIA

DESIGN LIVE LOADS:

.....FLOOR FRAMING (RETAIL, OFFICE, RESTAURANT, RECREATIONAL)	100 psf
.....FLOOR FRAMING (RESIDENTIAL AREAS)	40 psf
.....STAIRWAYS, EXITS	100 psf
.....BALCONIES	75 psf
.....PRIVATE GARAGES (PASSENGER VEHICLES ONLY)	40 psf
.....INTERIOR PARTITION WALLS (UNIFORMLY DISTRIBUTED WEIGHT)	15 psf
.....CORRIDORS FIRST FLOOR	100 psf
.....CORRIDORS 2nd 3rdFLOORS	40 psf
.....CORNICES	60 psf

SNOW LOADS & DESIGN DATA:

.....DESIGN SNOW LOAD	42 psf (BALANCED SNOW LOAD)
.....FLAT ROOF SNOW LOAD (Pf) = (0.7*Ce*Ct*Is*Pg)	42 psf
.....SNOW EXPOSURE FACTOR (Ce)	1.0
.....SNOW LOAD IMPORTANCE FACTOR (Is)	1.0
.....ROOF THERMAL FACTOR (Ct)	1.0
.....GROUND SNOW (Pg)	60 psf
.....SLOPED ROOF FACTOR (Cs)	1.0

WIND DESIGN DATA:

.....WIND IMPORTANCE FACTOR (Iw)	1.0
.....RISK CATEGORY II	
.....BASIC WIND SPEED (3-SECOND GUST, ULTIMATE)	115 MPH
.....BASIC WIND SPEED (3-SECOND GUST, NOMINAL)	90 MPH
.....MEAN ROOF HEIGHT	33 FT
.....WIND EXPOSURE CATEGORY	B
.....WIND EXPOSURE CLASSIFICATION	ENCLOSED
.....VELOCITY EXPOSURE COEFFICIENT Kz	0.720
.....TOPOGRAPHIC FACTOR (Kzt)	1.0
.....DESIGN PROCEDURE	METHOD 1 (SIMPLIFIED PROCEDURE)

NET PRESSURE COEFFICIENTS C_{net}		
AREA	C_{+} INTERNAL net PRESSURE	C_{-} INTERNAL net PRESURE
WINDWARD WALL	0,43	0,73
LEEWARD WALL	-0,51	-0,21
SIDEWALL	-0,66	-0,35
PARAPET WINDWARD WALL	1,28	
PARAPET LEEWARD WALL	-0,85	
FLAT ROOF	-1,09	-0,79

DESIGN WIND PRESSURES P_{net}		
AREA	P_{+} INTERNAL net PRESSURE	P_{-} INTERNAL net PRESURE
WINDWARD WALL	10.5 psf	17.8 psf
LEEWARD WALL	-12.4 psf	-5.1 psf
SIDEWALL	-16.1 psf	-8.5 psf
PARAPET WINDWARD WALL	31.2 psf	
PARAPET LEEWARD WALL	-20.7 psf	
FLAT ROOF	-26.6 psf	-19.3 psf

EARTHQUAKE DESIGN DATA:

.....OCCUPANCY CATEGORY	II
.....SEISMIC IMPORTANCE FACTOR (Ie)	1
.....MAPPED SPECTRAL ACCELERATIONS AT SHORT PERIODS (Ss)	0.045 g
.....MAPPED SPECTRAL ACCELERATIONS AT (1) SECOND PERIODS (S1)	0.038 g
.....SITE CLASSIFICATIONS	B
.....SITE COEFFICIENT (Fa)	1.0
.....SITE COEFFICIENT (Fv)	1.0
.....DESIGN SPECTRAL RESPONSE COEFFICIENT AT SHORT PERIODS (Sds)	0.030 g
.....DESIGN SPECTRAL RESPONSE COEFFICIENT AT (1) SECOND PERIODS (Sd1)	0.025 g
.....SEISMIC DESIGN CATEGORY	A
.....BASIC SEISMIC-FORCE-RESISTING SYSTEM	LIGHT FRAME WOOD WALLS WITH STRUCTURAL WOOD SHEAR PANELS
.....ANALYSIS PROCEDURE FOR SEISMIC DESIGN	EQUIVALENT LATERAL FORCE ANALYSIS

SOIL DESIGN VALUES:

.....SOIL UNIT WEIGHT	125 PCF (ASSUMED)
.....LATERAL EARTH PRESSURE	
.....AT-REST (BASEMENT WALLS)	62.5 PSF/FT OF DEPTH (ASSUMED)
.....PASSIVE	340 PSF (ASSUMED)
.....COEFFICIENT OF SLIDING FRICTION	0.30 (ASSUMED)
.....SUBGRADE MODULUS	260 PCI (ASSUMED)
.....ALLOWABLE SOIL BEARING PRESSURE	3000 PSF

REFER TO SOILS REPORT NO. 17002 DATED 2/10/2017 PREPARED BY ITCO ALLIED ENGINEERING CO. FOR DESCRIPTION OF SOIL CONDITIONS, GEOTECHNICAL RECOMMENDATIONS, AND DESIGN VALUES

DEFLECTION LIMITS			
MEMBERS	LIVE	SNOW or WIND	DEAD + LIVE or SNOW
ROOF MEMBERS			
SUPPORTING GYPSUM BOARD CEILINGS	L/360	L/360	L/240
SUPPORTING FLEXIBLE CEILINGS	L/360	L/360	L/240
NOT SUPPORTING CEILING	L/240	L/240	L/180
SUPPORTING RIGID MATERIALS (BRICK, MASONRY, ETC.)	L/600	L/600	L/600
FLOOR MEMBERS			
SUPPORTING RIGID MATERIALS (BRICK, MASONRY, ETC.)	L/600	L/600	L/600
SUPPORTING GYPSUM BOARD CEILINGS	L/540	N/A	L/360
SUPPORTING FLEXIBLE MATERIALS	L/540	N/A	L/360
WOOD TRUSSES	L/480	L/360	L/240
LINTEL/HEADER/BEAM MEMBERS			
SUPPORTING RIGID MATERIALS (BRICK, MASONRY, ETC.)	L/600	L/600	L/600
SUPPORTING FLEXIBLE MATERIALS (EIFS, SIDING, ETC.)	L/360	L/360	L/240
EXTERIOR WALLS			
WITH RIGID FINISHES (BRICK, MASONRY, ETC.)	N/A	L/600	N/A
WITH FLEXIBLE FINISHES (EIFS, SIDING, ETC.)	N/A	L/360	N/A

MATERIAL STRENGTHS

CAST-IN-PLACE CONCRETE:

FOOTINGS
.....MINIMUM COMPRESSIVE STRENGTH AT 28 DAYS f'c = 3,000 PSI
.....MAXIMUM WATER-CEMENTITIOUS RATIO 0.59
.....MAXIMUM AGGREGATE SIZE 1 1/2"
.....SLUMP LIMIT 5" +/-1"
.....AIR CONTENT NO
EXTERIOR PIERS, WALLS, AND COLUMNS
.....MINIMUM COMPRESSIVE STRENGTH AT 28 DAYS f'c = 4,000 PSI
.....MAXIMUM WATER-CEMENTITIOUS RATIO 0.48
.....MAXIMUM AGGREGATE SIZE 3/4"
.....SLUMP LIMIT 4" +/-1"
.....AIR CONTENT YES 4% to 6%
INTERIOR SLABS ON GRADE
.....MINIMUM COMPRESSIVE STRENGTH AT 28 DAYS f'c = 4,000 PSI
.....MAXIMUM WATER-CEMENTITIOUS RATIO 0.48
.....MAXIMUM AGGREGATE SIZE 3/4"
.....SLUMP LIMIT 4" +/-1"
.....AIR CONTENT NO
CONCRETE TOPPING
.....MINIMUM COMPRESSIVE STRENGTH AT 28 DAYS f'c = 4,000 PSI
.....MAXIMUM WATER-CEMENTITIOUS RATIO 0.48
.....MAXIMUM AGGREGATE SIZE 3/4"
.....SLUMP LIMIT 4" +/-1"
.....AIR CONTENT NO
STAIR LANDINGS AND TREADS
.....MINIMUM COMPRESSIVE STRENGTH AT 28 DAYS f'c = 4,000 PSI
.....MAXIMUM WATER-CEMENTITIOUS RATIO 0.48
.....MAXIMUM AGGREGATE SIZE 3/4"
.....SLUMP LIMIT 4" +/-1"
.....AIR CONTENT NO
EXTERIOR SLABS ON GRADE
.....MINIMUM COMPRESSIVE STRENGTH AT 28 DAYS f'c = 4,000 PSI
.....MAXIMUM WATER-CEMENTITIOUS RATIO 0.48
.....MAXIMUM AGGREGATE SIZE 3/4"
.....SLUMP LIMIT 4" +/-1"
.....AIR CONTENT YES 4% to 6%
SLURRY
.....MINIMUM COMPRESSIVE STRENGTH AT 28 DAYS f'c = 1,000 PSI
.....MAXIMUM WATER-CEMENTITIOUS RATIO 0.55
.....MAXIMUM AGGREGATE SIZE 1 1/2"
.....SLUMP LIMIT 6" +/-1"
.....AIR CONTENT NO

STEEL/METAL:

REINFORCING STEEL:
.....ALL ASTM A615, GRADE 60, DEFORMED Fy = 60,000 PSI
.....STEEL WELDED WIRE REINFORCEMENT, FLAT SHEETS Fy = 60,000 PSI

STRUCTURAL STEEL:
.....ROLLED WIDE FLANGE SHAPES, ASTM A992 GRADE 50 Fy = 50,000 PSI
.....CHANNELS, ANGLES, AND S SHAPES, ASTM A36 Fy = 36,000 PSI
.....PLATE AND BAR, ASTM A36 Fy = 36,000 PSI
.....TUBE SHAPES, ASTM A500 GRADE B Fy = 46,000 PSI
.....PIPE ASTM A53, TYPE E or S, GRADE B Fy = 46,000 PSI
.....ALL OTHER ROLLED SHAPES, ASTM A36 Fy = 36,000 PSI

STRUCTURAL BOLTS:
.....HIGH STRENGTH BOLTS, NUTS, & WASHERS ASTM A325
.....ZINC-COATED HIGH STRENGTH BOLTS, NUTS, & WASHERS ASTM A325
.....STAINLESS STEEL BOLTS, NUTS, & WASHERS ASTM F593
.....SHEAR CONNECTORS (GRADES 1015 THRU 1020) ASTM A108
.....THREADED RODS ASTM A36
.....CLEVIS & TURNBUCKLES (GRADE 1035) ASTM A108
.....EYE BOLTS & NUTS (GRADE 1030) ASTM A108
.....ANCHOR BOLTS (GRADE 36) ASTM F1554

WELDED CONNECTIONS:
.....WELDING ELECTRODES E70XX
E80XX FOR
WELDING REINF

MASONRY: f'm = 2,000 PSI

MASONRY MORTAR:
.....TYPE "M" MORTAR BELOW GRADE
.....TYPE "M" or "S" ABOVE GRADE

GROUT BELOW BASE PLATES & BEARING PLATES:
.....NONMETALLIC, SHRINKAGE-RESISTANT ASTM C1107

FOUNDATION AND EARTHWORK:

1. ALL EXTERIOR FOOTINGS MUST BEAR BELOW LOCAL FROST LINE RELATIVE TO ADJACENT FINISH EXTERIOR GRADE.
2. DO NOT PLACE ANY FOOTINGS ON FROZEN SUBGRADE.
3. BACK FILLING SHALL BE DONE SIMULTANEOUSLY ON BOTH SIDES OF FOUNDATION WALLS.
4. DO NOT PLACE BACK FILL AGAINST BASEMENT WALLS UNTIL THE TOP AND BOTTOM OF THE WALL ARE ADEQUATELY BRACED BY THE SLAB ON GRADE AND THE FLOOR FRAMING AT THE TOP OF THE WALL.
5. REMOVE ANY EXISTING CONCRETE 2'-0" BELOW NEW CONCRETE FOOTINGS AND SLABS ON GRADE, UNLESS NOTED OTHERWISE.
6. SHORING/OR UNDERPINNING SHALL BE DESIGNED TO LIMIT HORIZONTAL AND VERTICAL MOVEMENT OF EXISTING CONSTRUCTION TO 1/4" MAXIMUM IN ANY DIRECTION.
7. CENTER PIER AND COLUMN FOOTINGS ON COLUMN CENTERLINES AND WALL FOOTINGS ON WALL CENTERLINES UNLESS SPECIFICALLY NOTED OTHERWISE.
8. ALL BACK FILL WITHIN 3'-0" OF RETAINING WALLS AND BASEMENT WALLS SHALL BE FREE DRAINING GRANULAR MATERIAL APPROVED BY A SOILS ENGINEER AND COMPACTED TO 90% STANDARD PROCTOR.
9. TOP OF FOOTING ELEVATIONS SHOWN ON THESE CONSTRUCTION DOCUMENTS REPRESENT MINIMUM FOOTING DEPTHS FOR FROST PROTECTION AND BEST JUDGMENT OF A SUITABLE BEARING STRATUM. ACTUAL GRADE CONDITIONS AND SUITABLE BEARING STRATUM MUST BE VERIFIED BY THE CONTRACTOR AND A SOILS ENGINEER AT THE TIME OF EXCAVATION.
10. FOOTING EXCAVATIONS MUST EXTEND TO COMPETENT BEARING MATERIAL. CONTRACTOR SHALL HIRE A SOILS ENGINEER TO FIELD VERIFY NET ALLOWABLE SOIL BEARING CAPACITY STATED ON THESE CONSTRUCTION DOCUMENTS AND IN GEOTECHNICAL REPORT FOR THIS PROJECT. IF SUITABLE BEARING STRATUM DOES NOT EXIST AT FOOTING ELEVATIONS STATED ON CONSTRUCTION DOCUMENTS, EXCAVATIONS SHALL BE EXTENDED UNTIL SOIL WITH STATED BEARING CAPACITY IS REACHED. PLACE COMPACTED FILL BELOW FOOTINGS OR EXTEND FOOTINGS DOWN TO SUITABLE BEARING STRATUM. ENGINEERED FILL BELOW SLABS ON GRADE AND FOOTINGS SHALL BE FREE DRAINING GRANULAR MATERIAL COMPACTED TO 95% MODIFIED PROCTOR AND PLACED PER THE SOIL ENGINEERS RECOMMENDATIONS. ALL FIELD CONDITIONS THAT WILL AFFECT DESIGN AS PRESENTED MUST BE COORDINATED WITH STRUCTURAL ENGINEER.
11. REFER TO DESIGN DATA FOR DESCRIPTION OF SOIL CONDITIONS, GEOTECHNICAL RECOMMENDATIONS, AND DESIGN VALUES.

CONTINUITY:

ALL REINFORCING SHALL BE CONTINUOUS UNLESS NOTED OTHERWISE. CONTINUITY AT CORNERS AND INTERSECTIONS SHALL BE ACHIEVED USING CORNER BARS AND CONTACT LAP SPLICES, SEE TYPICAL DETAIL. CONTINUITY AT OTHER LOCATIONS MAY BE ACHIEVED USING CONTACT LAP SPLICES SHOWN ON APPROVED SHOP DRAWINGS. LOCATION OF LAP SPLICES SHALL BE SHOWN ON THE SHOP DRAWINGS, UNLESS NOTED OTHERWISE, THE FOLLOWING LAP SPLICES SHALL BE USED: (ALL LAP SPLICES ARE CLASS B SPLICES)

LOCATION:	#3	#4	#5	#6	#7	#8	#9	#10	#11
3,000 & 3,500 PSI CONCRETE:									
- TOP BARS (*):	21"	19"	35"	46"	71"	93"	118"	149"	184"
- OTHER BARS:	16"	22"(**)	27"	35"	55"	71"	91"	115"	142"
4,000 & 4,500 PSI CONCRETE:									
- TOP BARS (*):	16"	19"	25"	36"	61"	80"	102"	129"	159"
- OTHER BARS:	16"	16"(**)	19"	28"	47"	62"	78"	99"	123"

(*) TOP BARS ARE HORIZONTAL REINFORCING WHERE MORE THAN 12" OF CONCRETE IS CAST IN THE MEMBER BELOW THE REINFORCING.

(**) FOR #4 EPOXY COATED REBAR, USE 27" SPLICE LENGTH AT 3,000 AND 3,500 PSI CONC. AND 19" AT 4,000 AND 4,500 PSI.

MECHANICAL CONNECTIONS MAY BE USED IN LIEU OF LAP SPLICES PROVIDED APPROVAL IS OBTAINED FROM THE ARCHITECT/ENGINEER. CONNECTIONS SHALL DEVELOP IN TENSION 125 PERCENT OF THE SPECIFIED YIELD STRENGTH OF THE BAR. ALL MECHANICAL CONNECTIONS SHALL BE SHOWN ON THE SHOP DRAWINGS AND BE INSTALLED IN ACCORDANCE WITH THE MANUFACTURER'S WRITTEN INSTRUCTIONS AND THE PRODUCT'S ICC-ES REPORT. SUBMIT THE PRODUCT'S ICC-ES REPORT FOR MECHANICAL SPLICE PRODUCTS WITH SHOP DRAWINGS.

CAPITAL GROUP
Developer: W Capital Group
tyler@wcapitalgroupre.com | 608.345.9848

Architect: OpeningDesign
316 W Washington Ave | Suite 675
Madison, WI 53703
ryan@openingdesign.com | 773.425.6456

General Contractor: ROYAL CONSTRUCTION
3653 Greenway Street | Eau Claire, WI 54701
jim@royalbuilt.com | 715-225-6377

Civil Engineer: CEDAR CORPORATION
604 Wilson Avenue | Menomonie, WI 54751
kevin.olum@cedarcorp.com | 715-235-9081

Structural Engineer: XC Structural Engineering
Calle Apolonio Morales, 628036 Madrid,
l.perezfalco@xcengineering.xyz | +34 610 56 26 37

Structural Engineer of Record: Ennovation
4729 Dale-Curtain Dr, McFarland, WI 53558
kfrey@ennovationbuilt.com

Mechanical Engineer: HOVLAND'S HVAC
10954 E. Melby Street | Chippewa Falls, WI 54729
jhansen@hovlands-inc.com | 715.552.5595

Electrical Engineer: PRISM DESIGN ELECTRICAL CONSULTANS INC
E8403 State Rd 85 | Mondovi, WI 54755
bhalgren@prismdesign-electrical.com | 715.797.0602

Plumbing Engineer: TAILORED ENGINEERING
1600 Aspen Commons | Ste 210 | Middleton, WI 53562
bnovak@tailoredeng.com | 608.209.7500

Date	Description
07.08.2019	Footing/Foundation Permit
08.21.2019	Permit

STRUCTURAL NOTES
CANNERY TRAIL RESIDENCES - 1750 N OXFORD AVE. - EAU CLAIRE, WI

S000

10/1/2019 11:46:02 AM

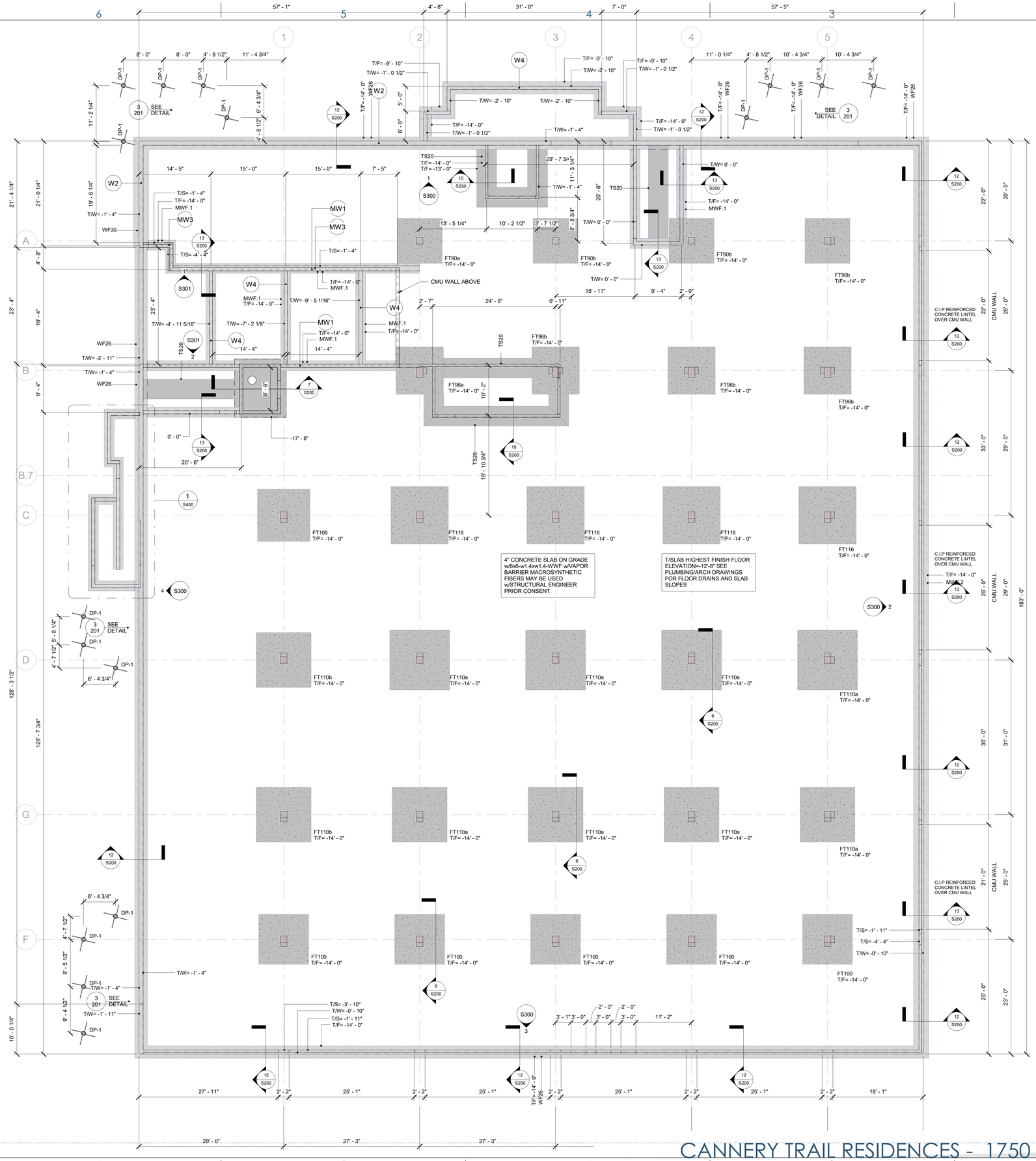

MASONRY WALL REINFORCING SCHEDULE

MARK	WALL THICKNESS	VERTICAL REINFORCEMENT & SPACING	REINFORCEMENT LOCATION IN CELL
MW.1	8"	#5 AT 48" o/c MAX	CENTER
MW.2	8"	#6 AT 16" o/c MAX	INSIDE FACE

MASONRY WALL REINFORCEMENT SCHEDULE NOTES:
1. GROUT CONCRETE MANSORY UNITS SOLID FULL HEIGHT OF BUILDING AT REINFORCEMENT LOCATIONS.
2. UNLESS NOTED OTHERWISE, PROVIDE DOWELS INTO FOOTING TO MATCH VERTICAL REINFORCEMENT.
3. PROVIDE CONCRETE MANSORY UNIT WALL REINFORCING ABOVE AND BELOW ALL MANSORY OPENINGS. EXTEND THE LENGTH OF THE REBARS BY 23" OR 40 BAR DIAMETERS PAST THE EDGE OF THE OPENING.
4. REFER TO STRUCTURAL NOTES SHEET FOR LAPS IN STEEL REINFORCEMENT.
5. PROVIDE STANDARD (W1.7) HORIZONTAL JOINT REINFORCING AT 16" ON CENTER VERTICALLY (8" ON CENTER IN PARAPET WALLS) UNO.
REINFORCING TO BE HOT-DIPPED GALVANIZED IN EXTERIOR WALLS AND MILL-GALVANIZED FOR INTERIOR WALLS.
6. MANSORY FIREWALL CONSTRUCTION ASSUMES MASONRY BLOCKS COMPRISED OF LIMESTONE.

MASONRY WALL FOOTING SCHEDULE

MARK	WIDTH	THICKNESS	LONGITUDINAL
MWF.1	2' - 0"	1' - 0"	(2)#5
MWF.2	3' - 0"	1' - 2"	(3)#5

MASONRY WALL FOOTING SCHEDULE:
1. REFER TO STRUCTURAL NOTES SHEET FOR LAPS IN STEEL REINFORCEMENT.
2. REFER TO FUNDATION PLAN FOR TOP OF FOOTING ELEVATIONS.
3. ALL FOOTIN' EXCAVATIONS SHALL BE INSPECTED AND APPROVED BY THE GEOTECHNICAL ENGINEER PRIOR TO PLACING CONCRETE

THICKENED SLAB SCHEDULE

MARK	DIMENSIONS		REINFORCEMENT	REMARKS
	WIDTH (xCONT)	THICKNESS	LONGITUDINAL	
TS20	2' - 0"	1' - 0"	(2) #5	THICKENED SLAB, REFER TO 11/

THICKENED SLAB SCHEDULE NOTES:
1. REFER TO STRUCTURAL NOTES SHEET FOR LAPS IN STEEL REINFORCEMENT.
2. REFER TO FOUNDATION PLAN FOR TOP OF FOOTING ELEVATIONS.
3. ALL FOOTIN' EXCAVATIONS SHALL BE INSPECTED AND APPROVED BY THE GEOTECHNICAL ENGINEER PRIOR TO PLACING CONCRETE

WALL FOOTING SCHEDULE

MARK	DIMENSIONS		REINFORCEMENT	
	WIDTH	THICKNESS	LONGITUDINAL	TRANSVERSE
WF26	2' - 6"	1' - 2"	(3)-#5	#5's AT 12" BOTTOM FACE
WF30	3' - 0"	1' - 2"	(3)-#5	#5's AT 12" BOTTOM FACE

COLUMN FOOTING SCHEDULE NOTES:
1. REFER TO STRUCTURAL NOTES SHEET FOR MINIMUN COVER REQUERIMENTS.
2. REFER TO FOUNDATION PLAN FOR TOP OF FOOTING ELEVATIONS.
3. ALL FOOTIN' EXCAVATIONS SHALL BE INSPECTED AND APPROVED BY THE GEOTECHNICAL ENGINEER PRIOR TO PLACING CONCRETE
4. ALL LAPS IN STELL REINFORCING SHALL BE CLASS "B" LAP SPLICES UNLESS NOTED OTHERWISE.

COLUMN FOOTING SCHEDULE

MARK	DIMENSIONS			BOTTOM REINFORCING		COLUMNS
	W	L	D	LONG	SHORT	
FT90a	9'-0"	9'-0"	1'-8"	(10)-#7	(10)-#7	A1 A2
FT90b	9'-0"	9'-0"	1'-8"	(10)-#8	(10)-#8	A3 A4 A5
FT96a	9'-6"	9'-6"	1'-8"	(10)-#7	(10)-#7	B2
FT96b	9'-6"	9'-6"	1'-8"	(10)-#8	(10)-#8	B3 B4 B5
FT100	10'-0"	10'-0"	2'-1"	(11)-#8	(11)-#8	F1 F2 F3 F4 F5
FT106	10'-6"	10'-6"	2'-3"	(11)-#8	(11)-#8	C1
FT110a	11'-0"	11'-0"	2'-1"	(12)-#8	(12)-#8	G2 G3 G4 G5
FT110b	11'-0"	11'-0"	2'-3"	(12)-#8	(12)-#8	D1 G1
FT116	11'-6"	11'-6"	2'-1"	(12)-#8	(12)-#8	C2 C3 C4 C5
FT120	12'-0"	12'-0"	2'-3"	(13)-#8	(13)-#8	D2 D3 D4 D5

COLUMN FOOTING SCHEDULE:
1. REFER TO STRUCTURAL NOTES SHEET FOR LAPS IN STEEL REINFORCEMENT.
2. REFER TO FUNDATION PLAN FOR TOP OF FOOTING ELEVATIONS.
3. ALL FOOTIN' EXCAVATIONS SHALL BE INSPECTED AND APPROVED BY THE GEOTECHNICAL ENGINEER PRIOR TO PLACING CONCRETE

CONCRETE WALL REINFORCING SCHEDULE

MARK	TYPE	THICKNESS	REINFORCEMENT		REMARKS
			VERTICAL	HORIZONTAL	
W1	CONCRETE	10"	5#'s AT 18"o.c.	5#'s AT 12"o.c.	inside face
W2	CONCRETE	10"	5#'s AT 12"o.c.	5#'s AT 12"o.c.	inside face
W3	CONCRETE	10"	6#'s AT 12"o.c.	5#'s AT 12"o.c.	inside face
W4	CONCRETE	8"	4#'s AT 12"o.c.	3#'s AT 12"o.c.	centered in wall thickness

CONCRETE WALL REINFORCING SCHEDULE NOTES:
1. REFER TO STRUCTURAL NOTES SHEET FOR LAPS IN STEEL REINFORCEMENT.
2. COORDINATE AND VERIFY ALL DIMENSIONS WITH ARCHITECTURAL DRAWINGS AND EXIST. CONDITIONS

CAPITAL GROUP
Developer: W Capital Group
tyler@wcapitalgroupre.com | 608.345.9848

Architect: OpeningDesign
316 W Washington Ave | Suite 675
Madison, WI 53703
ryan@openingdesign.com | 773.425.6456

General Contractor: ROYAL CONSTRUCTION
3653 Greenway Street | Eau Claire, WI 54701
jim@royalbuilt.com | 715-225-6377

Civil Engineer: CEDAR CORPORATION
604 Wilson Avenue | Menomonie, WI 54751
kevin.olum@cedarcorp.com | 715-235-9081

Structural Engineer: XC Structural Engineering
Calle Apolonio Morales, 628036 Madrid,
l.perezfafo@xcengineering.xyz | +34 610 56 26 37

Structural Engineer of Record: Ennovation
4729 Dale-Curtain Dr, McFarland, WI 53558
kfrey@ennovationbuilt.com

Mechanical Engineer: HOVLAND'S HVAC
10954 E. Melby Street | Chippewa Falls, WI 54729
jhansen@hovlands-inc.com | 715.552.5595

Electrical Engineer: PRISM DESIGN ELECTRICAL CONSULTANS INC
E8403 State Rd 85 | Mondovi, WI 54755
bhalgren@prismdesign-electrical.com | 715.797.0602

Plumbing Engineer: TAILORED ENGINEERING
1600 Aspen Commons | Ste 210 | Middleton, WI 53562
bnovak@tailoredeng.com | 608.209.7500

Date	Description
07.08.2019	Footing/Foundation Permit
08.15.2019	75% CD Set
08.21.2019	Permit
09.25.2019	<Progress>

FOUNDATION PLAN
CANNERY TRAIL RESIDENCES - 1750 N OXFORD AVE. - EAU CLAIRE, WI

S100

10/1/2019 11:46:08 AM

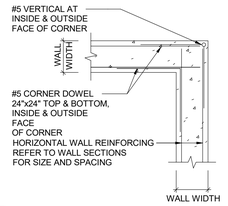

1 S200 CORNER REINF.

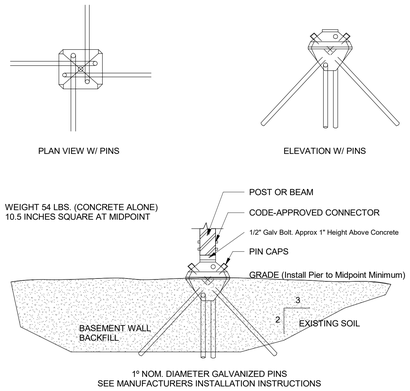

2 S200 DIAMOND PIER DP-50

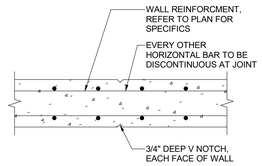

NOTES:
1. TOP AND BOTTOM WALL BARS ARE TO EXTEND THROUGH JOINT.
2. CONTROL JOINT SPACING SHALL BE 25'-0" MAXIMUM.

3 S200 WALL CONTROL JOINT

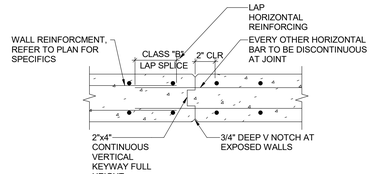

NOTES:
1. TOP AND BOTTOM BARS ARE TO EXTEND THROUGH JOINT.
2. PROVIDE AT END OF EACH WALL POUR.

4 S200 WALL CONSTRUCTION JOINT

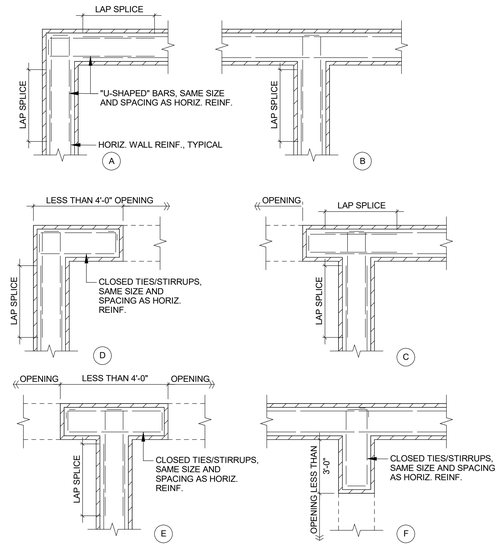

5 S200 MASONRY WALL - REINF.DETAILS

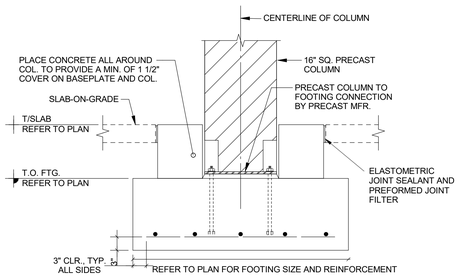

6 S200 PRECAST COLUMN ON CONCRETE FOOTING

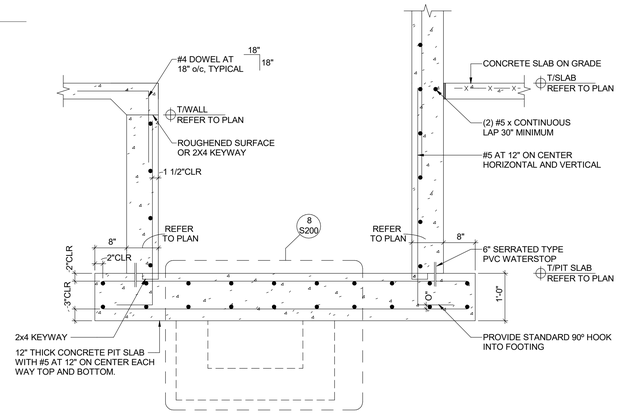

7 S200 ELEVATOR PIT SECTION

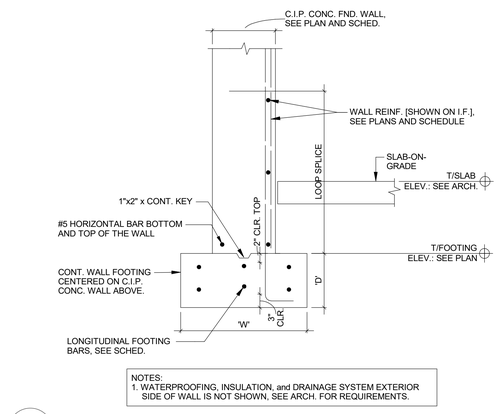

NOTES:
1. WATERPROOFING, INSULATION, and DRAINAGE SYSTEM EXTERIOR SIDE OF WALL IS NOT SHOWN, SEE ARCH. FOR REQUIREMENTS.

12 S200 CONCRETE WALL ON FOOTING

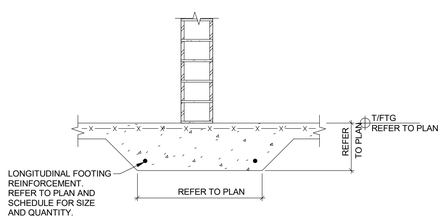

10 S200 INTERIOR STUD WALL ON THICKENED SLAB

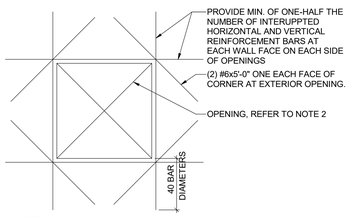

NOTES:
1. ADDED REINFORCEMENT AS SHOWN SHALL BE PROVIDED FOR ALL OPENINGS 12" DIAMETER OR 12" SQUARE AND LARGER IN SIZE, UNLESS DETAILED ELSEWHERE.
2. SPACE ADDED BARS AS CLOSE AS PERMISSIBLE BY CODE FOR THE REQUIRED BAR SIZE.
3. VERIFY SIZE AND LOCATION OF OPENINGS WITH TRADE OR SUBCONTRACTOR WHICH REQUIRES OPENINGS.

9 S200 REINFORCEMENT AROUND CONCRETE WALL OPENING

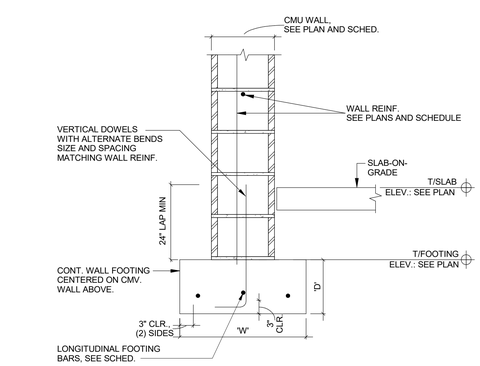

NOTES:
1. WATERPROOFING, INSULATION, and DRAINAGE SYSTEM EXTERIOR SIDE OF WALL IS NOT SHOWN, SEE ARCH. FOR REQUIREMENTS.

13 S200 CMU WALL ON FOOTING

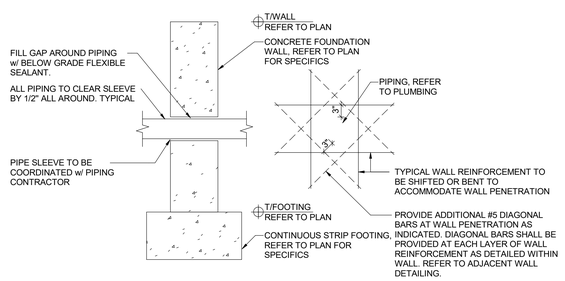

11 S200 PIPE PENETRATION AT FOUNDATION WALL

CAPITAL GROUP
Developer: W Capital Group
tyler@wcapitalgroupre.com | 608.345.9848

Architect: OpeningDesign
316 W Washington Ave | Suite 675
Madison, WI 53703
ryan@openingdesign.com | 773.425.6456

General Contractor: ROYAL CONSTRUCTION
3653 Greenway Street | Eau Claire, WI 54701
jim@royalbuilt.com | 715-225-6377

Civil Engineer: CEDAR CORPORATION
604 Wilson Avenue | Menomonie, WI 54751
kevin.olum@cedarcorp.com | 715-235-9081

Structural Engineer: XC Structural Engineering
Calle Apolonio Morales, 628036 Madrid,
l.perezfatto@xcengineering.xyz | +34 610 56 26 37

Structural Engineer of Record: Ennovation
4729 Dale-Curtain Dr, McFarland, WI 53558
kfrey@ennovationbuilt.com

Mechanical Engineer: HOVLAND'S HVAC
10954 E. Melby Street | Chippewa Falls, WI 54729
jhansen@hovlands-inc.com | 715.552.5595

Electrical Engineer: PRISM DESIGN ELECTRICAL CONSULTANS INC
E8403 State Rd 85 | Mondovi, WI 54755
bhalgren@prismdesign-electrical.com | 715.797.0602

Plumbing Engineer: TAILORED ENGINEERING
1600 Aspen Commons | Ste 210 | Middleton, WI 53562
bnovak@tailoredeng.com | 608.209.7500

Date	Description
07.08.2019	Footing/Foundation Permit
08.15.2019	75% CD Set
08.21.2019	Permit

STRUCTURAL DETAILS

CANNERY TRAIL RESIDENCES - 1750 N OXFORD AVE. - EAU CLAIRE, WI

S200

10/1/2019 11:46:10 AM

JOINT TYPES:

- CONTRACTION OR CONSTRUCTION JOINT
- ISOLATION JOINT

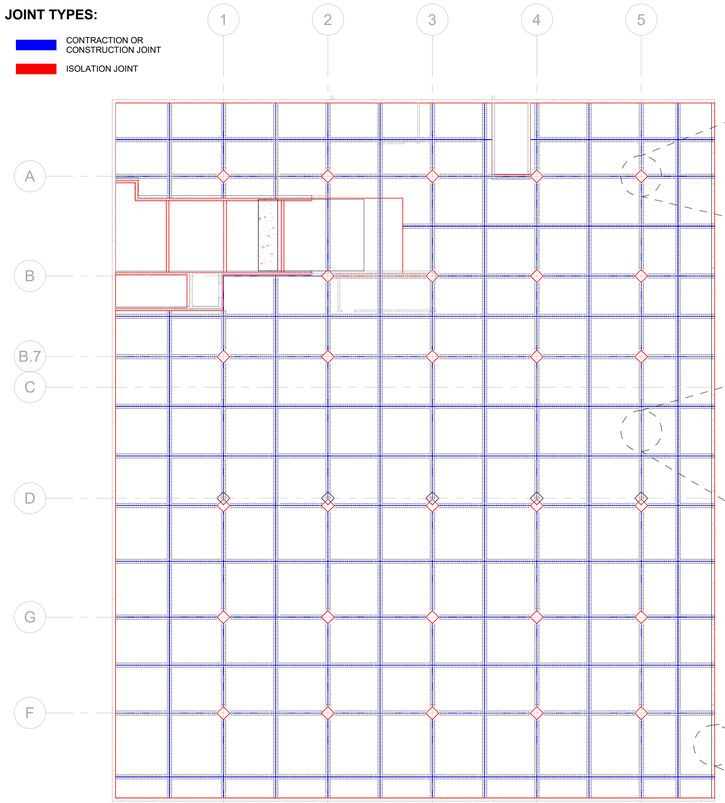

1 S201 SLAB ON GROUND JOINTS

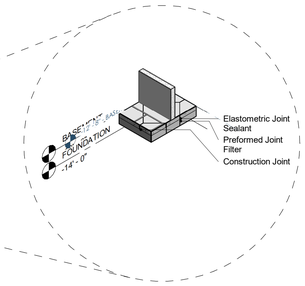

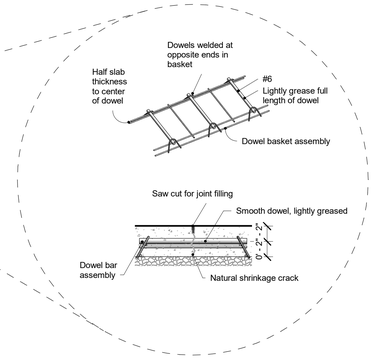

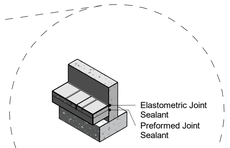

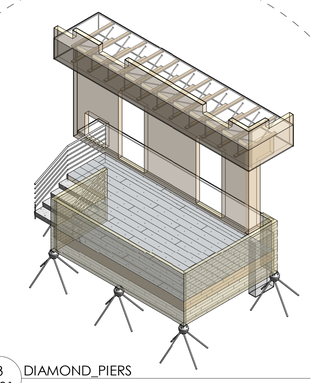

3 S201 DIAMOND_PIERS

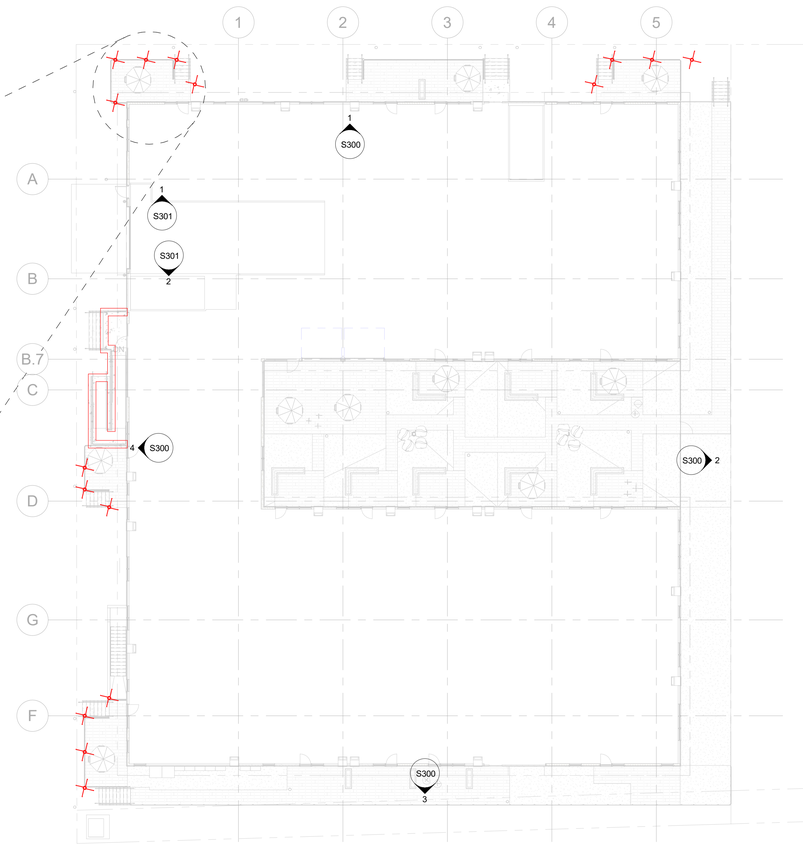

2 S201 DIAMOND PIERS

CAPITAL GROUP
Developer: W Capital Group
tyler@wcapitalgroupre.com | 608.345.9848

Architect: OpeningDesign
316 W Washington Ave | Suite 675
Madison, WI 53703
ryan@openingdesign.com | 773.425.6456

General Contractor: ROYAL CONSTRUCTION
3653 Greenway Street | Eau Claire, WI 54701
jim@royalbuilt.com | 715-225-6377

Civil Engineer: CEDAR CORPORATION
604 Wilson Avenue | Menomonie, WI 54751
kevin.olum@cedarcorp.com | 715-235-9081

Structural Engineer: XC Structural Engineering
Calle Apolonio Morales, 628036 Madrid,
l.peralta@xcengineering.xyz | +34 610 56 26 37

Structural Engineer of Record: Ennovation
4729 Dale-Curtain Dr, McFarland, WI 53558
kfrey@ennovationbuilt.com

Mechanical Engineer: HOVLAND'S HVAC
10954 E. Melby Street | Chippewa Falls, WI 54729
jhansen@hovlands-inc.com | 715.552.5595

Electrical Engineer: PRISM DESIGN ELECTRICAL CONSULTANS INC
E8403 State Rd 85 | Mondovi, WI 54755
bhalgren@prismdesign-electrical.com | 715.797.0602

Plumbing Engineer: TAILORED ENGINEERING
1600 Aspen Commons | Ste 210 | Middleton, WI 53562
bnovak@tailoredeng.com | 608.209.7500

Date	Description
07.08.2019	Footing/Foundation Permit
08.21.2019	Permit
09.25.2019	<Progress>

STRUCTURAL DETAILS rev01

CANNERY TRAIL RESIDENCES - 1750 N OXFORD AVE. - EAU CLAIRE, WI

S201

10/1/2019 11:46:25 AM

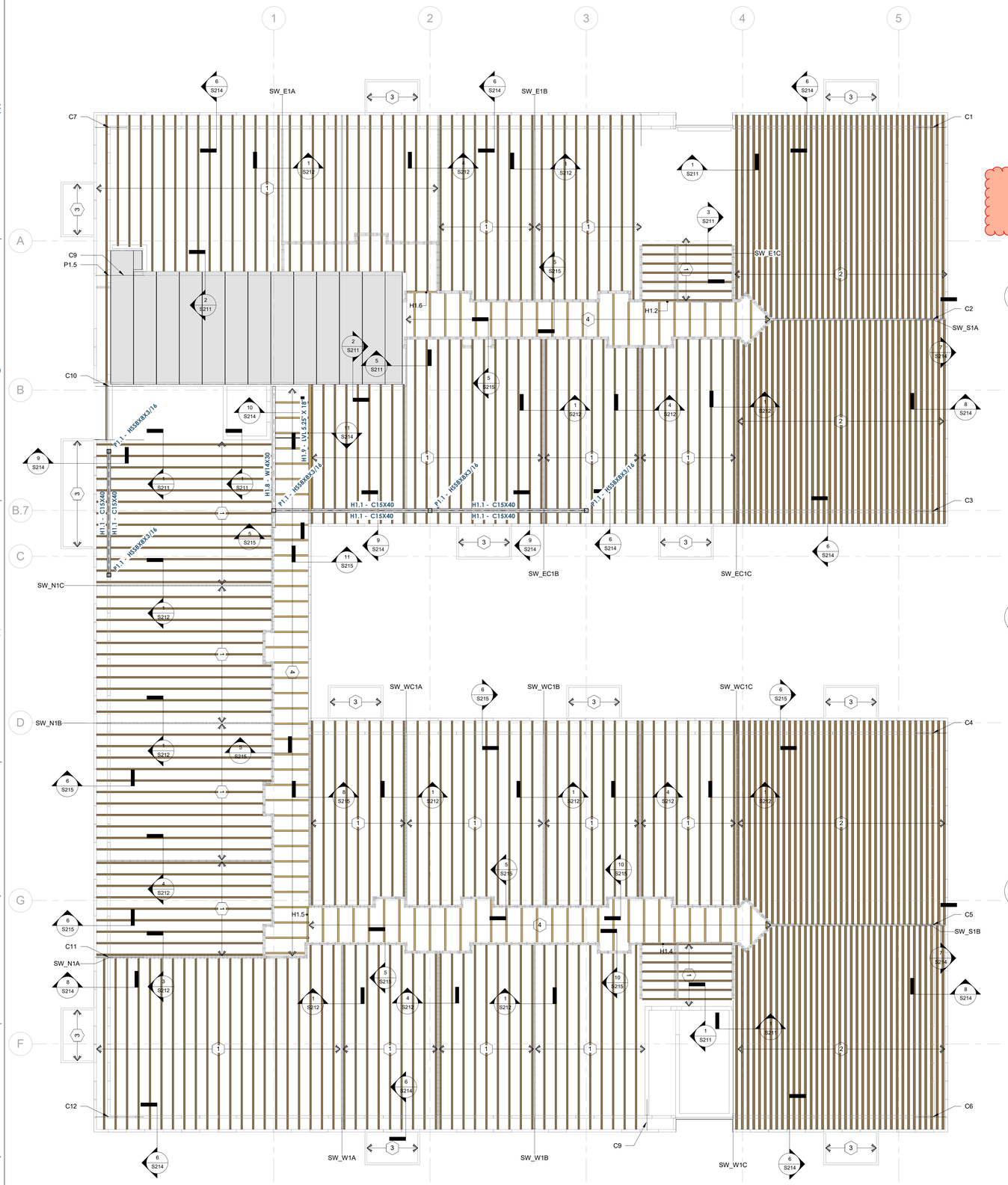

0 S211 FRAMING PLAN - 2ND FLOOR
1/8" = 1'-0"

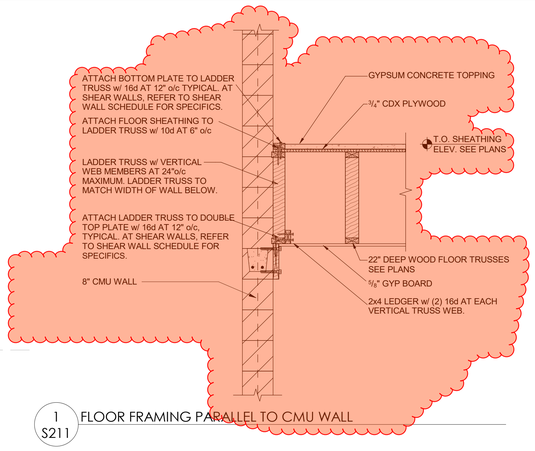

1 S211 FLOOR FRAMING PARALLEL TO CMU WALL

WOOD FLOOR PLAN KEYED NOTES:

1. 22" DEEP PARALLEL CHORD FLOOR TRUSSES AT 24" o/c.
2. 22" DEEP PARALLEL CHORD FLOOR TRUSSES AT 12" o/c.
3. PREFABRICATED SIDE HUNG METAL BALCONY, BY OTHERS
4. 3 1/2"x6" JOISTS AT 32" o/c.

"SEE HEADER/POST SCHEDULE IN S216 SHEET"
"SEE SHEAR WALL SCHEDULE IN S216 SHEET"

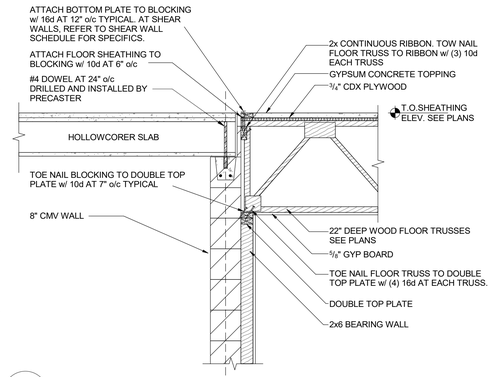

2 S211 FLOOR FRAMING/HOLLOWCORE SLAB

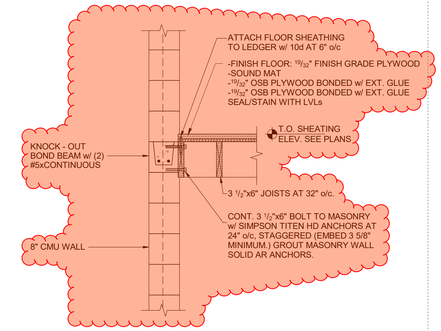

3 S211 CORRIDOR JOISTS PARALLEL TO CMU WALL

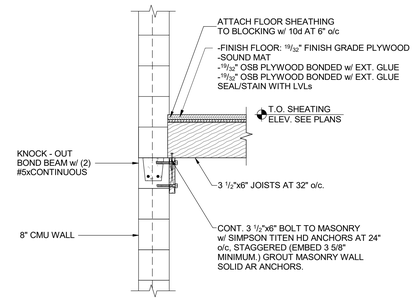

4 S211 CORRIDOR JOISTS BEARING ON CMU WALL

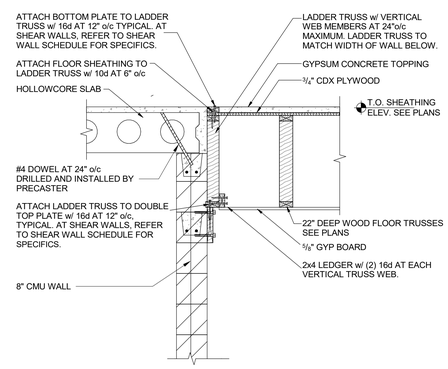

5 S211 FLOOR FRAMING/HOLLOWCORE. SLAB

CAPITAL GROUP
Developer: W Capital Group
tyler@wcapitalgroupre.com | 608.345.9848

Architect: OpeningDesign
316 W Washington Ave | Suite 675
Madison, WI 53703
ryan@openingdesign.com | 773.425.6456

General Contractor: ROYAL CONSTRUCTION
3653 Greenway Street | Eau Claire, WI 54701
jim@royalbuilt.com | 715-225-6377

Civil Engineer: CEDAR CORPORATION
604 Wilson Avenue | Menomonie, WI 54751
kevin.olum@cedarcorp.com | 715-235-9081

Structural Engineer: XC Structural Engineering
Calle Apolonio Morales, 628036 Madrid,
l.perezfarfal@xcengineering.xyz | +34 610 56 26 37

Structural Engineer of Record: Ennovation
4729 Dale-Curtain Dr, McFarland, WI 53558
kfrey@ennovationbuilt.com

Mechanical Engineer: HOVLAND'S HVAC
10954 E. Melby Street | Chippewa Falls, WI 54729
jhansen@hovlands-inc.com | 715.552.5595

Electrical Engineer: PRISM DESIGN ELECTRICAL CONSULTANS INC
E8403 State Rd 85 | Mondovi, WI 54755
bhalgren@prismdesign-electrical.com | 715.797.0602

Plumbing Engineer: TAILORED ENGINEERING
1600 Aspen Commons | Ste 210 | Middleton, WI 53562
bnovak@tailoredeng.com | 608.209.7500

Date	Description
08.15.2019	75% CD Set
08.21.2019	Permit
09.25.2019	<Progress>

FRAMING PLAN - 2ND FLOOR
CANNERY TRAIL RESIDENCES - 1750 N OXFORD AVE. - EAU CLAIRE, WI

S211

10/1/2019 11:46:36 AM

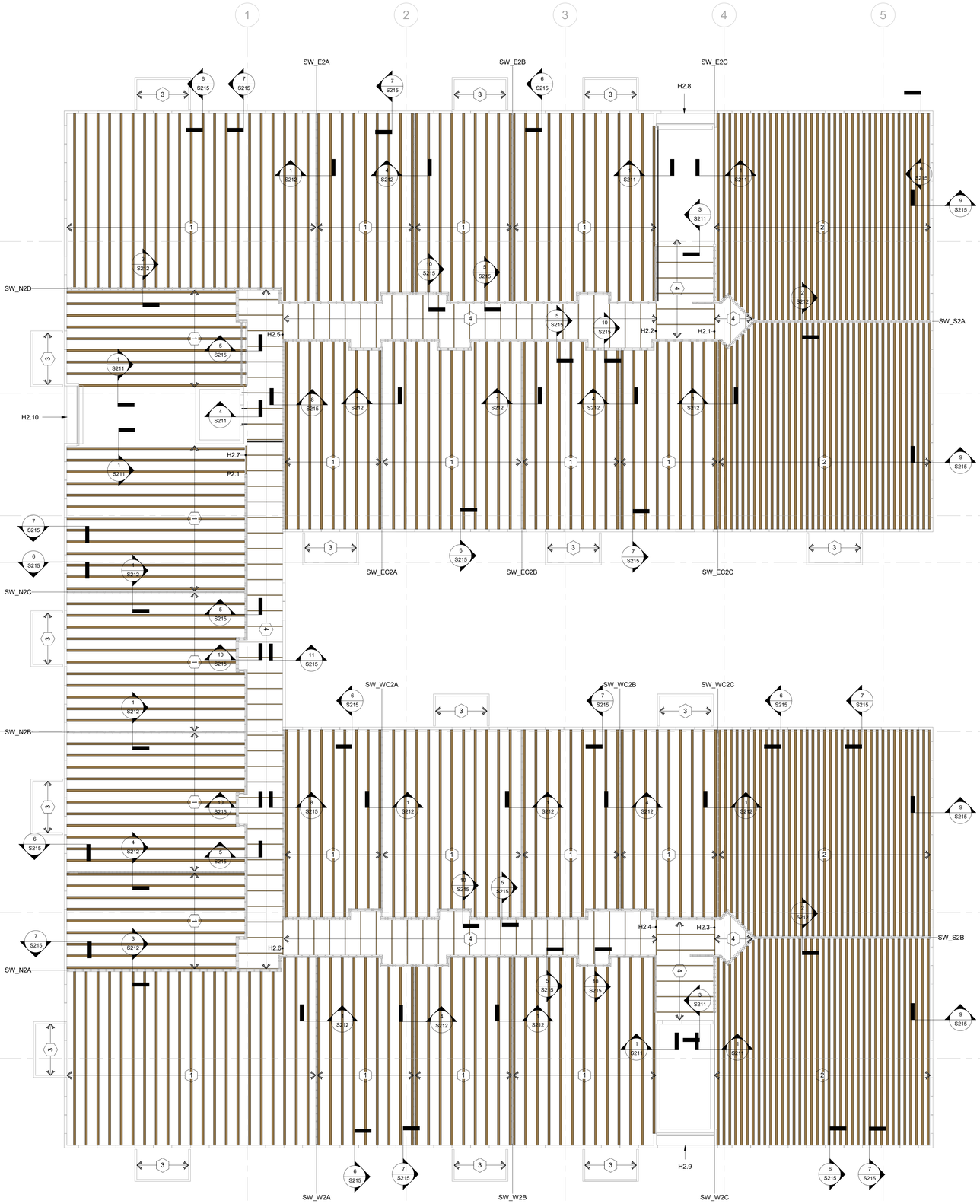

0 S212 FRAMING PLAN - 3RD FLOOR
1/8" = 1'-0"

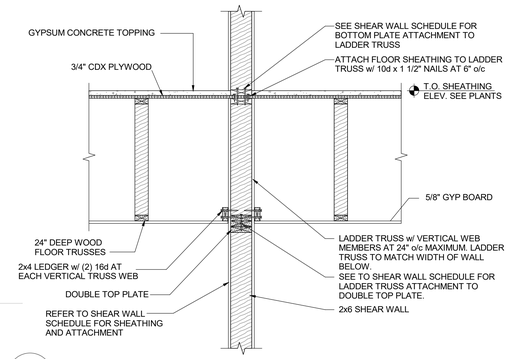

1 S212 FLOOR FRAMING. INTERIOR SHEAR WALL

WOOD FLOOR PLAN KEYED NOTES:

1. 24" DEEP PARALLEL CHORD FLOOR TRUSSES AT 24" o/c.
2. 24" DEEP PARALLEL CHORD FLOOR TRUSSES AT 12" o/c.
3. PREFABRICATED SIDE HUNG METAL BALCONY, BY OTHERS
4. 3 1/2"x6" JOISTS AT 32" o/c.

"SEE HEADER/POST SCHEDULE IN S216 SHEET"
"SEE SHEAR WALL SCHEDULE IN S216 SHEET"

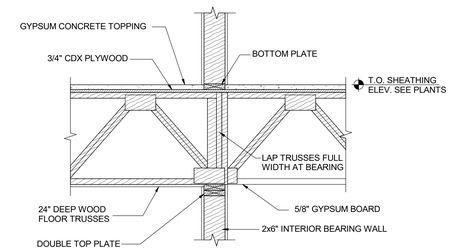

2 S212 FLOOR FRAMING. INTERIOR BEARING WALL

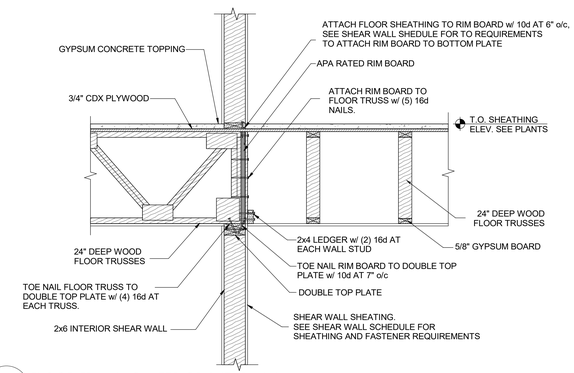

3 S212 FLOOR FRAMING INTERIOR SHEAR WALL

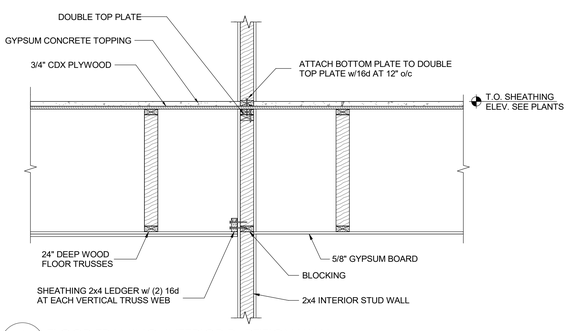

4 S212 FLOOR FRAMING. INTERIOR PARTITION WALL

CAPITAL GROUP
Developer: W Capital Group
tyler@wcapitalgroupre.com | 608.345.9848

Architect: OpeningDesign
316 W Washington Ave | Suite 675
Madison, WI 53703
ryan@openingdesign.com | 773.425.6456

General Contractor: ROYAL CONSTRUCTION
3653 Greenway Street | Eau Claire, WI 54701
jim@royalbuilt.com | 715-225-6377

Civil Engineer: CEDAR CORPORATION
604 Wilson Avenue | Menomonie, WI 54751
kevin.olum@cedarcorp.com | 715-235-9081

Structural Engineer: XC Structural Engineering
Calle Apolonio Morales, 628036 Madrid,
l.perezfafo@xcengineering.xyz | +34 610 56 26 37

Structural Engineer of Record: Ennovation
4729 Dale-Curtain Dr, McFarland, WI 53558
kfrey@ennovationbuilt.com

Mechanical Engineer: HOVLAND'S HVAC
10954 E. Melby Street | Chippewa Falls, WI 54729
jhansen@hovlands-inc.com | 715.552.5595

Electrical Engineer: PRISM DESIGN ELECTRICAL CONSULTANS INC
E8403 State Rd 85 | Mondovi, WI 54755
bhalgren@prismdesign-electrical.com | 715.797.0602

Plumbing Engineer: TAILORED ENGINEERING
1600 Aspen Commons | Ste 210 | Middleton, WI 53562
bnovak@tailoredeng.com | 608.209.7500

Date	Description
08.15.2019	75% CD Set
08.21.2019	Permit
09.25.2019	<Progress>

FRAMING PLAN - 3RD FLOOR
CANNERY TRAIL RESIDENCES - 1750 N OXFORD AVE. - EAU CLAIRE, WI

S212

10/1/2019 1:46:44 AM

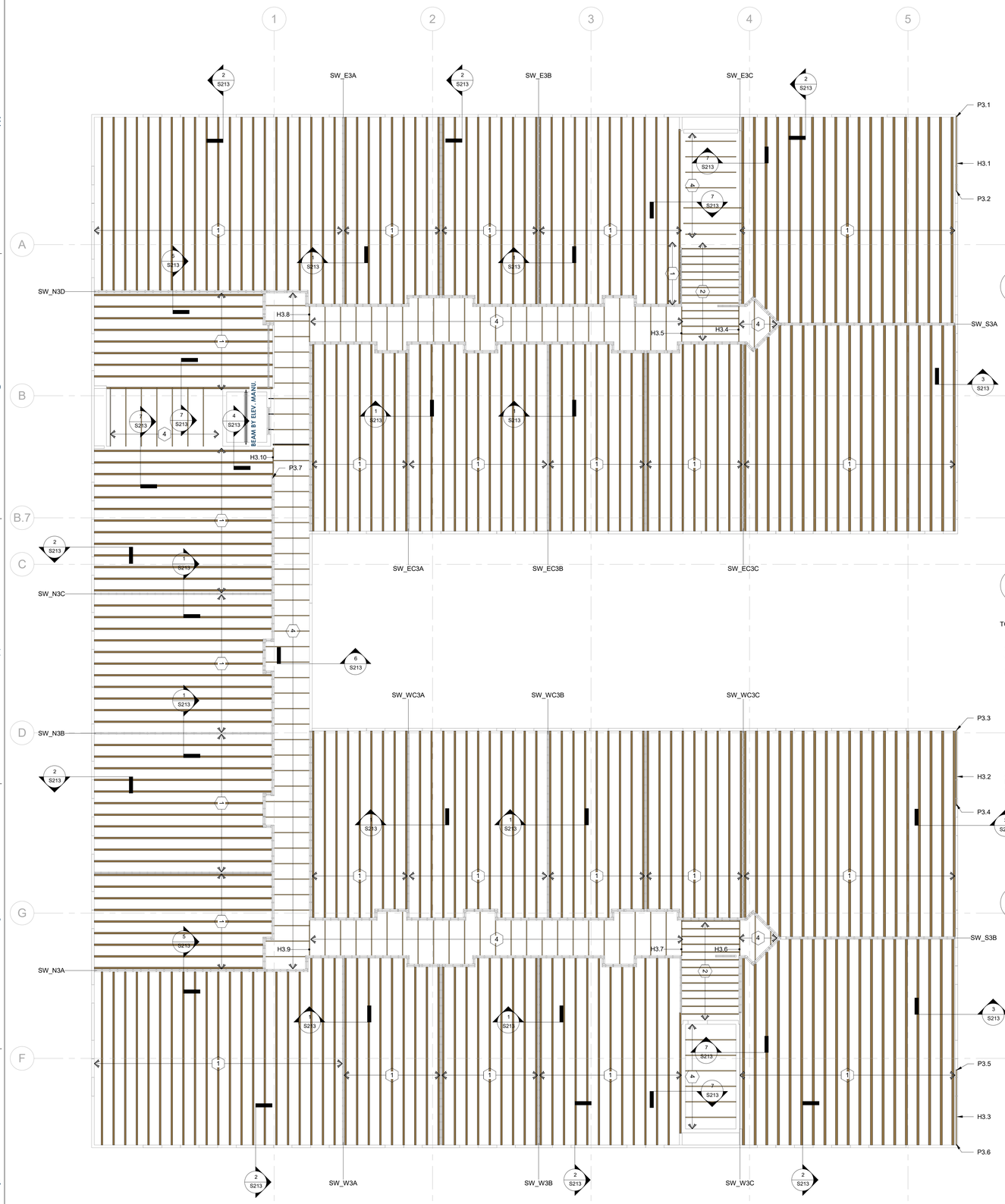

0 S213 FRAMING PLAN - ROOF
1/8" = 1'-0"

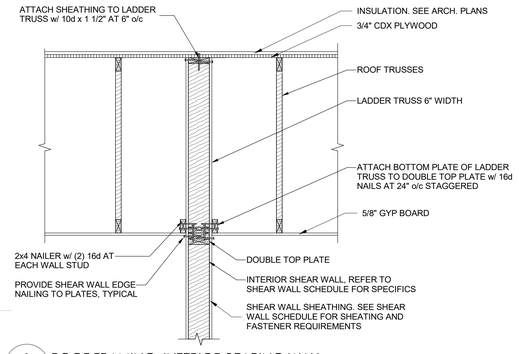

1 S213 ROOF FRAMING. INTERIOR BEARING WALL

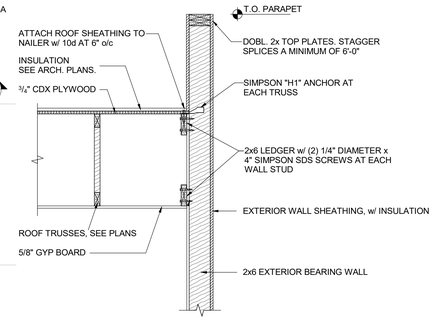

3 S213 ROOF FRAMING. EXTERIOR BEARING WALL

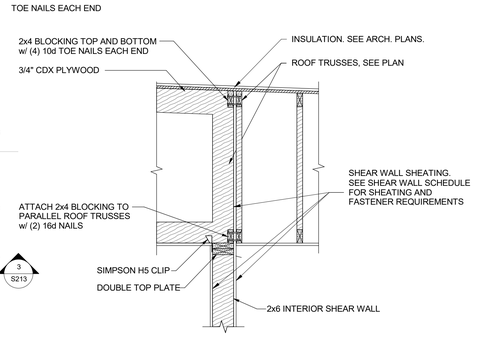

5 S213 ROOF FRAMING. INTERIOR SHEAR WALL

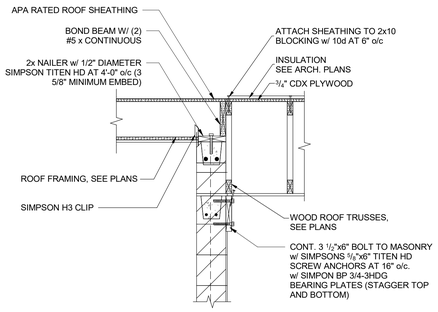

7 S213 ROOF FRAMING. CMU STAIR WALL

WOOD FLOOR PLAN KEYED NOTES:

1. VARIABLE DEPTH PARALLEL CHORD ROOF TRUSSES AT 24" o/c.
2. 3 1 / 2 "x6" JOISTS AT 16" o/c
3. PREFABRICATED SIDE HUNG METAL BALCONY, BY OTHERS
4. 3 1/2"x6" JOISTS AT 32" o/c.

"SEE HEADER/POST SCHEDULE IN S216 SHEET"
"SEE SHEAR WALL SCHEDULE IN S216 SHEET"

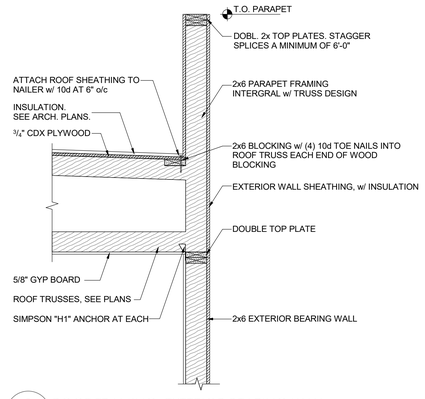

2 S213 ROOF FRAMING. EXTERIOR BEARING WALL

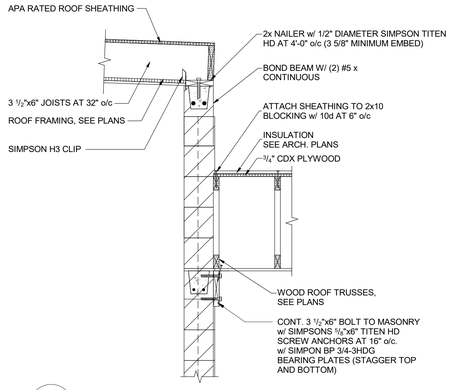

4 S213 ROOF FRAMING. CMU WALL

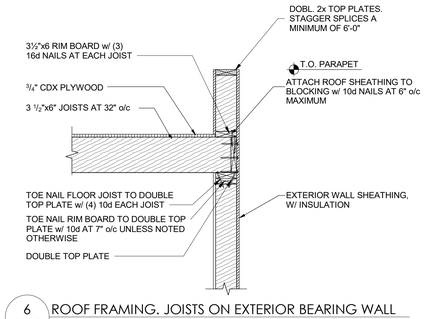

6 S213 ROOF FRAMING. JOISTS ON EXTERIOR BEARING WALL

CAPITAL GROUP
Developer: W Capital Group
tyler@wcapitalgroupre.com | 608.345.9848

Architect: OpeningDesign
316 W Washington Ave | Suite 675
Madison, WI 53703
ryan@openingdesign.com | 773.425.6456

General Contractor: ROYAL CONSTRUCTION
3653 Greenway Street | Eau Claire, WI 54701
jim@royalbuilt.com | 715-225-6377

Civil Engineer: CEDAR CORPORATION
604 Wilson Avenue | Menomonie, WI 54751
kevin.olum@cedarcorp.com | 715-235-9081

Structural Engineer: XC Structural Engineering
Calle Apolonio Morales, 628036 Madrid,
l.perezfalo@xcengineering.xyz | +34 610 56 26 37

Structural Engineer of Record: Ennovation
4729 Dale-Curtain Dr, McFarland, WI 53558
kfrey@ennovationbuilt.com

Mechanical Engineer: HOVLAND'S HVAC
10954 E. Melby Street | Chippewa Falls, WI 54729
jhansen@hovlands-inc.com | 715.552.5595

Electrical Engineer: PRISM DESIGN ELECTRICAL CONSULTANS INC
E8403 State Rd 85 | Mondovi, WI 54755
bhalgren@prismdesign-electrical.com | 715.797.0602

Plumbing Engineer: TAILORED ENGINEERING
1600 Aspen Commons | Ste 210 | Middleton, WI 53562
bnovak@tailoredeng.com | 608.209.7500

Date	Description
08.15.2019	75% CD Set
08.21.2019	Permit
09.25.2019	<Progress>

FRAMING PLAN - ROOF

CANNERY TRAIL RESIDENCES - 1750 N OXFORD AVE. - EAU CLAIRE, WI

S213

10/1/2019 11:46:50 AM

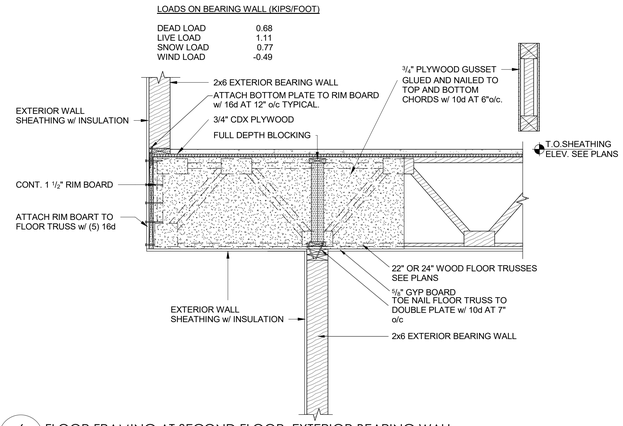

6 S214 FLOOR FRAMING AT SECOND FLOOR. EXTERIOR BEARING WALL

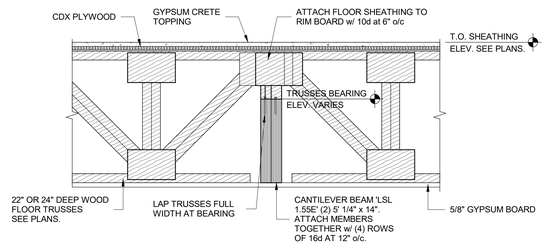

7 S214 CANTILEVER. SECTION

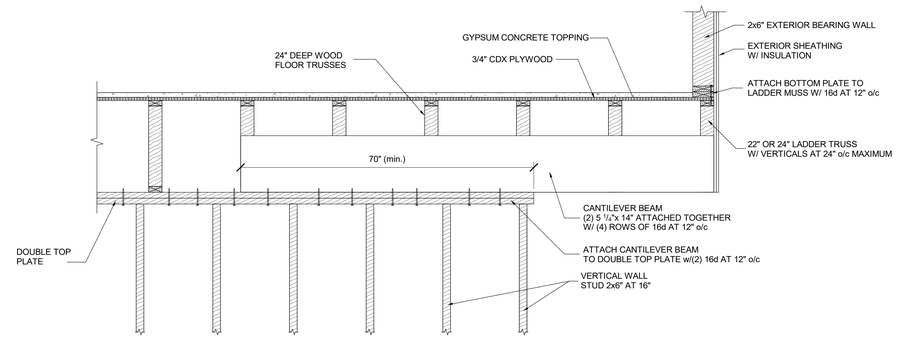

8 S214 CANTILEVER. LATERAL VIEW

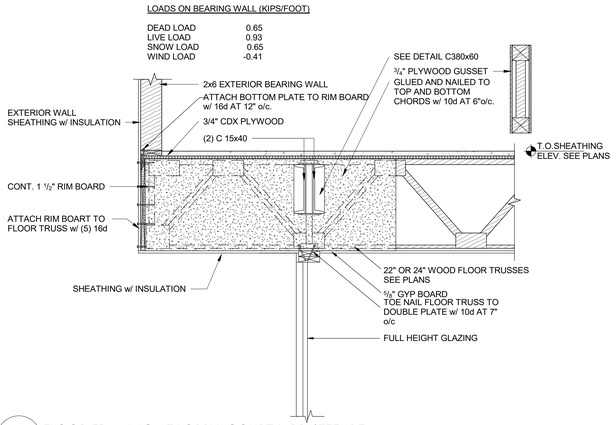

9 S214 FLOOR FRAMING AT LOBBY. COURTYARD STEEL BEAM

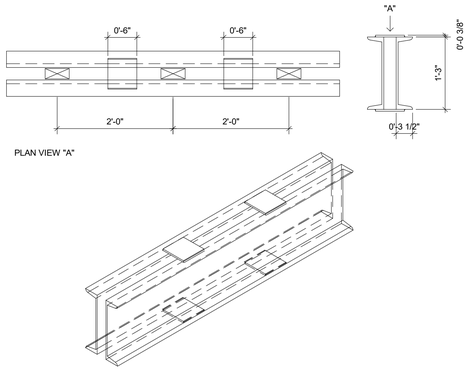

C15x40 DETAIL

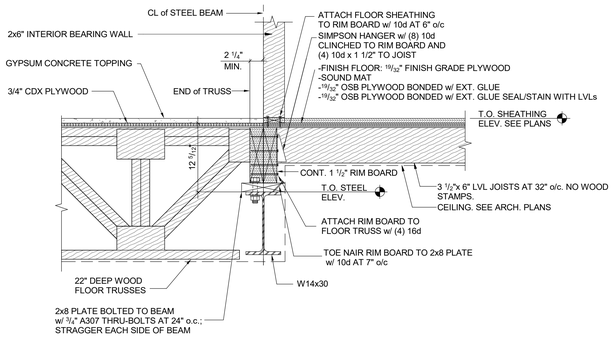

10 S214 FLOOR FRAMING AT LOBBY. CORRIDOR STEEL BEAM

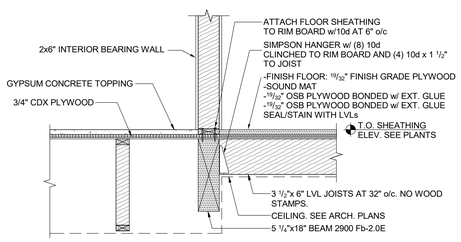

11 S214 FLOOR FRAMING AT LOBBY. INTERIOR BEARING WALL

CAPITAL GROUP
Developer: W Capital Group
tyler@wcapitalgroupre.com | 608.345.9848

Architect: OpeningDesign
316 W Washington Ave | Suite 675
Madison, WI 53703
ryan@openingdesign.com | 773.425.6456

General Contractor: ROYAL CONSTRUCTION
3653 Greenway Street | Eau Claire, WI 54701
jim@royalbuilt.com | 715-225-6377

Civil Engineer: CEDAR CORPORATION
604 Wilson Avenue |Menomonie, WI 54751
kevin.olum@cedarcorp.com | 715-235-9081

Structural Engineer: XC Structural Engineering
Calle Apolonio Morales, 628036 Madrid,
l.perezfalco@xcengineering.xyz | +34 610 56 26 37

Structural Engineer of Record: Ennovation
4729 Dale-Curtain Dr, McFarland, WI 53558
kfrey@ennovationbuilt.com

Mechanical Engineer: HOVLAND'S HVAC
10954 E. Melby Street |Chippewa Falls, WI 54729
jhansen@hovlands-inc.com | 715.552.5595

Electrical Engineer: PRISM DESIGN ELECTRICAL CONSULTANS INC
E8403 State Rd 85 |Mondovi, WI 54755
bhalgren@prismdesign-electrical.com | 715.797.0602

Plumbing Engineer: TAILORED ENGINEERING
1600 Aspen Commons | Ste 210 |Middleton, WI 53562
bnovak@tailoredeng.com | 608.209.7500

Date	Description
08.15.2019	75% CD Set
08.21.2019	Permit
09.25.2019	<Progress>

STRUCTURAL DETAILS

CANNERY TRAIL RESIDENCES - 1750 N OXFORD AVE. - EAU CLAIRE, WI

S214

10/1/2019 11:46:51 AM

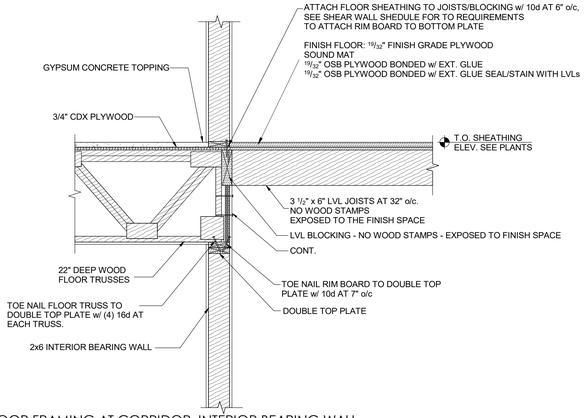

5 S215 FLOOR FRAMING AT CORRIDOR. INTERIOR BEARING WALL

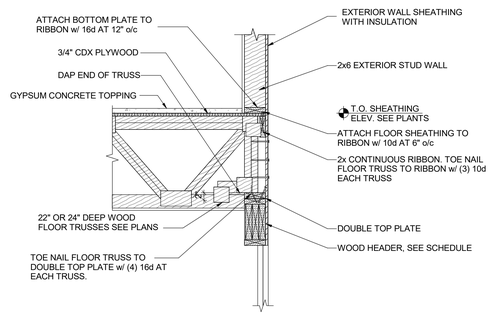

6 S215 FLOOR FRAMING AT EXTERIOR WALL BEARING ON HEADER

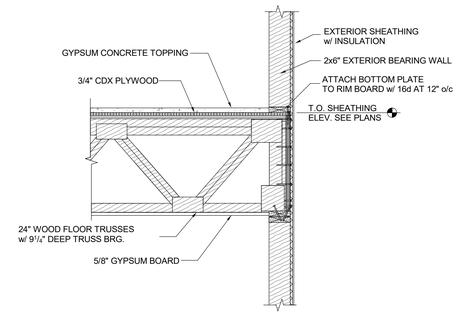

7 S215 FLOOR FRAMING AT EXTERIOR BEARING WALL

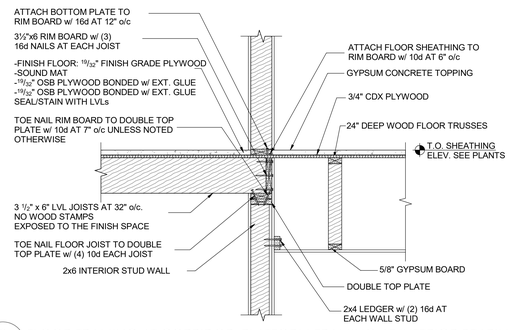

8 S215 FLOOR FRAMING AT CORRIDOR. PLATFORM FRAMING AT INTERIOR BEARING WALL

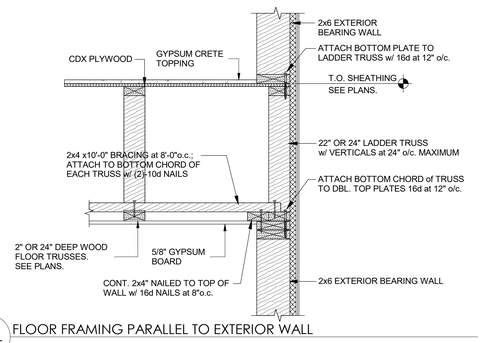

9 S215 FLOOR FRAMING PARALLEL TO EXTERIOR WALL

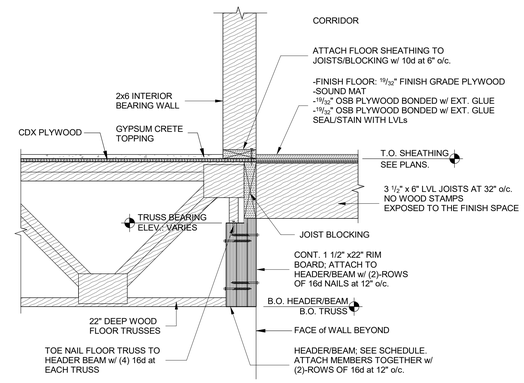

10 S215 FLOOR FRAMING AT CORRIDOR. INTERIOR HEADER

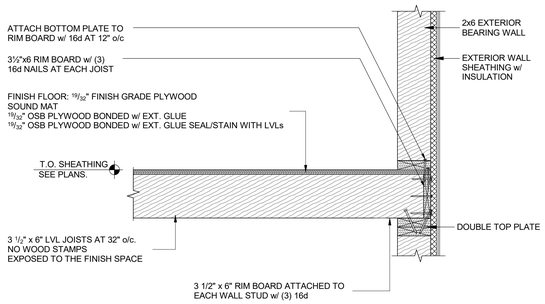

11 S215 FLOOR FRAMING AT CORRIDOR. PLATFORM FRAMING AT EXTERIOR BEARING WALL

CAPITAL GROUP
Developer: W Capital Group
tyler@wcapitalgroupre.com | 608.345.9848

Architect: OpeningDesign
316 W Washington Ave | Suite 675
Madison, WI 53703
ryan@openingdesign.com | 773.425.6456

General Contractor: ROYAL CONSTRUCTION
3653 Greenway Street | Eau Claire, WI 54701
jim@royalbuilt.com | 715-225-6377

Civil Engineer: CEDAR CORPORATION
604 Wilson Avenue |Menomonie, WI 54751
kevin.olum@cedarcorp.com | 715-235-9081

Structural Engineer: XC Structural Engineering
Calle Apolonio Morales, 628036 Madrid,
l.perezfafo@xcengineering.xyz | +34 610 56 26 37

Structural Engineer of Record: Ennovation
4729 Dale-Curtain Dr, McFarland, WI 53558
kfrey@ennovationbuilt.com

Mechanical Engineer: HOVLAND'S HVAC
10954 E. Melby Street |Chippewa Falls, WI 54729
jhansen@hovlands-inc.com | 715.552.5595

Electrical Engineer: PRISM DESIGN ELECTRICAL CONSULTANS INC
E8403 State Rd 85 |Mondovi, WI 54755
bhalgren@prismdesign-electrical.com | 715.797.0602

Plumbing Engineer: TAILORED ENGINEERING
1600 Aspen Commons | Ste 210 |Middleton, WI 53562
bnovak@tailoredeng.com | 608.209.7500

Date	Description
08.15.2019	75% CD Set
08.21.2019	Permit
09.25.2019	<Progress>

STRUCTURAL DETAILS

CANNERY TRAIL RESIDENCES - 1750 N OXFORD AVE. - EAU CLAIRE, WI

S215

10/1/2019 11:46:53 AM

WOOD SHEAR WALL SCHEDULE

Shear wall	Sheathing material	Panel thickness	Blocking	Minimum fastener penetration in framing/panel or blocking	Fastener type and size	Panel edge fastener spacing	Nominal unit shear capacity v/w	Hold-down anchor capacity	Hold down studs	Hold down anchor type	Bottom plate attachment (foundation): Number of bolts (1 in clearwise; 4 inch embedment depth)	Bottom plate attachment (foundation): Bolt spacing	Bottom plate attachment (floor to floor)
ID		(in)		(in)		(in)	(plf)	(kip)					
SW_N3A	Wood structural panels – sheathing	3/8	YES	1-3/8	8d	4	840	2	(1)	Simpson HDU4-SDS2.5	-	-	wood screws 20 (d= 0.32 in) at 25 in. o/c; 30 fasteners in 2 rows.
SW_N3B	Wood structural panels – sheathing	3/8	NO	1-3/8	8d	6	560	-	-	-	-	-	16d (d= 0.268 in) nails at 24 in. o/c; 16 fasteners in 1 row.
SW_N3C	Wood structural panels – sheathing	3/8	NO	1-3/8	8d	6	560	-	-	-	-	-	16d (d= 0.268 in) nails at 21 in. o/c; 35 fasteners in 2 rows.
SW_N3D	Wood structural panels – sheathing	3/8	YES	1-3/8	8d	4	840	2	(1)	Simpson HDU4-SDS2.5	-	-	wood screws 20 (d= 0.32 in) at 25 in. o/c; 30 fasteners in 2 rows.
SW_N2A	Wood structural panels – sheathing	19/32	YES	1-1/2	10d	4	1430	4	(2)	Simpson HDU4-SDS2.5	-	-	wood screws 20 (d= 0.32 in) at 14 in. o/c; 52 fasteners in 2 rows.
SW_N2B	Wood structural panels – sheathing	19/32	YES	1-1/2	10d	6	950	-	-	-	-	-	16d (d= 0.268 in) nails at 13 in. o/c; 28 fasteners in 1 row.
SW_N2C	Wood structural panels – sheathing	19/32	YES	1-1/2	10d	6	950	1	(1)	Simpson HDU4-SDS2.5	-	-	16d (d= 0.268 in) nails at 12 in. o/c; 59 fasteners in 2 rows.
SW_N2D	Wood structural panels – sheathing	19/32	YES	1-1/2	10d	4	1430	4	(2)	Simpson HDU4-SDS2.5	-	-	wood screws 20 (d= 0.32 in) at 14 in. o/c; 52 fasteners in 2 rows.
SW_N1A	Wood structural panels – sheathing	19/32	YES	1-1/2	10d	3	1860	7	(3)	Simpson HDU11-SDS2.5	10	36	SDWS log screw (d= 0.197 in) at 12 in. o/c; 58 fasteners in 2 rows.
SW_N1B	Wood structural panels – sheathing	19/32	YES	1-1/2	10d	6	950	-	-	-	11	36	16d (d= 0.268 in) nails at 19 in. o/c; 39 fasteners in 2 rows.
SW_N1C	Wood structural panels – sheathing	19/32	YES	1-1/2	10d	6	950	3	(1)	Simpson HDU4-SDS2.5	11	36	wood screws 20 (d= 0.32 in) at 19 in. o/c; 40 fasteners in 2 rows.
SW_N1D	Wood structural panels – sheathing	19/32	YES	1-1/2	10d	3	1860	7	(3)	Simpson HDU11-SDS2.5	10	36	SDWS log screw (d= 0.197 in) at 12 in. o/c; 60 fasteners in 2 rows.
SW_S3A	Wood structural panels – sheathing	19/32	YES	1-1/2	10d	6	950	2	(1)	Simpson HDU4-SDS2.5	-	-	wood screws 20 (d= 0.32 in) at 21 in. o/c; 36 fasteners in 2 rows.
SW_S3B	Wood structural panels – sheathing	19/32	YES	1-1/2	10d	6	950	2	(1)	Simpson HDU4-SDS2.5	-	-	wood screws 20 (d= 0.32 in) at 21 in. o/c; 36 fasteners in 2 rows.
SW_S2A	Wood structural panels – sheathing	19/32	YES	1-1/2	10d	3	1860	6	(2)	Simpson HDU11-SDS2.5	-	-	SDWS log screw (d= 0.197 in) at 13 in. o/c; 54 fasteners in 2 rows.
SW_S2B	Wood structural panels – sheathing	19/32	YES	1-1/2	10d	3	1860	6	(2)	Simpson HDU11-SDS2.5	-	-	SDWS log screw (d= 0.197 in) at 13 in. o/c; 54 fasteners in 2 rows.
SW_S1A	Wood structural panels – sheathing	19/32	YES	1-1/2	10d	2	2435	11	(4)	Simpson HD19	10	36	SDWS log screw (d= 0.197 in) at 8 in. o/c; 76 fasteners in 2 rows.
SW_S1B	Wood structural panels – sheathing	19/32	YES	1-1/2	10d	2	2435	11	(4)	Simpson HD19	10	36	SDWS log screw (d= 0.197 in) at 8 in. o/c; 76 fasteners in 2 rows.
SW_E3A	Wood structural panels – sheathing	19/32	YES	1-1/2	10d	4	1430	3	(1)	Simpson HDU4-SDS2.5	-	-	wood screws 20 (d= 0.32 in) at 16 in. o/c; 46 fasteners in 2 rows.
SW_E3B	Wood structural panels – sheathing	3/8	NO	1-3/8	8d	6	560	-	-	-	-	-	16d (d= 0.268 in) nails at 12 in. o/c; 30 fasteners in 1 row.
SW_E3C	Wood structural panels – sheathing	19/32	YES	1-1/2	10d	4	1430	6	(2)	Simpson HDU11-SDS2.5	-	-	SDWS log screw (d= 0.197 in) at 15 in. o/c; 32 fasteners in 2 rows.
SW_E2A	Wood structural panels – sheathing	19/32	YES	1-1/2	10d	3	1860	7	(3)	Simpson HDU11-SDS2.5	-	-	SDWS log screw (d= 0.197 in) at 11 in. o/c; 64 fasteners in 2 rows.
SW_E2B	Wood structural panels – sheathing	3/8	NO	1-3/8	8d	6	560	1	(1)	Simpson HDU4-SDS2.5	-	-	16d (d= 0.268 in) nails at 14 in. o/c; 51 fasteners in 2 rows.
SW_E2C	Wood structural panels – sheathing	19/32	YES	1-1/2	10d	2	2435	11	(4)	Simpson HD19	-	-	SDWS log screw (d= 0.197 in) at 9 in. o/c; 54 fasteners in 2 rows.
SW_E1A	Wood structural panels – sheathing	19/32	YES	1-1/2	10d	2	2435	13	(4)	Simpson HD19	7	36	SDWS log screw (d= 0.197 in) at 7 in. o/c; 64 fasteners in 2 rows.
SW_E1B	Wood structural panels – sheathing	3/8	NO	1-3/8	8d	6	560	-	-	-	11	36	16d (d= 0.268 in) nails at 32 in. o/c; 12 fasteners in 1 row.
SW_E1C	Wood structural panels – sheathing	19/32	YES	1-1/2	10d	2	2435	9	(3)	Simpson HD19	11	36	SDWS log screw (d= 0.197 in) at 10 in. o/c; 72 fasteners in 2 rows.
SW_W3A	Wood structural panels – sheathing	19/32	YES	1-1/2	10d	4	1430	3	(1)	Simpson HDU4-SDS2.5	-	-	wood screws 20 (d= 0.32 in) at 16 in. o/c; 46 fasteners in 2 rows.
SW_W3B	Wood structural panels – sheathing	3/8	NO	1-3/8	8d	6	560	-	-	-	-	-	16d (d= 0.268 in) nails at 12 in. o/c; 30 fasteners in 1 row.
SW_W3C	Wood structural panels – sheathing	19/32	YES	1-1/2	10d	4	1430	6	(2)	Simpson HDU11-SDS2.5	-	-	SDWS log screw (d= 0.197 in) at 15 in. o/c; 32 fasteners in 2 rows.
SW_W2A	Wood structural panels – sheathing	19/32	YES	1-1/2	10d	3	1860	7	(3)	Simpson HDU11-SDS2.5	-	-	SDWS log screw (d= 0.197 in) at 11 in. o/c; 64 fasteners in 2 rows.
SW_W2B	Wood structural panels – sheathing	3/8	NO	1-3/8	8d	6	560	1	(1)	Simpson HDU4-SDS2.5	-	-	16d (d= 0.268 in) nails at 14 in. o/c; 51 fasteners in 2 rows.
SW_W2C	Wood structural panels – sheathing	19/32	YES	1-1/2	10d	2	2435	11	(4)	Simpson HD19	-	-	SDWS log screw (d= 0.197 in) at 9 in. o/c; 54 fasteners in 2 rows.
SW_W1A	Wood structural panels – sheathing	19/32	YES	1-1/2	10d	2	2435	13	(4)	Simpson HD19	9	30	SDWS log screw (d= 0.197 in) at 7 in. o/c; 64 fasteners in 2 rows.
SW_W1B	Wood structural panels – sheathing	3/8	NO	1-3/8	8d	6	560	-	-	-	11	36	16d (d= 0.268 in) nails at 32 in. o/c; 12 fasteners in 1 row.
SW_W1C	Wood structural panels – sheathing	19/32	YES	1-1/2	10d	2	2435	9	(3)	Simpson HD19	11	36	SDWS log screw (d= 0.197 in) at 10 in. o/c; 72 fasteners in 2 rows.
SW_EC3A	Wood structural panels – sheathing	19/32	YES	1-1/2	10d	6	950	0	-	-	-	-	16d (d= 0.268 in) nails at 18 in. o/c; 42 fasteners in 2 rows.
SW_EC3B	Wood structural panels – sheathing	3/8	NO	1-3/8	8d	6	560	-	-	-	-	-	16d (d= 0.268 in) nails at 60 in. o/c; 7 fasteners in 1 row.
SW_EC3C	Wood structural panels – sheathing	19/32	YES	1-1/2	10d	6	950	3	(1)	Simpson HDU4-SDS2.5	-	-	wood screws 20 (d= 0.32 in) at 19 in. o/c; 40 fasteners in 2 rows.
SW_EC2A	Wood structural panels – sheathing	19/32	YES	1-1/2	10d	3	1860	2	(1)	Simpson HDU4-SDS2.5	-	-	wood screws 20 (d= 0.32 in) at 21 in. o/c; 36 fasteners in 2 rows.
SW_EC2B	Wood structural panels – sheathing	3/8	NO	1-3/8	8d	6	560	-	-	-	-	-	16d (d= 0.268 in) nails at 32 in. o/c; 12 fasteners in 1 row.
SW_EC2C	Wood structural panels – sheathing	19/32	YES	1-1/2	10d	3	1860	6	(2)	Simpson HDU11-SDS2.5	-	-	SDWS log screw (d= 0.197 in) at 12 in. o/c; 58 fasteners in 2 rows.
SW_EC1A	Wood structural panels – sheathing	19/32	YES	1-1/2	10d	2	2435	11	(4)	Simpson HD19	6	36	SDWS log screw (d= 0.197 in) at 9 in. o/c; 42 fasteners in 2 rows.
SW_EC1B	Wood structural panels – sheathing	3/8	NO	1-3/8	8d	6	560	-	-	-	11	36	16d (d= 0.268 in) nails at 22 in. o/c; 17 fasteners in 1 row.
SW_EC1C	Wood structural panels – sheathing	19/32	YES	1-1/2	10d	2	2435	11	(4)	Simpson HD19	11	36	SDWS log screw (d= 0.197 in) at 9 in. o/c; 82 fasteners in 2 rows.
SW_WC3A	Wood structural panels – sheathing	19/32	YES	1-1/2	10d	6	950	0	-	-	-	-	16d (d= 0.268 in) nails at 18 in. o/c; 42 fasteners in 2 rows.
SW_WC3B	Wood structural panels – sheathing	3/8	NO	1-3/8	8d	0	560	-	-	-	-	-	16d (d= 0.268 in) nails at 60 in. o/c; 7 fasteners in 1 row.
SW_WC3C	Wood structural panels – sheathing	19/32	YES	1-1/2	10d	6	950	3	(1)	Simpson HDU4-SDS2.5	-	-	wood screws 20 (d= 0.32 in) at 19 in. o/c; 40 fasteners in 2 rows.
SW_WC2A	Wood structural panels – sheathing	19/32	YES	1-1/2	10d	3	1860	2	(1)	Simpson HDU4-SDS2.5	-	-	wood screws 20 (d= 0.32 in) at 21 in. o/c; 36 fasteners in 2 rows.
SW_WC2B	Wood structural panels – sheathing	3/8	NO	1-3/8	8d	6	560	-	-	-	-	-	16d (d= 0.268 in) nails at 32 in. o/c; 12 fasteners in 1 row.
SW_WC2C	Wood structural panels – sheathing	19/32	YES	1-1/2	10d	3	1860	6	(2)	Simpson HDU11-SDS2.5	-	-	SDWS log screw (d= 0.197 in) at 12 in. o/c; 58 fasteners in 2 rows.
SW_WC1A	Wood structural panels – sheathing	19/32	YES	1-1/2	10d	2	2435	11	(4)	Simpson HD19	6	36	SDWS log screw (d= 0.197 in) at 9 in. o/c; 42 fasteners in 2 rows.
SW_WC1B	Wood structural panels – sheathing	3/8	NO	1-3/8	8d	6	560	-	-	-	11	36	16d (d= 0.268 in) nails at 22 in. o/c; 17 fasteners in 1 row.
SW_WC1C	Wood structural panels – sheathing	19/32	YES	1-1/2	10d	2	2435	11	(4)	Simpson HD19	11	36	SDWS log screw (d= 0.197 in) at 9 in. o/c; 82 fasteners in 2 rows.

WOOD FLOOR PLAN NOTES:

1. TYPICAL FLOOR CONSTRUCTION: 1" GYPSUM CONCRETE TOPPING (120 PCF MAXIMUM DENSITY) ON 3/4" TONGUE & GROOVE APA RATED WOOD FLOOR
2. SHEATHING (PLYWOOD OR OSB), GLUE & SCREW FLOOR SHEATHING TO WOOD FLOOR STRUCTURE. SHEATHING TO BE ATTACHED TO FLOOR MEMBERS w/ SIMPSON STRONG-TIE STRONG-DRIVE WSNTL FASTENERS ON A 6"/6" o/c PATTERN (EDGE/FIELD).
3. TYPICAL STAIR LANDING CONSTRUCTION: 3/4" TONGUE & GROOVE APA RATED WOOD FLOOR SHEATHING (PLYWOOD OR OSB). GLUE & SCREW FLOOR SHEATHING TO WOOD FLOOR STRUCTURE. SHEATHING TO BE ATTACHED TO FLOOR MEMBERS w/ SIMPSON STRONG-TIE STRONG-DRIVE WSNTL FASTENERS ON A 6"/6" o/c PATTERN (EDGE/FIELD).
4. REFER TO ARCHITECTURAL DRAWINGS FOR STAIR FRAMING AND CONFIGURATION.
5. "HPX" DENOTES A WOOD HEADER/POST CONSTRUCTION. REFER TO WOOD HEADER/POST SCHEDULE FOR HEADER & POST DESIGNATION.
6. "WPX" DENOTES A WOOD POST. REFER TO WOOD HEADER/POST SCHEDULE FOR WOOD POST DESIGNATION ONLY.
7. ALL EXTERIOR WOOD STUD WALLS SHALL HAVE (1) LAYER OF 1/2" APA RATED SHEATHING (PLYWOOD OR OSB) ON THE EXTERIOR WALL FACE. REFER TO STANDARD DETAILS FOR TYPICAL BEARING WALL CONSTRUCTION AND SHEATHING ATTACHMENT. IF WALL IS NOT SPECIFICALLY DESIGNATED AS A SHEAR WALL, ATTACH SHEATHING TO WALL STUDS w/ 10d COMMON NAILS ON 6"/12" PATTERN (EDGES/FIELD). NAILS TO HAVE A MINIMUM PENETRATION INTO FRAMING MEMBER OF 1-1/2".
8. REFER TO TYPICAL WOOD WALL DETAILS FOR FRAMING AROUND AN OPENING THROUGH A WOOD STUD BEARING WALL.
9. REFER TO EXTERIOR MISCELLANEOUS VENEER LINTEL SCHEDULE FOR ALL OPENINGS IN EXTERIOR VENEER.
10. ALL WOOD POSTS SHALL LINE UP FLOOR TO FLOOR DOWN TO THE TOP OF CONCRETE FOUNDATION WALL OR TOP OF PRECAST PLANK LEVEL. PROVIDE SOLID BLOCKING OF SAME SIZE AS POST IN TRUSS SPACES.
11. AT INTERIOR BEARING WALLS WHERE FLOOR TRUSSES BEAR ON WALL FROM EITHER SIDE, LAP TRUSSES AND BEAR EACH TRUSS FULL WIDTH OF WALL, TYPICAL.
12. PROVIDE 2x6 STRONGBACK BRIDGING FULL LENGTH OF BUILDING. NAIL TO VERTICAL TRUSS WEB w/ (3) 16d NAILS. PROVIDE BRIDGING EQUALLY SPACED ALONG TRUSS SPAN AS REQUIRED BY DESIGN.
13. AT EXTERIOR DECKS, PROVIDE COMPOSITE OR PRESSURE TREATED 5/4" WOOD DECKING.
14. ALL WOOD HEADERS SHOWN IN STUD WALLS ARE DROPPED HEADERS AND SHALL BE PLACED AT WALL OPENING HT UNLESS NOTED OTHERWISE. REFER TO ARCH DRAWINGS FOR OPENING HEIGHTS. ALL OTHER HEADERS SHALL BE FLUSH w/ BOTTOM OF FLOOR FRAMING, TYPICAL.
15. ALL VERTICAL MASONRY WALL REINFORCEMENT SHALL RUN CONTINUOUS THROUGH BOND BEAMS AND EXTEND FULL HEIGHT OF THE WALL. GROUT CORES SOLID AT ALL VERTICAL REINFORCING.
16. "MW-X" INDICATES MASONRY WALL REINFORCEMENT TYPE. REFER TO SCHEDULE FOR SIZE & SPACING.
17. GROUT MASONRY CORES SOLID AT ALL MECHANICAL ANCHOR LOCATIONS, TYPICAL.
18. (XXX'-XX") INDICATES THE TOP OF STEEL BEAM ELEVATION.

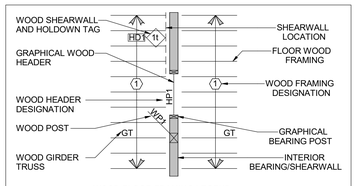

WOOD FLOOR FRAMING LEGEND

WOOD FRAMING

LAMINATED STRAND LUMBER (LSL)

$E = 1.55 \times 10^6$ psi

F_b= 2360 psi

F_v= 410 psi

$F_{c\perp}$= 875 psi (perpendicular to grain)

LAMINATED VENEER LUMBER (LVL)

$E = 2.0 \times 10^6$ psi

F_b= 2900 psi

F_v= 285 psi

$F_{c\perp}$= 750 psi (perpendicular to grain)

DIMENSIONAL LUMBER

WALL STUDS: Hem-Fir Stud or better

WALL PLATES: Hem-Fir No 1 or better

POSTS/COLUMNS: SPRUCE-PINE-FIR No. 2 or better

FLOOR SHEATHING

WOOD STRUCTURAL PANEL

F_sS= 444 lb-in/ft of width

F_s = 215 lb/ft of width

WOOD FRAMING HEADER/POST SCHEDULE

MARK	MATERIAL	WIDTH	DEPTH	BEARING	REMARKS
		(in)	(in)		
Headers					
H3.1, H3.2, H3.3	LVL	1.75	14	P3.1 to P3.6	Third floor enclosed balconies. South facade.
H3.4 to H3.9	LVL	3.50	7.25	2x6 stud	Bearing stud width will match wall studs width. Joists attached with heavy concealed joist ties
H3.10	LVL	3.50	14	P3.7/CMU wall	Notched in CMU wall
H2.1 to H2.6	LVL	3.50	7.25	2x6 stud	Bearing stud width will match wall studs width. Joists attached with heavy concealed joist ties
H2.7	LVL	3.50	14	P2.1/CMU wall	Notched in CMU wall
H2.8 to H2.10	LVL	3.50	18	Adjacent trusses	
H1.1	ASTM A992 steel	(2) C15x50	15	P1.4, P1.5	
H1.2 to H1.6	LVL	3.5000	7.25	2x6 stud	Bearing stud width will match wall studs width. Joists attached with heavy concealed joist ties
H1.8	ASTM A992 steel	W14x30	14	P1.3, CMU wall	
H1.9	LVL	5.25	18	H17, bearing wall	
Facade headers (span < 3.5 feet)	LSL	3.50	7.25	"1 Jack stud(s) and 2 King studs on each side of the opening."	Applicable on any floor
First floor facade headers (3.5 < span < 7 feet)	LSL	3.50	14	"2 Jack stud(s) and 4 King studs on each side of the opening."	
Second floor facade headers (3.5 < span < 7 feet)	LSL	3.50	11.875	"2 Jack stud(s) and 4 King studs on each side of the opening."	
Third floor facade headers (3.5 < span < 7 feet)	LSL	1.75	11.875	"2 Jack stud(s) and 2 King studs on each side of the opening."	
First floor facade headers (3.5 < span < 10 feet)	LSL	5.25	16	"2 Jack stud(s) and 6 King studs on each side of the opening."	
Second floor facade headers (3.5 < span < 10 feet)	LSL	3.50	18	"2 Jack stud(s) and 6 King studs on each side of the opening."	
Third floor facade headers (3.5 < span < 10 feet)	LSL	1.75	18	"2 Jack stud(s) and 3 King studs on each side of the opening."	
Door headers (span < 4.0 feet)	LSL	5.25	14	"1 Jack stud(s) and 3 King studs on each side of the opening."	Applicable on any floor
Cantilevers					
C2,C5	LVL	2x5.25	14	SW_S1A and SW_S1B shear walls	
C1, C3, C4, C6	LVL	5.25	14	facade bearing walls	
C7, C8	LVL	5.25	14	facade bearing walls	
C9	LVL	5.25	18	SW_N2D shear wall	At shear wall bottom
C10	LVL	3.50	18	CMU wall	Bolted to masonry
C11	LVL	5.25	14	SW_N1A shear wall	
Posts					
P3.1 to p3.6	saw lumber	6	6		Third floor enclosed balconies. South facade.
P3.7	saw lumber	4	6		
P2.1	saw lumber	4	6		
P1.1	A500 Rect. HSS Grade B	HSS8x8x3/16			

BEARING WALL SCHEDULE

		Stud dimensions	Spacing (in)	Top plates	Bottom plate	Truss spacing	Remarks
		(in)	(in)			(in)	
Facade	1st floor	2x8	19.2	(2) 2x8	2x8	12/24	
	2nd floor	2x8	19.2	(2) 2x8	2x8	12/24	
	3rd floor	2x8	19.2	(2) 2x8	2x8	24	
Interior	1st floor	2x6	12	(2) 2x6	2x6	12/24	
	2nd floor	2x6	24	(3) 2x6	2x6	12/24	
	3rd floor	2x6	24	(3) 2x6	2x6	24	

CAPITAL GROUP
Developer: W Capital Group
tyler@wcapitalgroupre.com | 608.345.9848

Architect: OpeningDesign
316 W Washington Ave | Suite 675
Madison, WI 53703
ryan@openingdesign.com | 773.425.6456

ROYAL CONSTRUCTION
General Contractor: ROYAL CONSTRUCTION
3653 Greenway Street | Eau Claire, WI 54701
jim@royalbuilt.com | 715-225-6377

Cedar corporation
Civil Engineer: CEDAR CORPORATION
604 Wilson Avenue | Menomonie, WI 54751
kevin.olum@cedarcorp.com | 715-235-9081

XC
Structural Engineer: XC Structural Engineering
Calle Apolonio Morales, 628036 Madrid,
l.perezfafo@xcengineering.xyz | +34 610 56 26 37

Ennovation Engineering Services Incorporated
Structural Engineer of Record: Ennovation
4729 Dale-Curtain Dr, McFarland, WI 53558
kfrey@ennovationbuilt.com

Hovland's Heating | Ventilation | Air Conditioning Comfort for a lifetime
Mechanical Engineer: HOVLAND'S HVAC
10954 E. Melby Street | Chippewa Falls, WI 54729
jhansen@hovlands-inc.com | 715.552.5595

PRISM DESIGN ELECTRICAL CONSULTANTS INC.
Electrical Engineer: PRISM DESIGN ELECTRICAL CONSULTANS INC
E8403 State Rd 85 | Mondovi, WI 54755
bhalgren@prismdesign-electrical.com | 715.797.0602

TAILORED ENGINEERING
Plumbing Engineer: TAILORED ENGINEERING
1600 Aspen Commons | Ste 210 | Middleton, WI 53562
bnovak@tailoredeng.com | 608.209.7500

Date	Description
08.15.2019	75% CD Set
08.21.2019	Permit
09.25.2019	<Progress>

STRUCTURAL NOTES

CANNERY TRAIL RESIDENCES - 1750 N OXFORD AVE. - EAU CLAIRE, WI

S216

10/1/2019 11:46:58 AM

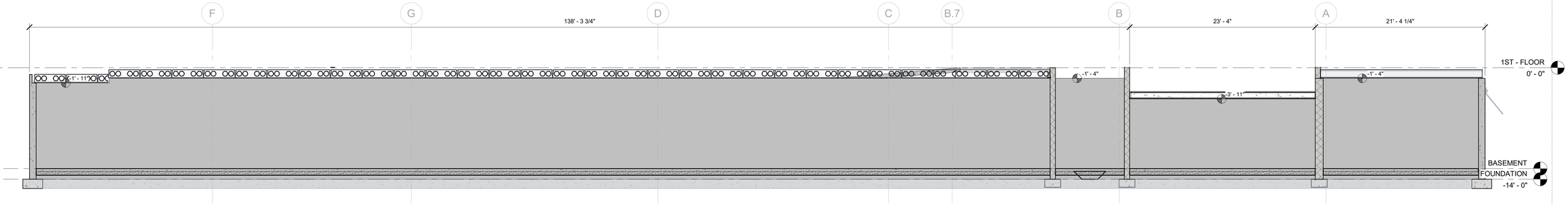

4 S300 ELEVATION - NORTH FOUNDATION WALL

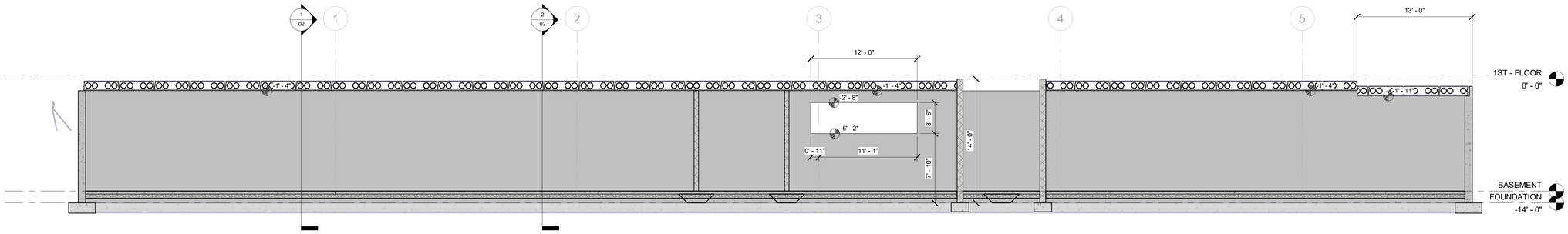

1 S300 ELEVATION - EAST FOUNDATION WALL
3/16" = 1'-0"

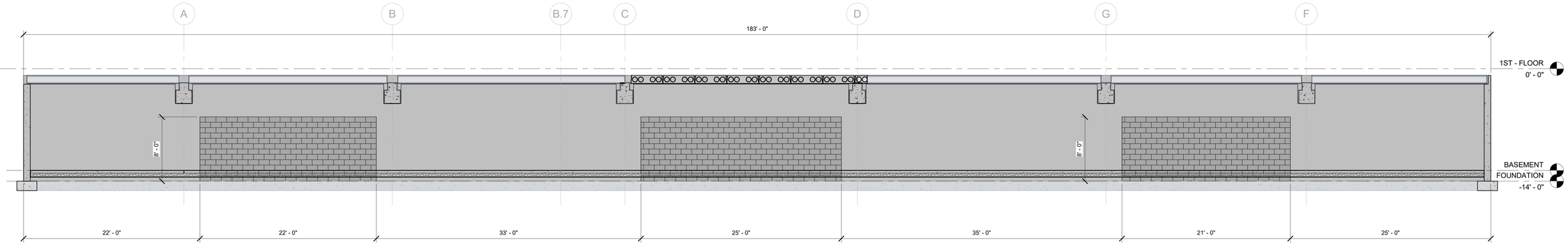

2 S300 ELEVATION - SOUTH FOUNDATION WALL
3/16" = 1'-0"

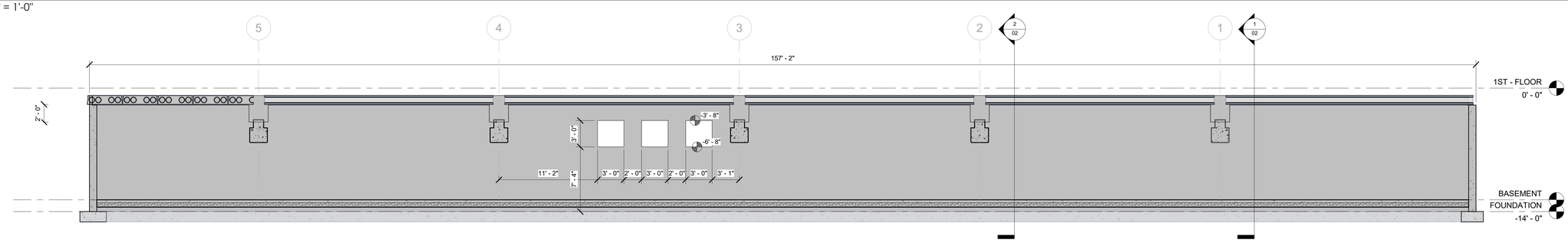

3 S300 ELEVATION - WEST FOUNDATION WALL
3/16" = 1'-0"

CAPITAL GROUP
Developer: W Capital Group
tyler@wcapitalgroupre.com | 608.345.9848

Architect: OpeningDesign
316 W Washington Ave | Suite 675
Madison, WI 53703
ryan@openingdesign.com | 773.425.6456

General Contractor: ROYAL CONSTRUCTION
3653 Greenway Street | Eau Claire, WI 54701
jim@royalbuilt.com | 715-225-6377

Civil Engineer: CEDAR CORPORATION
604 Wilson Avenue | Menomonie, WI 54751
kevin.olum@cedarcorp.com | 715-235-9081

Structural Engineer: XC Structural Engineering
Calle Apolonio Morales, 628036 Madrid,
l.perezfafo@xcengineering.xyz | +34 610 56 26 37

Structural Engineer of Record: Ennovation
4729 Dale-Curtain Dr, McFarland, WI 53558
kfrey@ennovationbuilt.com

Mechanical Engineer: HOVLAND'S HVAC
10954 E. Melby Street | Chippewa Falls, WI 54729
jhansen@hovlands-inc.com | 715.552.5595

Electrical Engineer: PRISM DESIGN ELECTRICAL CONSULTANS INC
E8403 State Rd 85 | Mondovi, WI 54755
bhalgren@prismdesign-electrical.com | 715.797.0602

Plumbing Engineer: TAILORED ENGINEERING
1600 Aspen Commons | Ste 210 | Middleton, WI 53562
bnovak@tailoredeng.com | 608.209.7500

Date	Description
09.25.2019	<Progress>

ELEVATIONS - FOUNDATION

CANNERY TRAIL RESIDENCES - 1750 N OXFORD AVE. - EAU CLAIRE, WI

S300

10/1/2019 11:47:04 AM

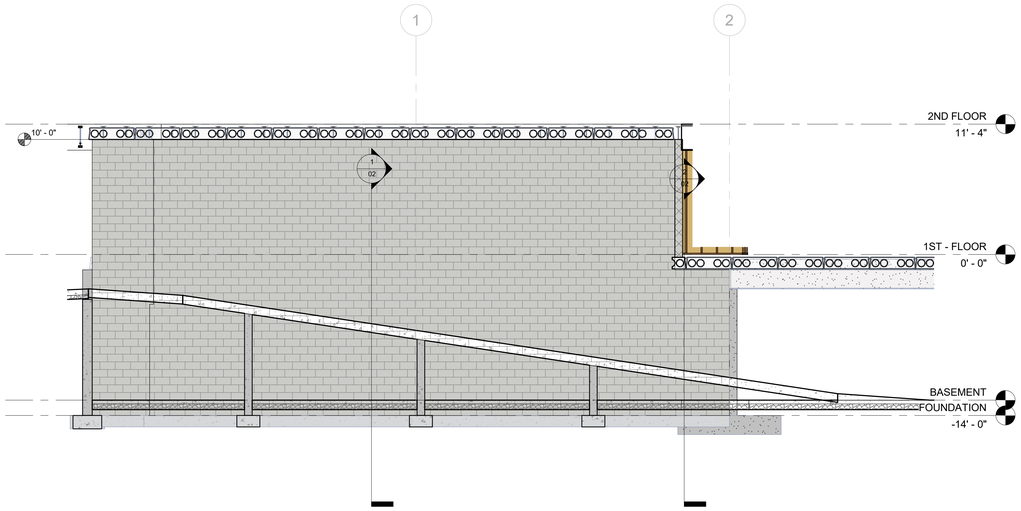

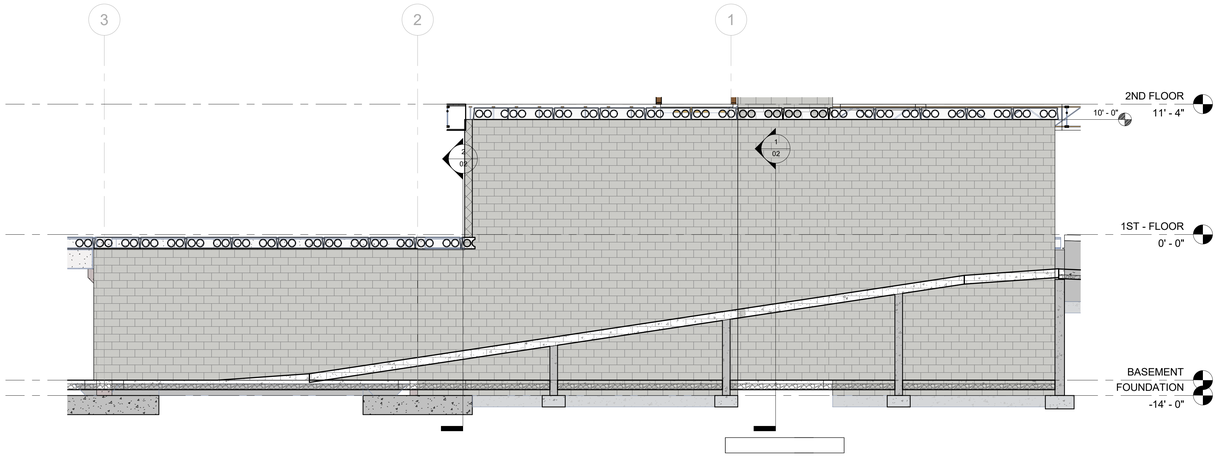

CAPITAL GROUP
Developer: W Capital Group
tyler@wcapitalgroupre.com | 608.345.9848

Architect: OpeningDesign
316 W Washington Ave | Suite 675
Madison, WI 53703
ryan@openingdesign.com | 773.425.6456

General Contractor: ROYAL CONSTRUCTION
3653 Greenway Street | Eau Claire, WI 54701
jim@royalbuilt.com | 715-225-6377

Civil Engineer: CEDAR CORPORATION
604 Wilson Avenue |Menomonie, WI 54751
kevin.olum@cedarcorp.com | 715-235-9081

Structural Engineer: XC Structural Engineering
Calle Apolonio Morales, 628036 Madrid,
l.perezfafo@xcengineering.xyz | +34 610 56 26 37

Structural Engineer of Record: Ennovation
4729 Dale-Curtain Dr, McFarland, WI 53558
kfrey@ennovationbuilt.com

Mechanical Engineer: HOVLAND'S HVAC
10954 E. Melby Street |Chippewa Falls, WI 54729
jhansen@hovlands-inc.com | 715.552.5595

Electrical Engineer: PRISM DESIGN ELECTRICAL CONSULTANS INC.
E8403 State Rd 85 |Mondovi, WI 54755
bhalgren@prismdesign-electrical.com | 715.797.0602

Plumbing Engineer: TAILORED ENGINEERING
1600 Aspen Commons | Ste 210 |Middleton, WI 53562
bnovak@tailoredeng.com | 608.209.7500

Date	Description
09.25.2019	<Progress>

ELEVATIONS - FOUNDATION

CANNERY TRAIL RESIDENCES - 1750 N OXFORD AVE. - EAU CLAIRE, WI

S301

10/1/2019 11:47:16 AM

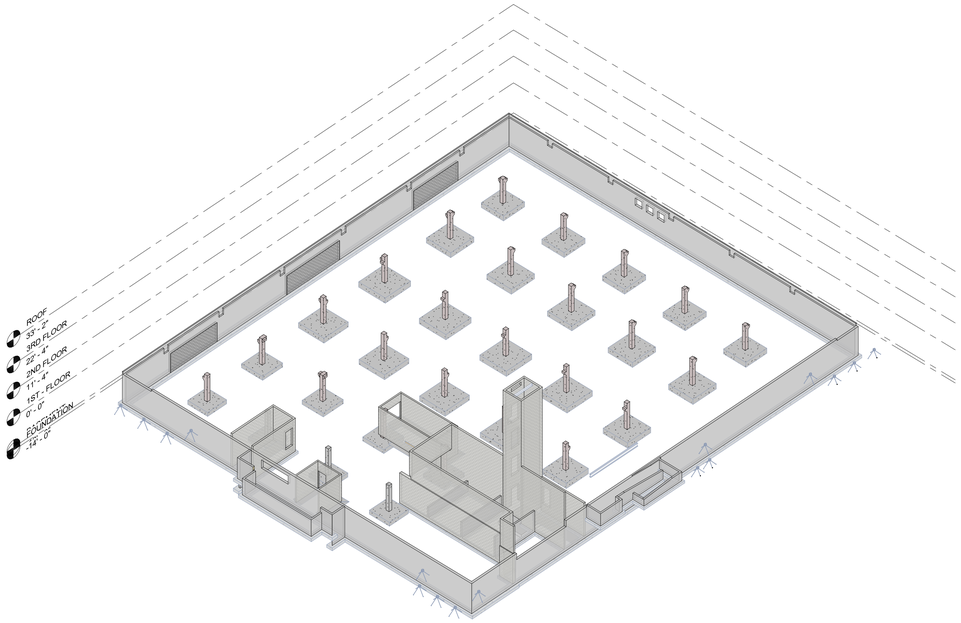

2 S400 FOUNDATION - 3D - VIEW 1

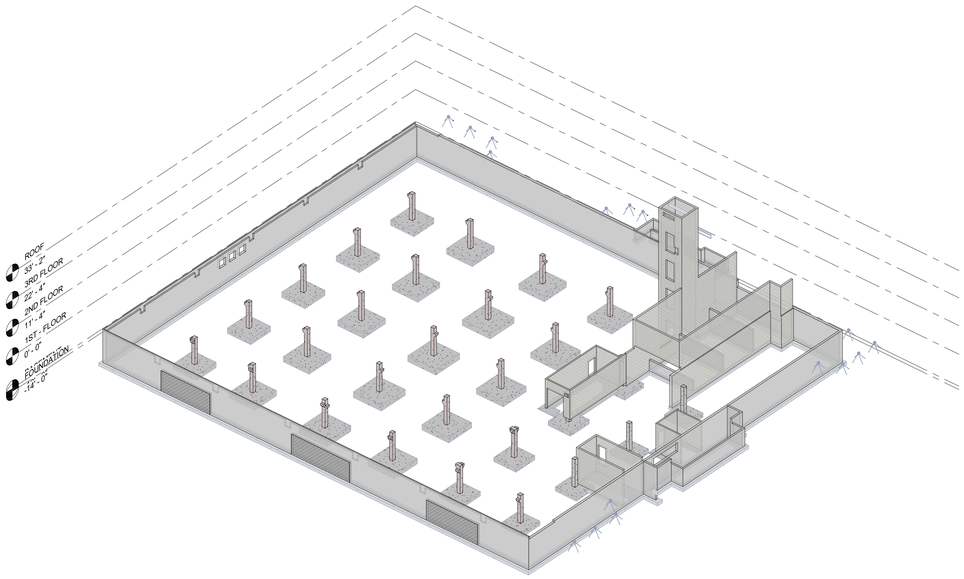

3 S400 FOUNDATION - 3D - VIEW 2

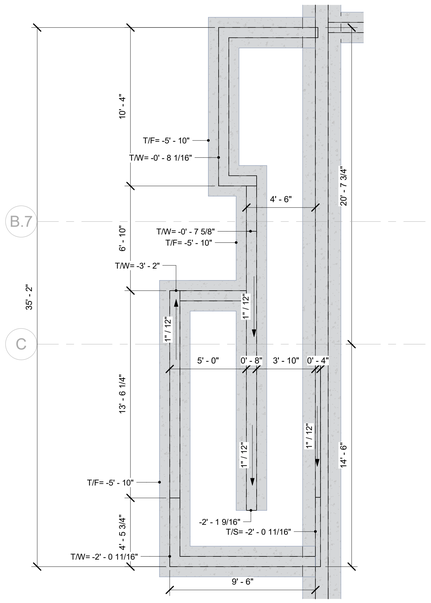

1 S400 ENLARGED PLAN - RAMP
1/4" = 1'-0"

CAPITAL GROUP
Developer: W Capital Group
tyler@wcapitalgroupre.com | 608.345.9848

Architect: OpeningDesign
316 W Washington Ave | Suite 675
Madison, WI 53703
ryan@openingdesign.com | 773.425.6456

General Contractor: ROYAL CONSTRUCTION
3653 Greenway Street | Eau Claire, WI 54701
jim@royalbuilt.com | 715-225-6377

Civil Engineer: CEDAR CORPORATION
604 Wilson Avenue |Menomonie, WI 54751
kevin.olum@cedarcorp.com | 715-235-9081

Structural Engineer: XC Structural Engineering
Calle Apolonio Morales, 628036 Madrid,
l.perezfafo@xcengineering.xyz | +34 610 56 26 37

Structural Engineer of Record: Ennovation
4729 Dale-Curtain Dr, McFarland, WI 53558
kfrey@ennovationbuilt.com

Mechanical Engineer: HOVLAND'S HVAC
10954 E. Melby Street |Chippewa Falls, WI 54729
jhansen@hovlands-inc.com | 715.552.5595

Electrical Engineer: PRISM DESIGN ELECTRICAL CONSULTANS INC.
E8403 State Rd 85 |Mondovi, WI 54755
bhalgren@prismdesign-electrical.com | 715.797.0602

Plumbing Engineer: TAILORED ENGINEERING
1600 Aspen Commons | Ste 210 |Middleton, WI 53562
bnovak@tailoredeng.com | 608.209.7500

Date	Description
09.25.2019	<Progress>

CANNERY TRAIL RESIDENCES - 1750 N OXFORD AVE. - EAU CLAIRE, WI

ENLARGED PLANS

S400

10/1/2019 11:47:28 AM