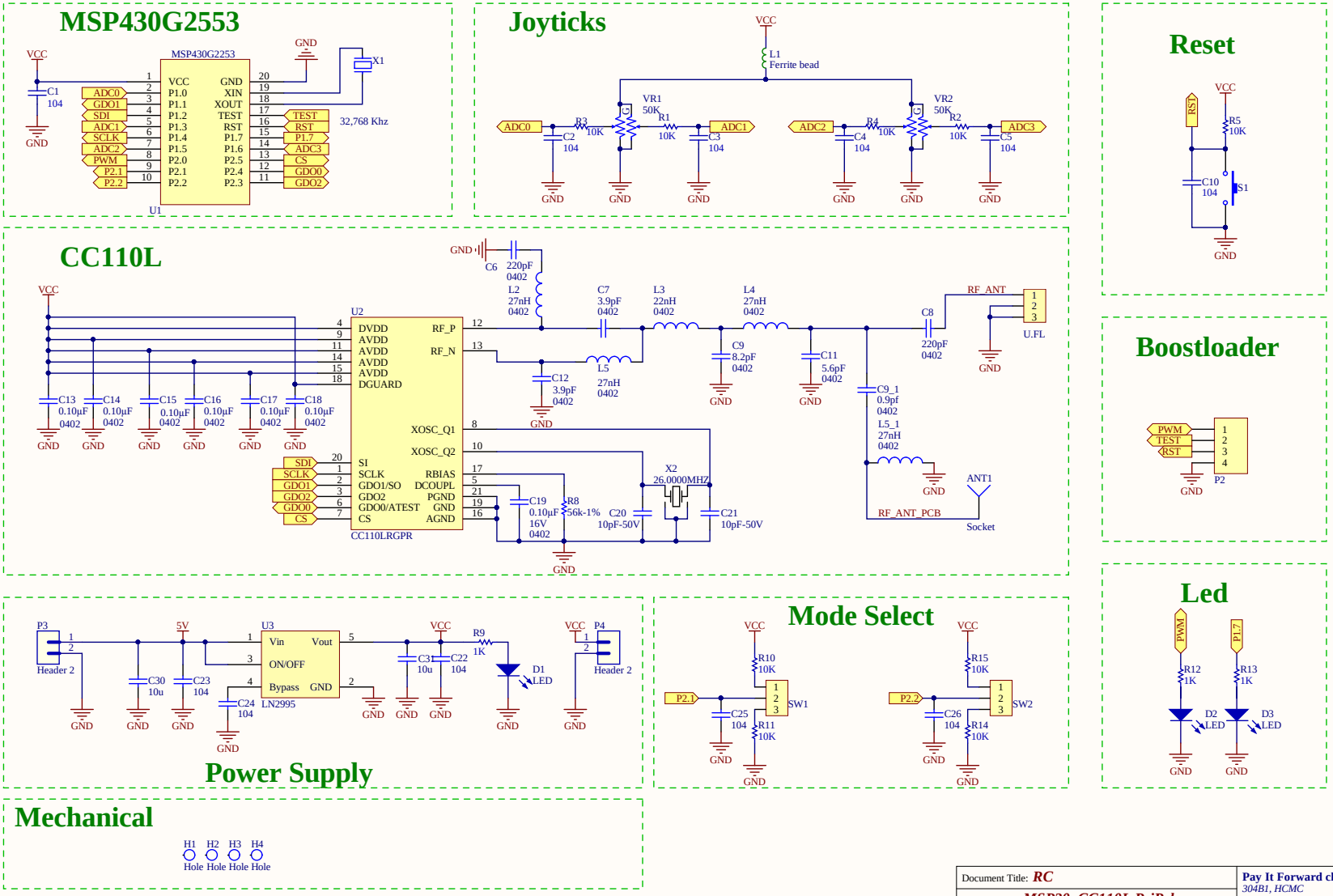

Document Title: *RC*			**Pay It Forward club** *304B1, HCMC* *268 Ly Thuong Kiet street* *Ward 14, District 10* *Ho Chi Minh city, Vietnam*
Project Name: *MSP30_CC110L.PrjPcb*			
Size: B	Designer: PIF.HW Team	Revision: v1.3	
Date: 04/11/2017	Time: 12:25:28	Sheet 1 of 1	
File: C:\Users\minht57\Downloads\50_Release\RC\RYA_KiteUp_RC.SchDoc			

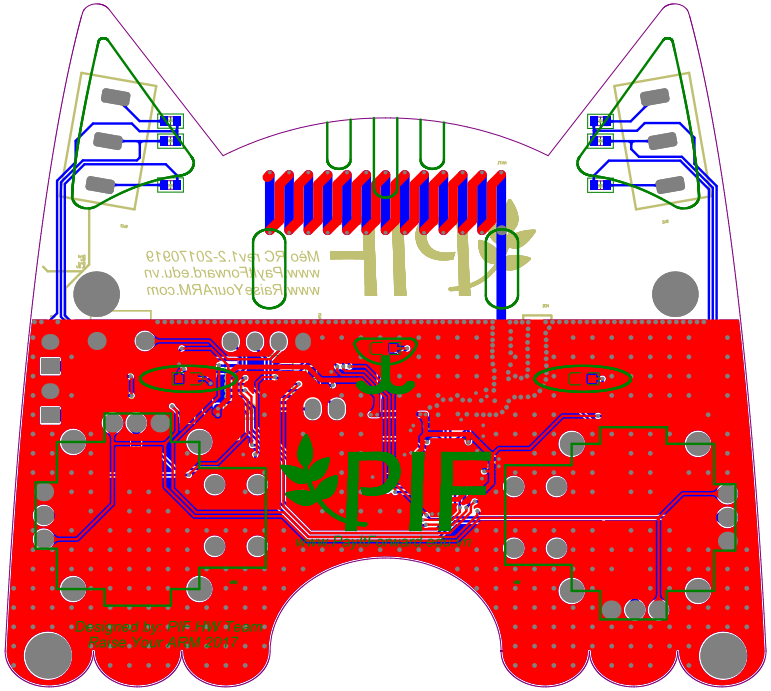
Designed by: PIF HW Team
Raise Your ARM 2017