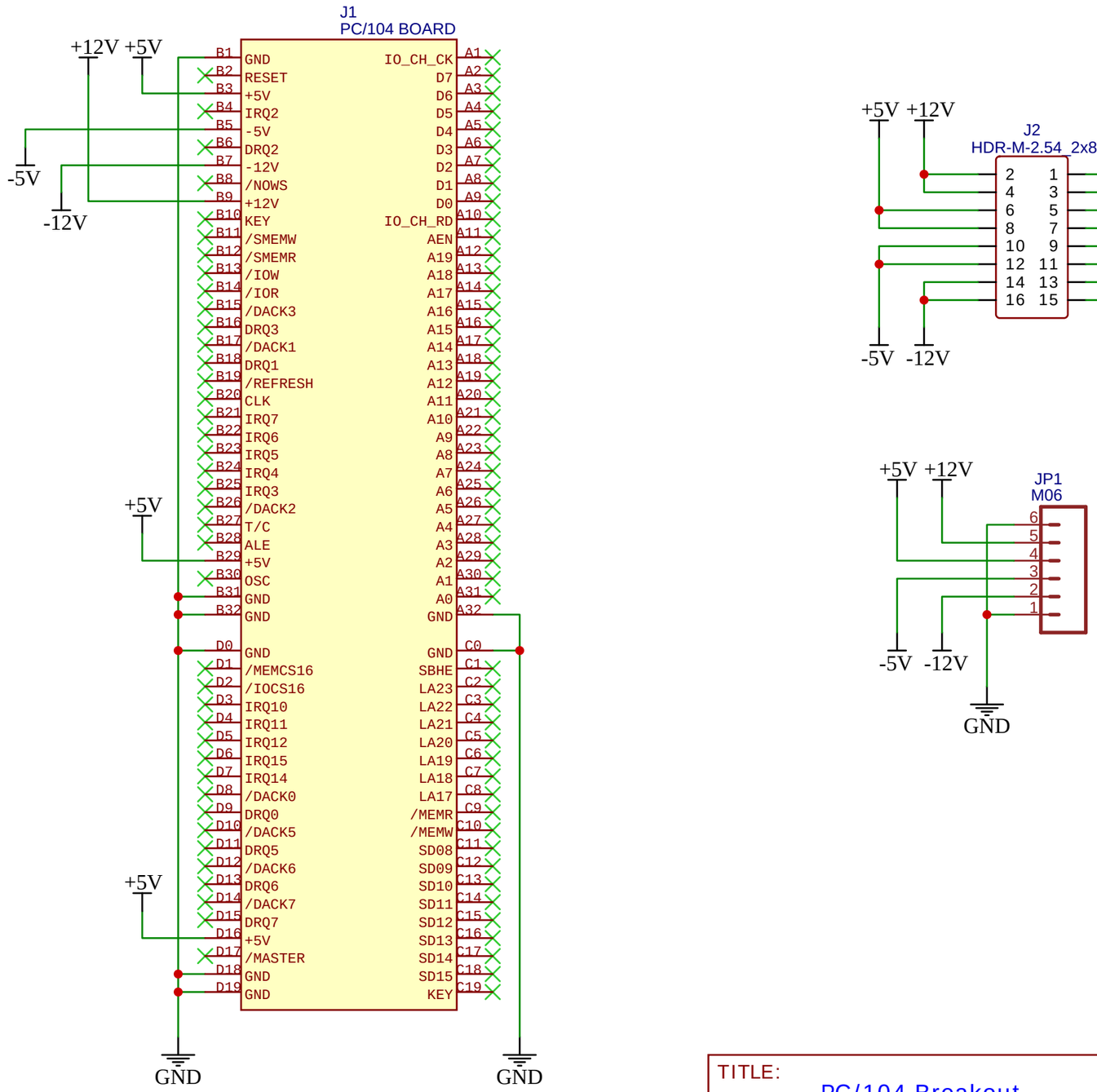

TITLE: PC/104 Breakout		REV: 1.1
	Company:	Sheet: 1/1
	Date: 2024-06-11 Drawn By:	