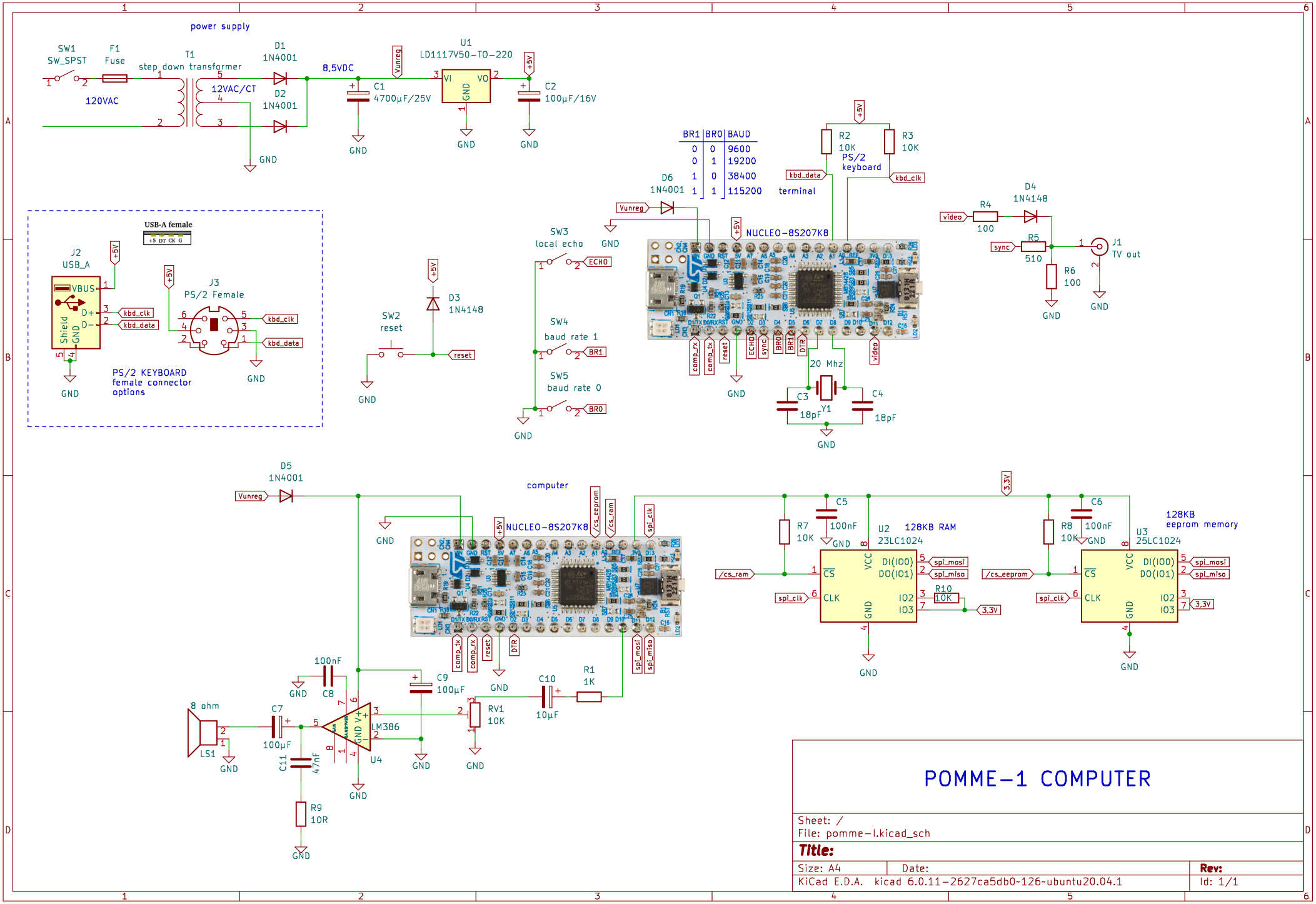

POMME-1 COMPUTER

Sheet: /
File: pomme-1.kicad_sch

Title:

Size: A4	Date:	Rev:
KiCad E.D.A. kicad 6.0.11-2627ca5db0~126~ubuntu20.04.1		Id: 1/1