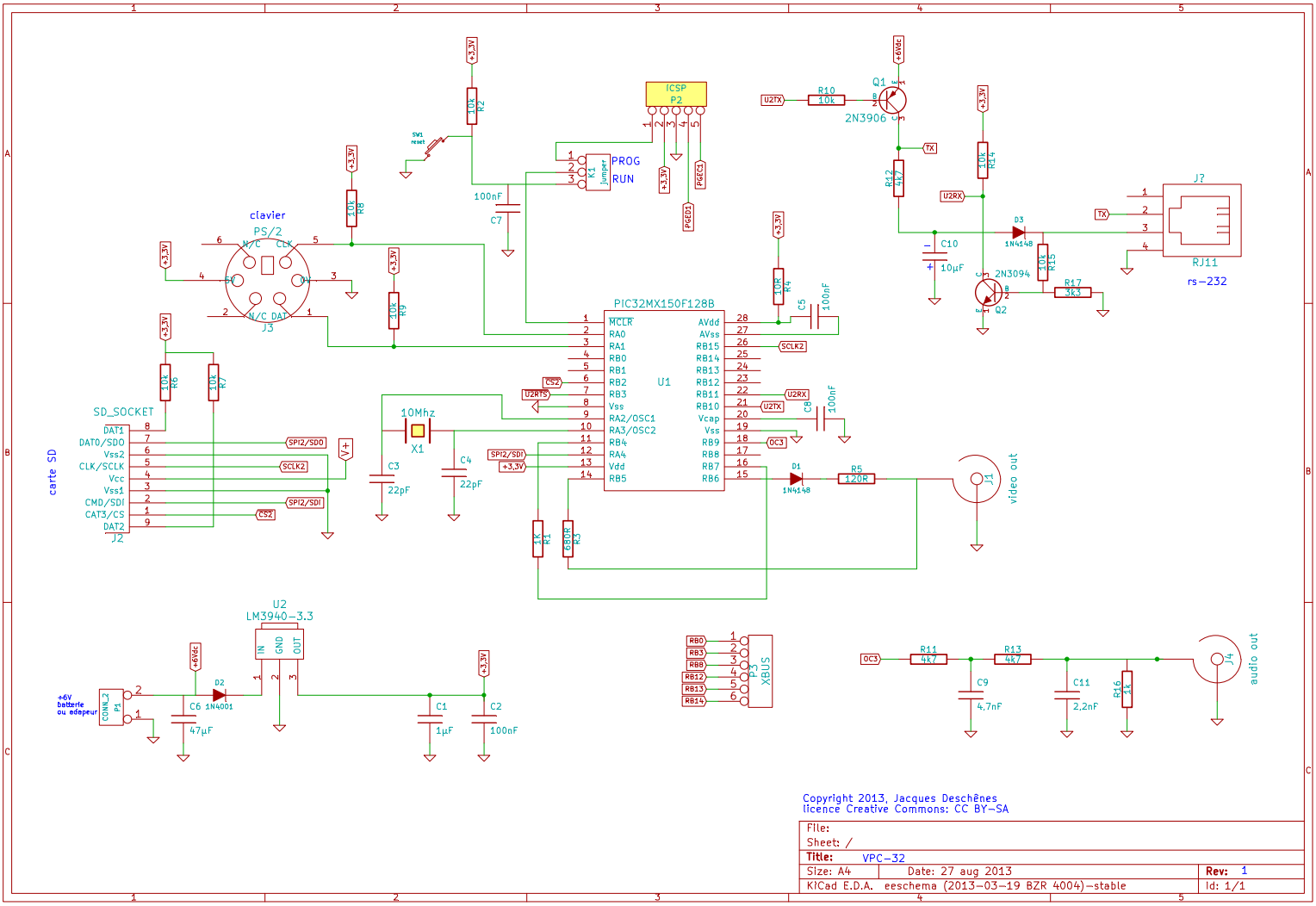

Copyright 2013, Jacques Deschênes
licence Creative Commons: CC BY-SA

File:		
Sheet: /		
Title: VPC-32		
Size: A4	Date: 27 aug 2013	**Rev:** 1
KiCad E.D.A. eeschema (2013-03-19 BZR 4004)-stable		Id: 1/1