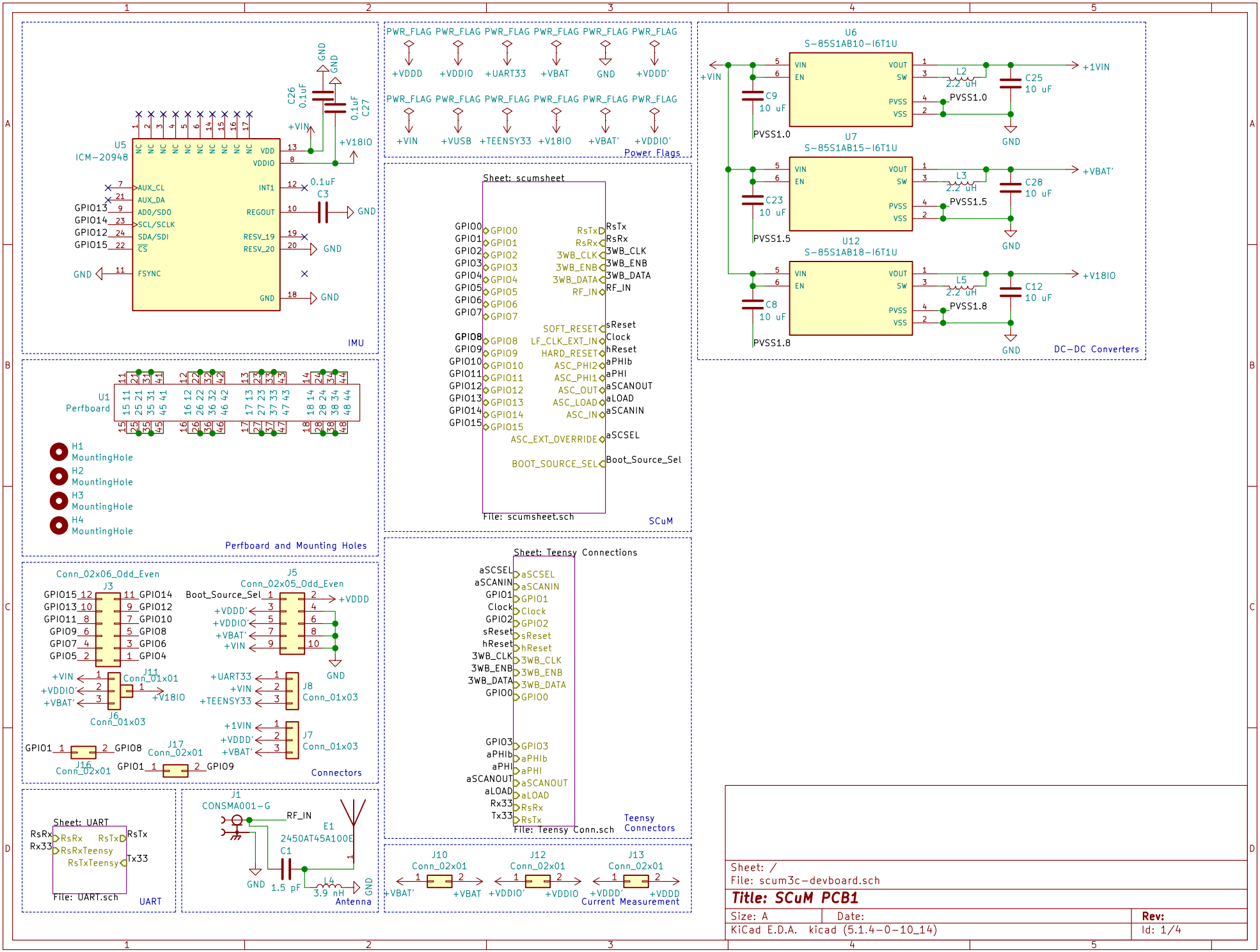
U5
ICM-20948
IMU
U1
Perfboard
H1 MountingHole
H2 MountingHole
H3 MountingHole
H4 MountingHole
Perfboard and Mounting Holes
Connectors
UART
Antenna
Power Flags
Sheet: scumsheet
File: scumsheet.sch
SCuM
Sheet: Teensy Connections
File: Teensy Conn.sch
Teensy Connections
Current Measurement
U6
S-85S1AB10-I6T1U
U7
S-85S1AB15-I6T1U
U12
S-85S1AB18-I6T1U
DC-DC Converters
Sheet: /
File: scum3c-devboard.sch
Title: SCuM PCB1
Size: A
Date:
Rev:
KiCad E.D.A. kicad (5.1.4-0-10_14)
Id: 1/4

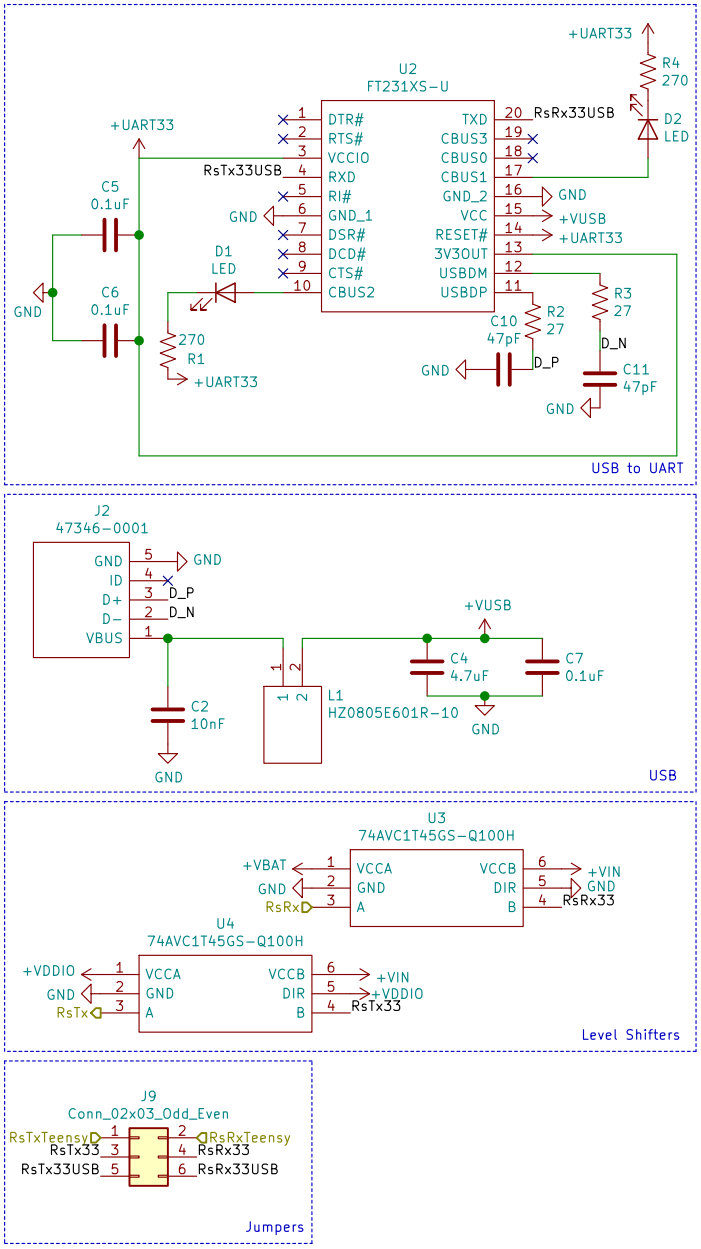

Sheet: /UART/
File: UART.sch

Title:

Size: A4	Date:	**Rev:**
KiCad E.D.A. kicad (5.1.4-0-10_14)		Id: 2/4

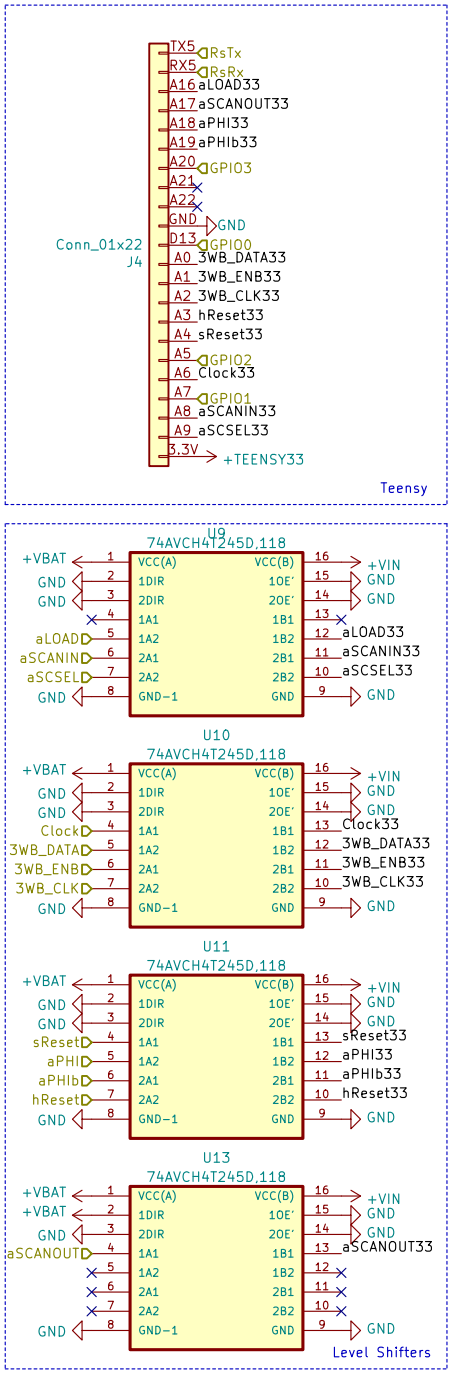

Sheet: /Teensy Connections/
File: Teensy Conn.sch

Title:

Size: A4	Date:	**Rev:**
KiCad E.D.A. kicad (5.1.4-0-10_14)		Id: 3/4

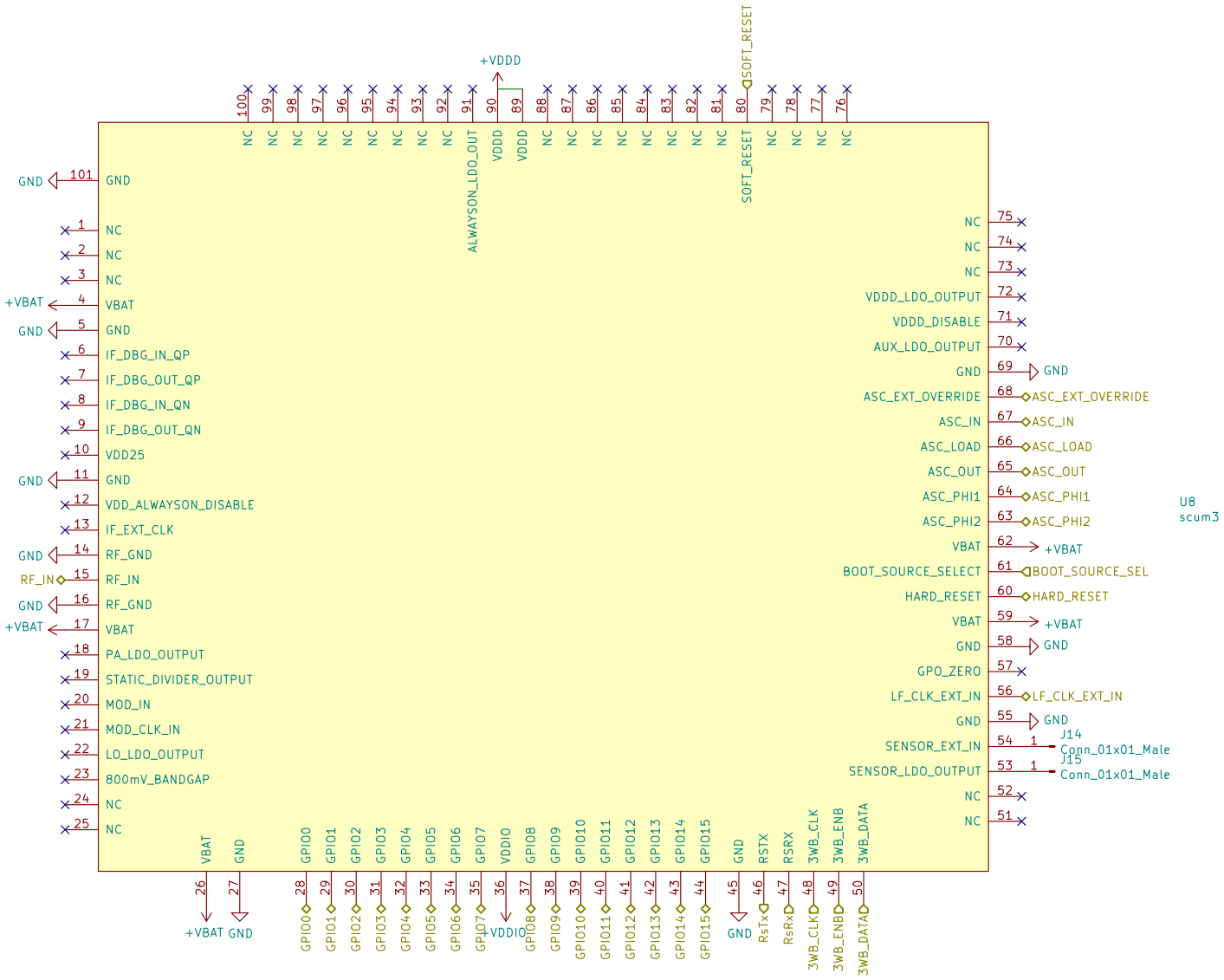

Sheet: /scumsheet/
File: scumsheet.sch

Title:

Size: A4	Date:	**Rev:**
KiCad E.D.A. kicad (5.1.4-0-10_14)		Id: 4/4