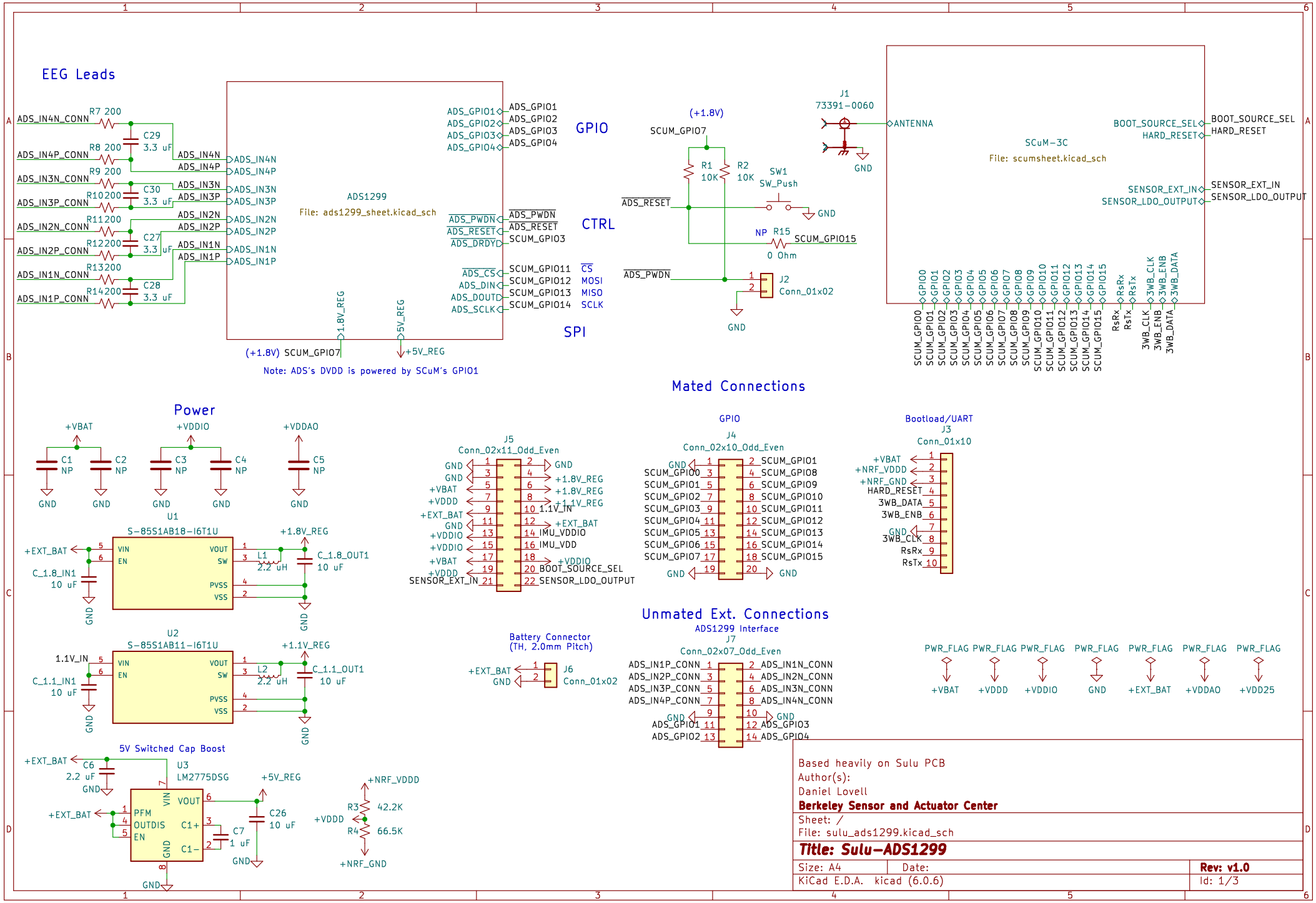
EEG Leads
ADS_IN4N_CONN
ADS_IN4P_CONN
ADS_IN3N_CONN
ADS_IN3P_CONN
ADS_IN2N_CONN
ADS_IN2P_CONN
ADS_IN1N_CONN
ADS_IN1P_CONN
R7 200
R8 200
R9 200
R10 200
R11 200
R12 200
R13 200
R14 200
C29 3.3 uF
C30 3.3 uF
C27 3.3 uF
C28 3.3 uF
ADS1299
File: ads1299_sheet.kicad_sch
ADS_GPIO1
ADS_GPIO2
ADS_GPIO3
ADS_GPIO4
GPIO
ADS_PWDN
ADS_RESET
SCUM_GPIO3
CTRL
ADS_CS
ADS_DIN
ADS_DOUT
ADS_SCLK
SCUM_GPIO11
SCUM_GPIO12
SCUM_GPIO13
SCUM_GPIO14
CS
MOSI
MISO
SCLK
SPI
1.8V_REG
5V_REG
(+1.8V) SCUM_GPIO7
+5V_REG
Note: ADS's DVDD is powered by SCuM's GPIO1
(+1.8V)
SCUM_GPIO7
R1 10K
R2 10K
SW1 SW_Push
ADS_RESET
GND
NP R15
SCUM_GPIO15
0 Ohm
ADS_PWDN
J2 Conn_01x02
J1 73391-0060
ANTENNA
SCuM-3C
File: scumsheet.kicad_sch
BOOT_SOURCE_SEL
HARD_RESET
SENSOR_EXT_IN
SENSOR_LDO_OUTPUT
GPIO0
GPIO1
GPIO2
GPIO3
GPIO4
GPIO5
GPIO6
GPIO7
GPIO8
GPIO9
GPIO10
GPIO11
GPIO12
GPIO13
GPIO14
GPIO15
RsRx
RsTx
3WB_CLK
3WB_ENB
3WB_DATA
Power
+VBAT
+VDDIO
+VDDAO
C1 NP
C2 NP
C3 NP
C4 NP
C5 NP
U1
S-85S1AB18-I6T1U
VIN
EN
VOUT
SW
PVSS
VSS
+EXT_BAT
C_1.8_IN1 10 uF
L1 2.2 uH
+1.8V_REG
C_1.8_OUT1 10 uF
U2
S-85S1AB11-I6T1U
1.1V_IN
C_1.1_IN1 10 uF
L2 2.2 uH
+1.1V_REG
C_1.1_OUT1 10 uF
5V Switched Cap Boost
C6 2.2 uF
U3 LM2775DSG
PFM
OUTDIS
C1+
C1-
C7 1 uF
C26 10 uF
+5V_REG
+NRF_VDDD
R3 42.2K
R4 66.5K
+NRF_GND
Mated Connections
J5 Conn_02x11_Odd_Even
GND
+1.8V_REG
+VBAT
+VDDD
+EXT_BAT
1.1V_IN
IMU_VDDIO
IMU_VDD
+VDDIO
BOOT_SOURCE_SEL
SENSOR_LDO_OUTPUT
SENSOR_EXT_IN
GPIO
J4 Conn_02x10_Odd_Even
SCUM_GPIO0
SCUM_GPIO1
SCUM_GPIO2
SCUM_GPIO3
SCUM_GPIO4
SCUM_GPIO5
SCUM_GPIO6
SCUM_GPIO7
SCUM_GPIO8
SCUM_GPIO9
SCUM_GPIO10
SCUM_GPIO11
SCUM_GPIO12
SCUM_GPIO13
SCUM_GPIO14
SCUM_GPIO15
Bootload/UART
J3 Conn_01x10
+NRF_VDDD
+NRF_GND
HARD_RESET
3WB_DATA
3WB_ENB
3WB_CLK
RsRx
RsTx
Unmated Ext. Connections
Battery Connector (TH, 2.0mm Pitch)
J6 Conn_01x02
ADS1299 Interface
J7 Conn_02x07_Odd_Even
ADS_IN1P_CONN
ADS_IN2P_CONN
ADS_IN3P_CONN
ADS_IN4P_CONN
ADS_IN1N_CONN
ADS_IN2N_CONN
ADS_IN3N_CONN
ADS_IN4N_CONN
ADS_GPIO1
ADS_GPIO2
ADS_GPIO3
ADS_GPIO4
PWR_FLAG
+VBAT
+VDDD
+VDDIO
GND
+EXT_BAT
+VDDAO
+VDD25
Based heavily on Sulu PCB
Author(s):
Daniel Lovell
Berkeley Sensor and Actuator Center
Sheet: /
File: sulu_ads1299.kicad_sch
Title: Sulu-ADS1299
Size: A4
Date:
Rev: v1.0
KiCad E.D.A. kicad (6.0.6)
Id: 1/3

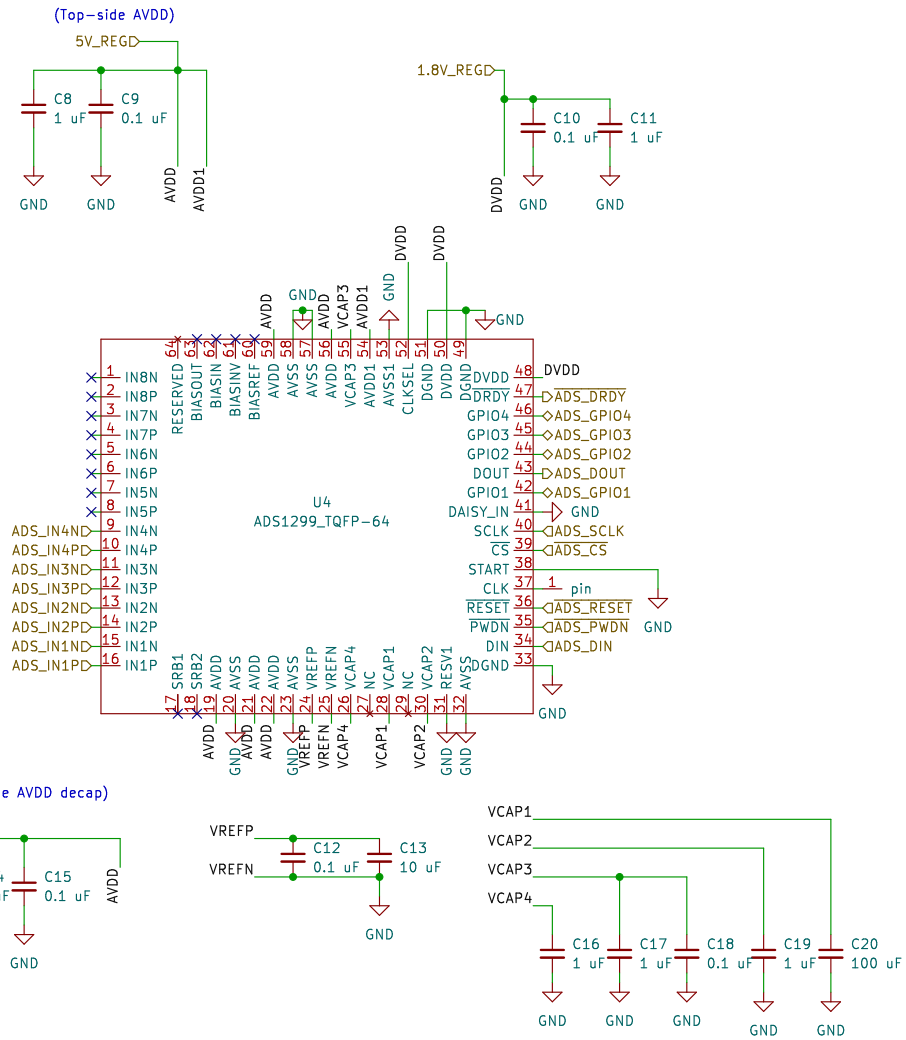

Sheet: /ADS1299/
File: ads1299_sheet.kicad_sch

Title:

Size: A4	Date:	Rev:
KiCad E.D.A. kicad (6.0.6)		Id: 2/3

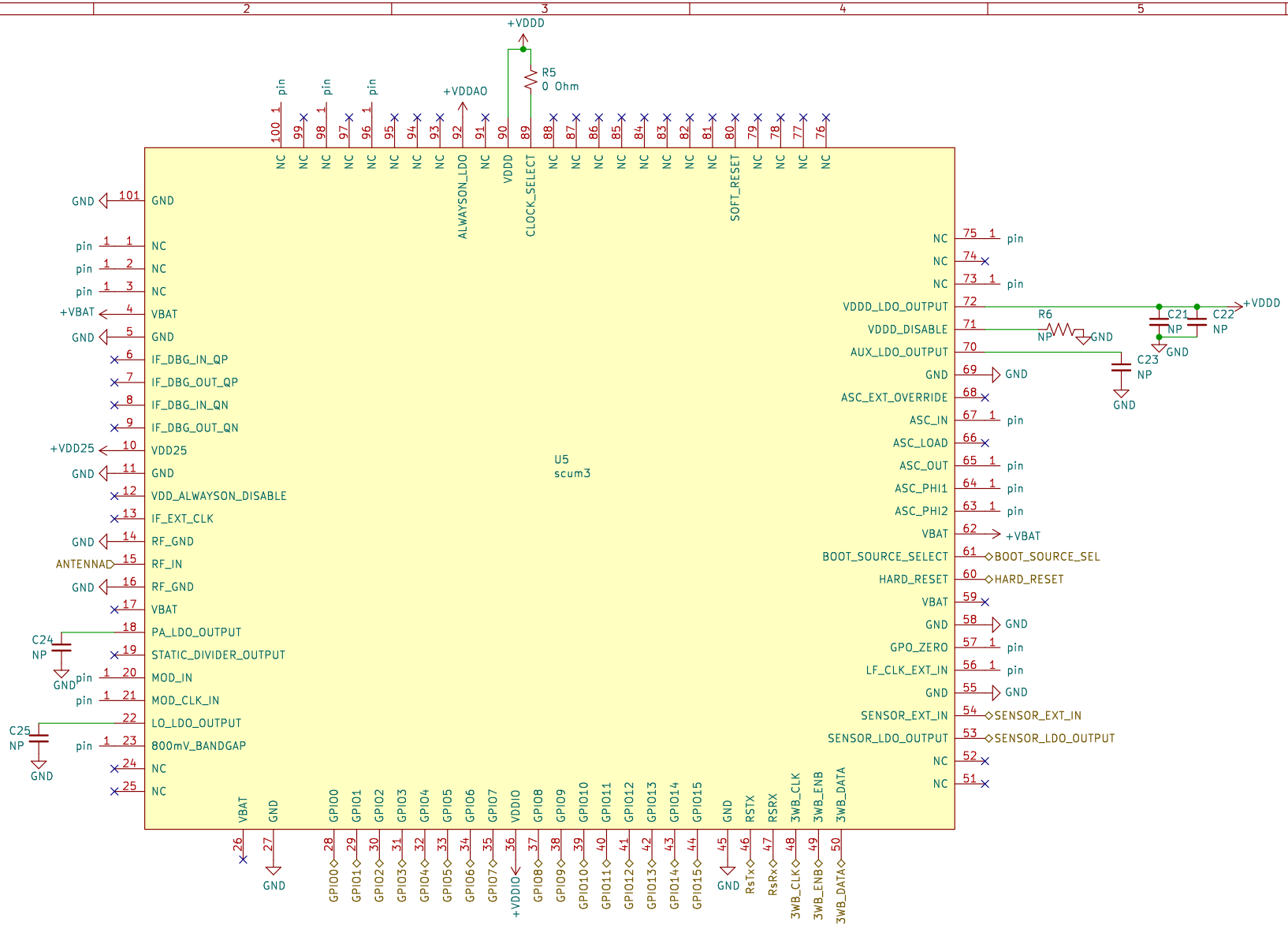

Sheet: /SCuM-3C/
File: scumsheet.kicad_sch

Title:

Size: A4	Date:	Rev:
KiCad E.D.A. kicad (6.0.6)		Id: 3/3