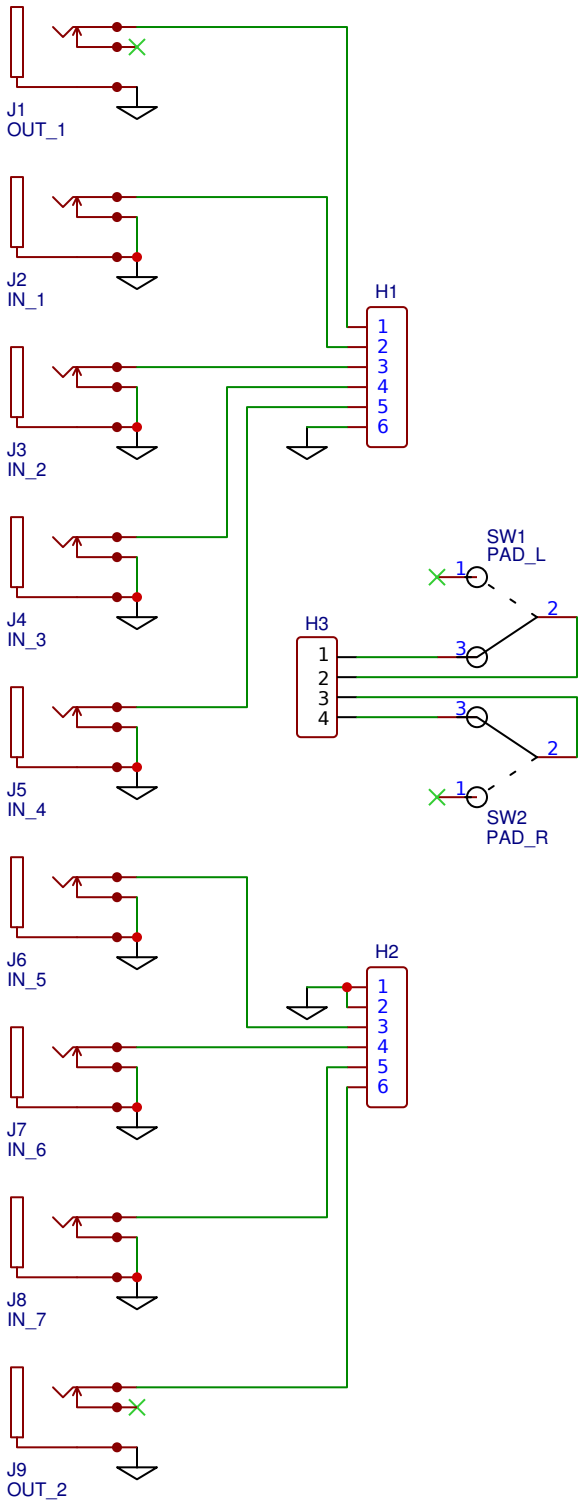


TITLE: µSt - Control Board

Original design by Jesper Särnesjö - CC-BY-SA 4.0

REV: 1.0

olivella modular

Company: Olivella Modular

Sheet: 1/1

Date: 2020-04-28

Drawn By: Kevin Olivella