VERSION HISTORY

Revision	Description	Date	Drawn	Checked	Approved
Ver 1.2	Release version	2019-11-25			

Index:

01 VERSION HISTORY
02 BLOCK DIAGRAM
03 POWER TREE
04 LPDDR3 FGBA178
05 CPU
06 PMIC
07 FLASH
08 AUDIO
09 USB/T-CARD
10 CAMERA
11 LCM/CTP
12 SENSORs/MT/KEY
13 DIGITAL VIDEO
14 WIFI-BT

PINE64	Pine64
Title	PineTab Schematic ver 1.2
Document Number	VERSION HISTORY
Size A3	制作： 审核： Rev V1.2
Date: Monday, November 25, 2019	Sheet 16 of 16

BLOCK DIAGRAM

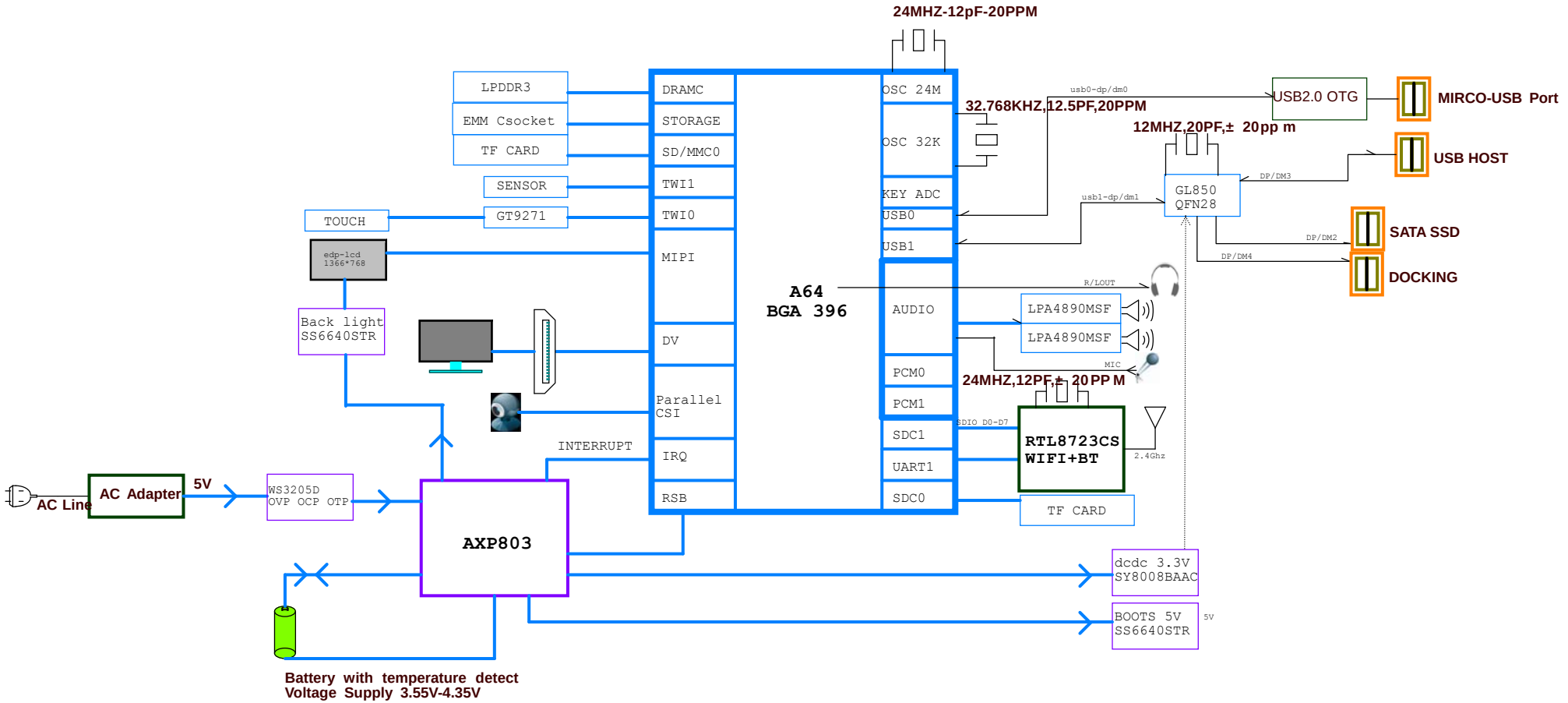

PINE64	Pine64		
	Title	PineTab Schematic ver 1.2	
	Document Number	BLOCK DIAGRAM	
Size A3	制作：	审核：	Rev V1.2
Date: Monday, November 25, 2019	Sheet 16 of 16		

POWER TREE

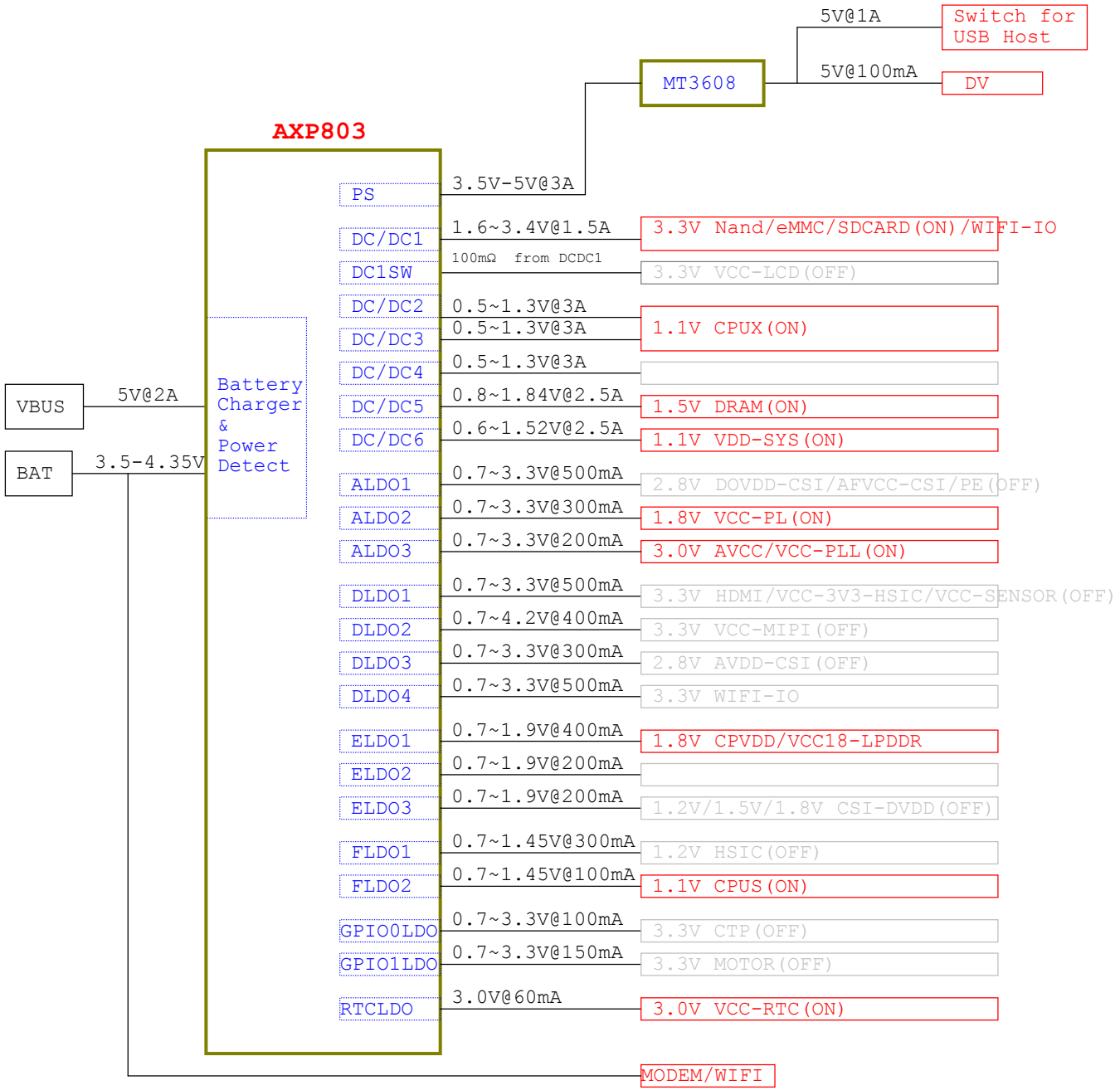

PINE64	Pine64		
	Title	PineTab Schematic ver 1.2	
	Document Number	POWER TREE	
Size A3	制作：	审核：	Rev V1.2
Date: Monday, November 25, 2019	Sheet 16 of 16		

LPDDR3

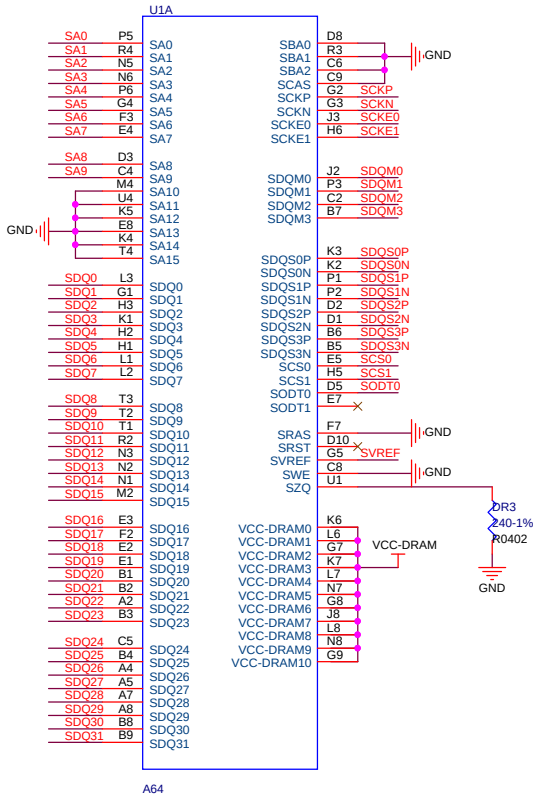

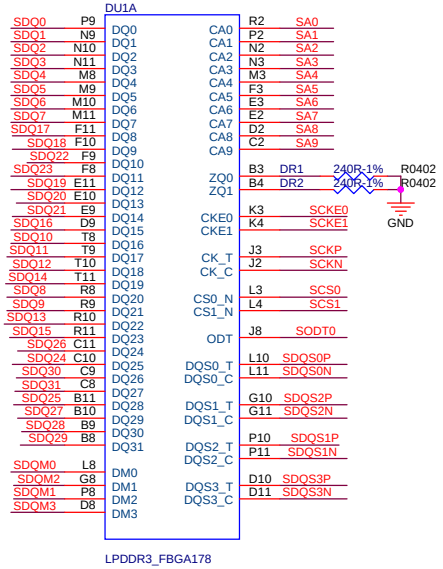

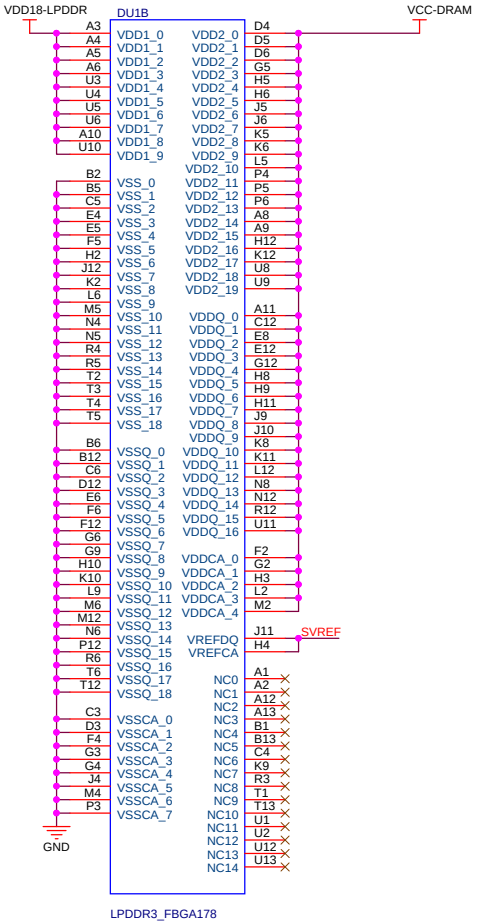

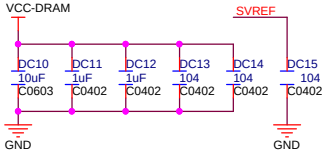

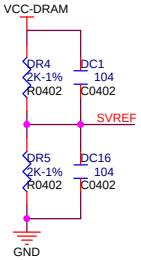

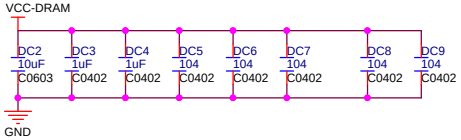

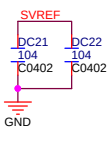

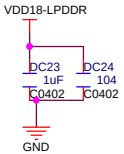

PINE64 | Pine64

Title	PineTab Schematic ver 1.2
Document Number	LPDDR3-FBGA178
Size	A3
制作：	审核：
Rev	V1.2
Date:	Monday, November 25, 2019
Sheet	16 of 16

CPU

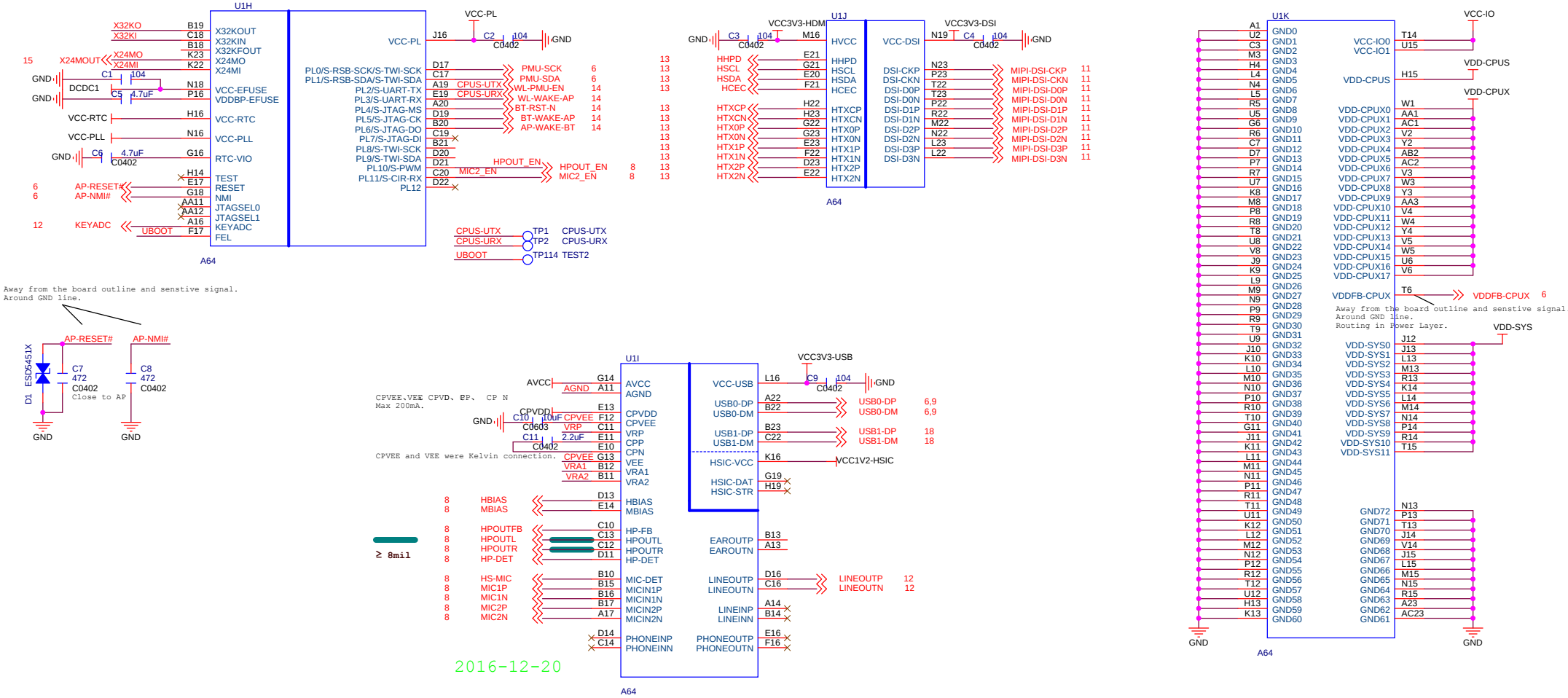

PINE64	Pine64		
	Title	PineTab Schematic ver 1.2	
	Document Number	CPU	
Size A3	制作：	审核：	Rev V1.2
Date: Monday, November 25, 2019	Sheet 16 of 16		

Power

From AC adapter

DC 5V → J9709 DS-0346S0R DC_056DIP → F1 FUSE1206 → UFB3 600R-100M-3A L0805 → MLVG0402100NV05 V30 → OC6 10uF/25V C0805, OC7 10uF/25V C0805, OC5 0.1uF/25V C0603, C241 100uF/16V

USB-5V

U9018 WS3205D (ACIN, EN, GND, FLAG, ACIN1, ACIN, OUT1, OUT) → R9693 1 2 NC 1206 5% CH → C2705 10uF 20% 10V X5R 0603 → R9735 0402 100K 1% → OC8 22uF/10V C1206, OC9 22uF/10V C1206 → DC5V

+V5P0_USB → OL1 2.2uH-DCR<0.1R-2A 4018 → OD1 SS14 SOD123 → OU1 SS6640STR SOT23_6 (IN, LX, EN, NC, GND, FB)

R22 100K/1% R0402, C128 10uF/25V C0603, R23 13K/1% R0402, C130 10uF/25V C0603

PS → R8499 CH → PS1 → Q27 GN2305 SOT_23 → R9676 100K R0402, R186 100K R0402

GPIO0-LDO → R9822 1K R0402 → Q29 MMBT3904 SOT_23 → R185 NC/1K R0402

DCDC1 → R9806 NC/0R → R2053 2K → C120 10uF/25V C0603, C125 1uF C0402

2017-05-08

PMIC

DC5V → C45 10uF C0603, C47 10uF C0603, C50 10uF C0603 → U2 AXP803

USBVBUS → R9781 NC/0R R0805 → VBUS

PS → PS1, PS2

Vth < 1.5V
R < 30m ohm
VGS < 4.5V

Q1 WPM1481 (D1, D2, D3, D4, S1, S2, S3, G) → VBAT → C52 10uF C0603, C54 1uF C0402, R7 4mil s, R01 R0805

N_BATDRV, BATSENSE, LOADSENSE, LX_CHG, VIN_CHG, Charger & Meter

L4 1.0uH-3A_DCR<0.1R SML2520_1P2H → C56 10uF C0603, C58 10uF C0603, C0402, C64 10uF

TS, CHGLED, DP, DM, PWRON, N_VBUSEN, SCK, SDA, IRQ, PWROK, VCC_RTC

9,10 PWRON → R13 1K R0402 → C67 104 C0402

9 USB-DRVVBUS

5 PMU-SCK, 5 PMU-SDA

VCC-RTC → R15 10K R0402

5 AP-NMI#, 5 AP-RESET#

C70 10uF C0603, C71 10uF C0603, C74 4.7uF C0603, C76 4.7uF C0603, C78 4.7uF C0603, C81 4.7uF C0603, C9708 4.7uF C0603, C79 472 C0402

ALDOIN, ALDO1, ALDO2, ALDO3, ALDOs, GPIO0-LDO, GPIO1-LDO

2016-12-13

C85 1uF C0603 VINT, C87 1uF C0603 VREF

C89 10uF C0603, C90 4.7uF C0402, C91 4.7uF C0603 → FLDOIN, FLDO1, FLDO2, FLDOs

AXP803

DC/DC1

L1 1.0uH-2A_DCR<0.1R SML2520_1P2H → DCDC1 → C46 10uF C0603

LX1, DCDC1, SWOUT, VIN1 → DC1-SW → C48 10uF C0603, C49 10uF C0603

DC/DC2

L2 SML2520_1P2H 1.0uH-3A_DCR<0.1R → DCDC2-3 → C55 10uF C0603

LX2_1, LX2_2, DCDC2, VIN2_1, VIN2_2 → VDDFB-CPUX → C51 10uF C0603, C53 10uF C0603

DC/DC3

L3 SML2520_1P2H 1.0uH-3A_DCR<0.1R

LX3_1, LX3_2, DCDC3, VIN3 → VDDFB-CPUX → C57 10uF C0603, C59 10uF C0603

DC/DC4

LX4, DCDC4, VIN4

DC5SET :
Floating : 1.24V
GND : 1.5V
VINT : 1.36V

DC/DC5

L5 CD21 1.0uH-2A_DCR<0.1R → DCDC5 → C65 10uF C0603

LX5, DCDC5, VIN5, DC5SET → R14 NC/0R R0402

A and B mount Close to AP.

DC/DC6

L6 CD21 1.0uH-2A_DCR<0.1R → DCDC6 → C69 10uF C0603

LX6, DCDC6, VIN6 → C68 10uF C0402

DLDOs

DLDOIN, DLDO1, DLDO2, DLDO3, DLDO4 → C72 10uF C0402, C73 4.7uF C0402, C75 4.7uF C0402, C140 4.7uF C0402, C80 4.7uF C0402

ELDOs

ELDOIN, ELDO1, ELDO2, ELDO3 → C83 10uF C0402, C84 4.7uF C0603, C86 4.7uF C0402, C88 4.7uF C0603

GND1, GND2, GND3, GND4, GND5

1.1V

DCDC6 → VDD-SYS

FLDO2 → VDD-CPUS

DCDC2-3 → VDD-CPUX

1.2V

FLDO1 → VCC1V2-HSIC

1.2V/ 1.35V/ 1.5V

DCDC5 → VCC-DRAM

1.8V

ELDO1 → R17 NC-0R R0603 → VCC-PC

VDD18-LPDDR

CPVDD

ELDO2 → +V1P8A

3V

ALDO3 → AVCC, VCC-PLL, VCC-RTC

BB

WIFI

DLDO4 → VCC-WIFI

DLDO4 → VCC-PG, VCC-WIFI-IO

ELDO1 → R19 NC/0R R0402, R20 0R R0402

CAMERA

ELDO3 → DVDD1V8-CSI

DLDO3 → AVDD-CSI

ALDO1 → AFVCC-CSI, DOVDD-CSI, VCC-PE

3.3V

DLDO1 → VCC3V3-HDMI, VCC3V3-DSI, VCC-SENSOR

DCDC1 → VCC-CARD, VCC-NAND, VCC-PC, R18 0R R0402, VCC-EMMC, VCC3V3-USB, VCC-IO, VCC-DMIC, VCC-PD

DC1-SW → VCC-LCD

GPIO1-LDO → VCC-CTP

5V

+V5P0_USB → VCC-5V

PL

ALDO2 → VCC-PL

eDP 2.5V

DLDO2 → VDD2V5-LCD

BAT

IF use the battery temperature sensor: A=NC
otherwise: A=10k

HS8805 J1600 → TP9884 TP_SMD_1, TP_5X2_5MM BATTHERM1, TS, BATT_THERM1, TP_SMD_1, R26 NC/10K R0402 A, TP9882 TP_SMD_1, TP_5X2_5MM BATT_THERM2, GND7 TP_5X2_5MM

DCIN

DC5V → R28 NC/0R R0805 → USBVBUS

Max 2A, Max 2A

400mil
150mil
100mil
50mil
30mil

PINE64

Pine64

Title	PineTab Schematic ver 1.2
Document Number	POWER
Size	A3
制作：	审核：
Rev	V1.2
Date:	Monday, November 25, 2019
Sheet	16 of 16

NAND/eMMC

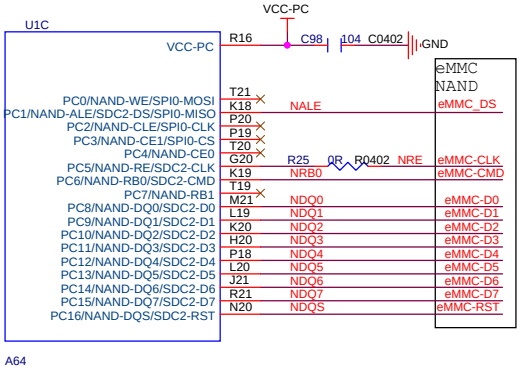

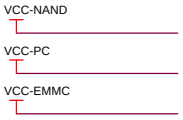

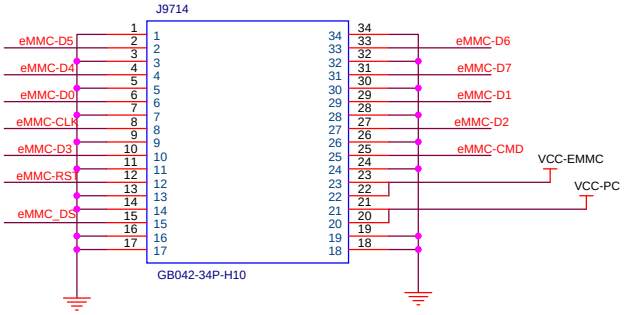

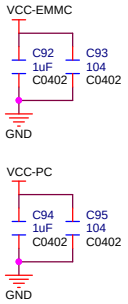

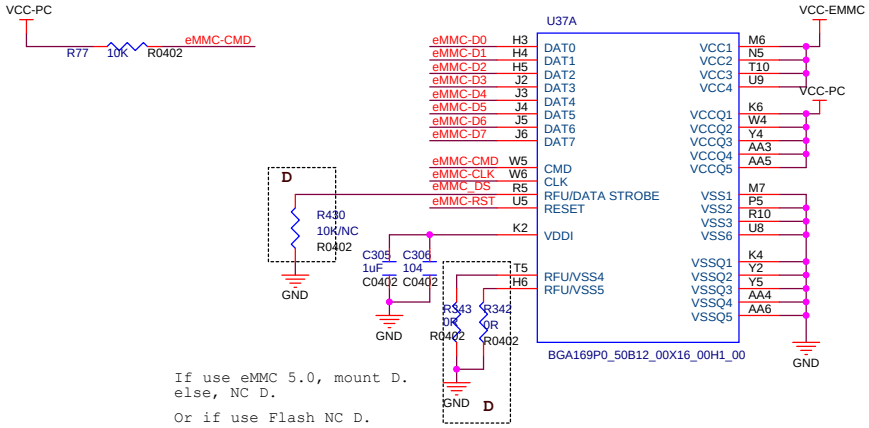

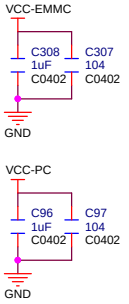

PINE64	Pine64	
	Title: PineTab Schematic ver 1.2	
Size: A3	Document Number: EMMC	Rev: V1.2
Date: Monday, November 25, 2019	制作： 审核：	Sheet 16 of 16

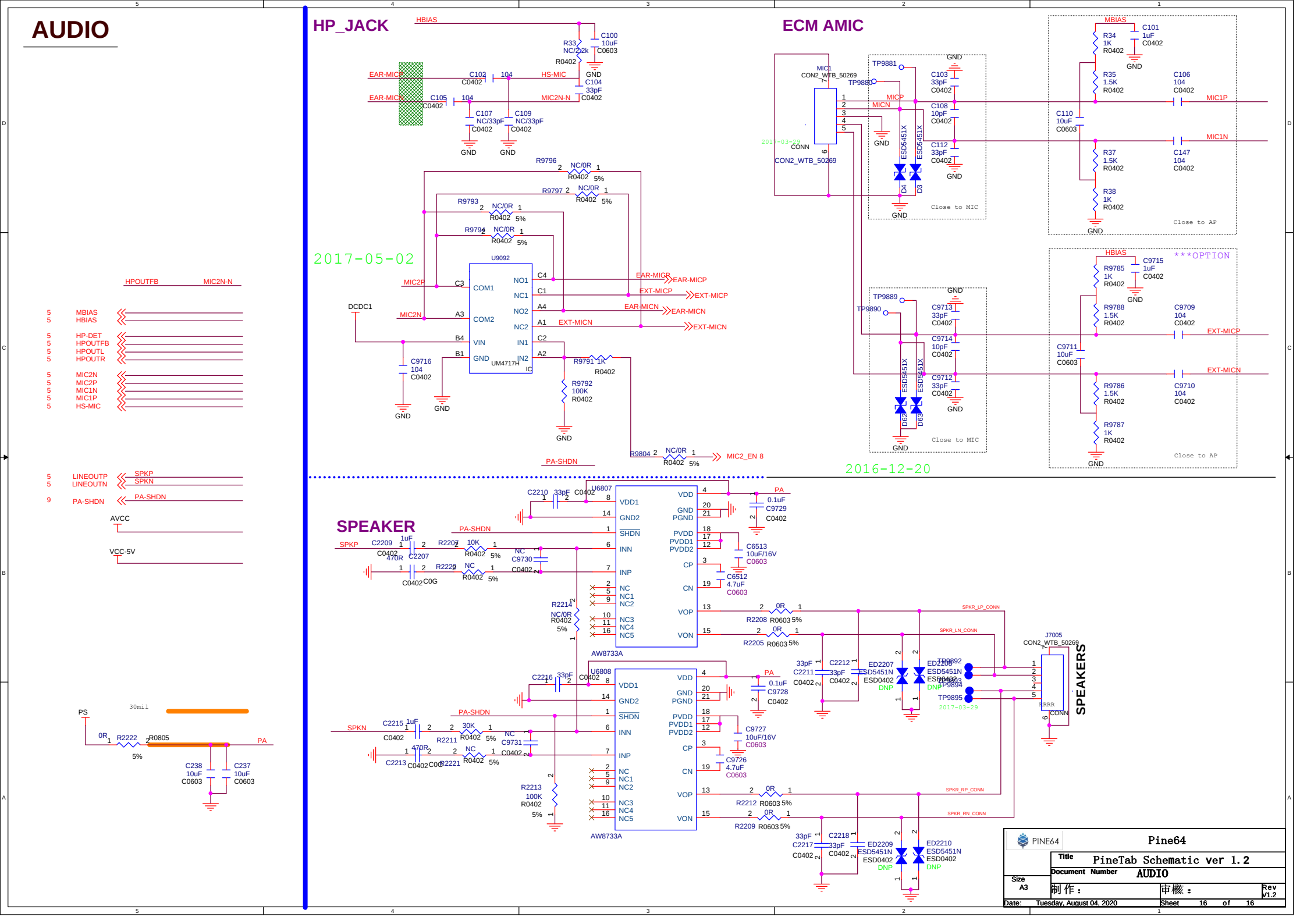
AUDIO
HP_JACK
ECM AMIC
SPEAKER
2017-05-02
2016-12-20
U9092
UM4717H
AW8733A
U6807
U6808
J7005
CON2_WTB_50269
SPEAKERS
HPOUTFB
MIC2N-N
MBIAS
HBIAS
HP-DET
HPOUTFB
HPOUTL
HPOUTR
MIC2N
MIC2P
MIC1N
MIC1P
HS-MIC
LINEOUTP
LINEOUTN
PA-SHDN
AVCC
VCC-5V
PS
PA
SPKP
SPKN
EAR-MICP
EAR-MICN
EXT-MICP
EXT-MICN
MIC2_EN 8
Close to MIC
Close to AP
***OPTION
SPKR_LP_CONN
SPKR_LN_CONN
SPKR_RP_CONN
SPKR_RN_CONN
PINE64
Pine64
Title
PineTab Schematic ver 1.2
Document Number
AUDIO
Size
A3
制作：
审核：
Rev
V1.2
Date: Tuesday, August 04, 2020
Sheet 16 of 16

T-CADD/USB

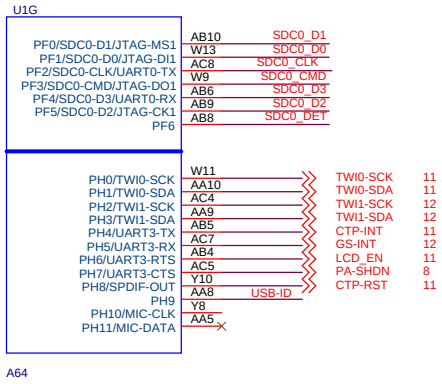

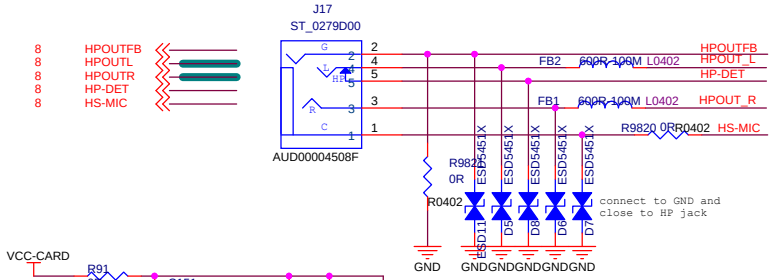

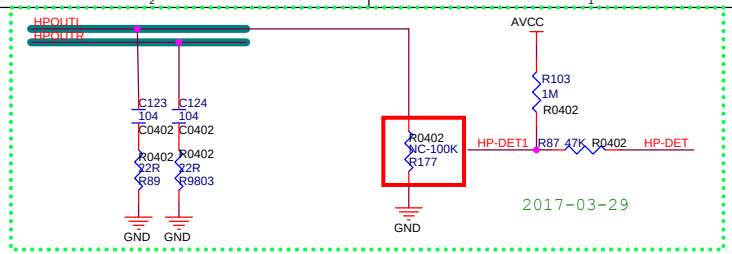

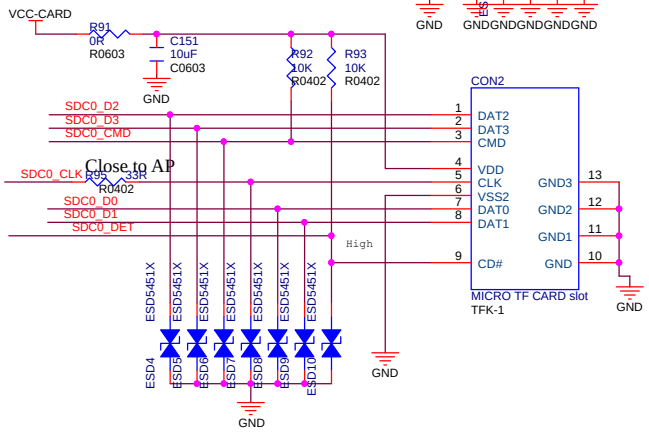

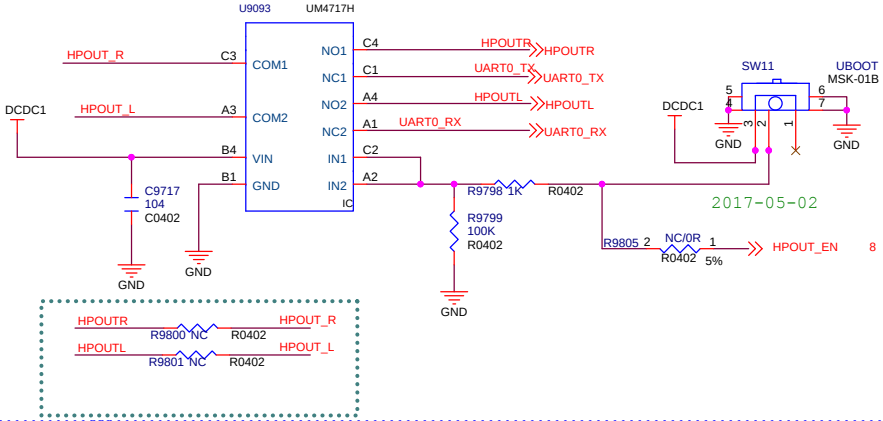

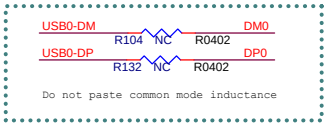

USB

Differential pairs
Z0= 90 ohm

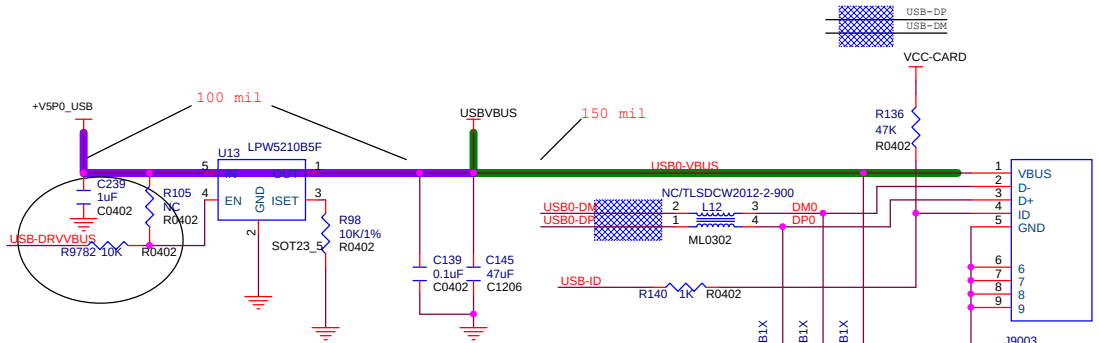

The ESD part's parasitic capacitance < 5pF.

PINE64	Pine64	
Title	PineTab Schematic ver 1.2	
Size A3	Document Number T-CARD/USB	Rev V1.2
制作：	审核：	
Date: Monday, November 25, 2019	Sheet 12 of 16	

CAMERA

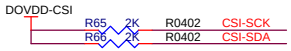

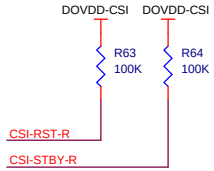

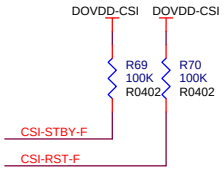

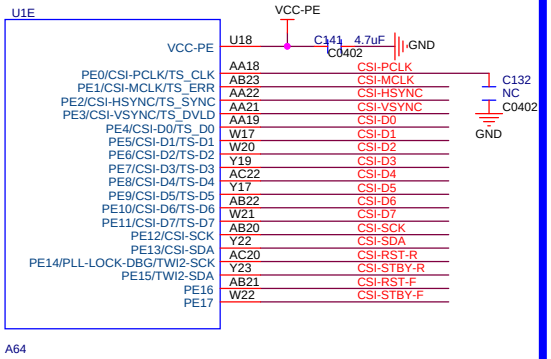

DVDD1V8-CSI =1.8V
DOVDD-CSI =2.8V
AVDD-CSI =2.8V

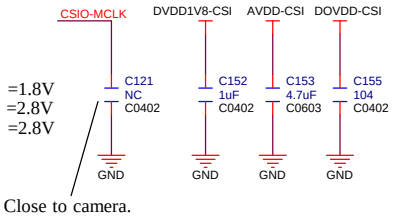

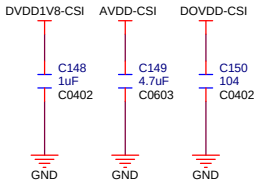

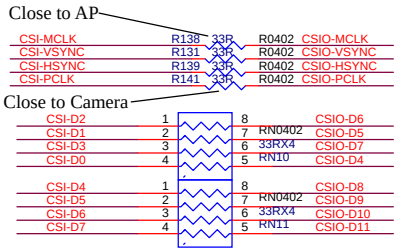

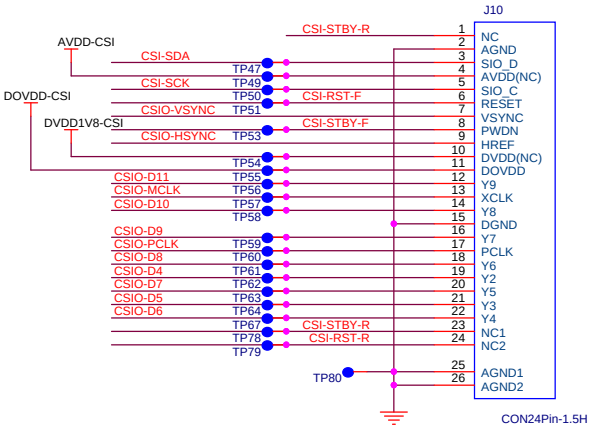

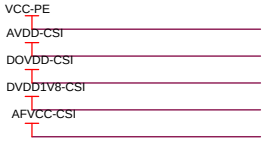

PINE64	Pine64		
	Title	PineTab Schematic ver 1.2	
	Document Number	CAMERA	
Size A3	制作：	审核：	Rev V1.2
Date: Monday, November 25, 2019	Sheet 10 of 16		

CTP

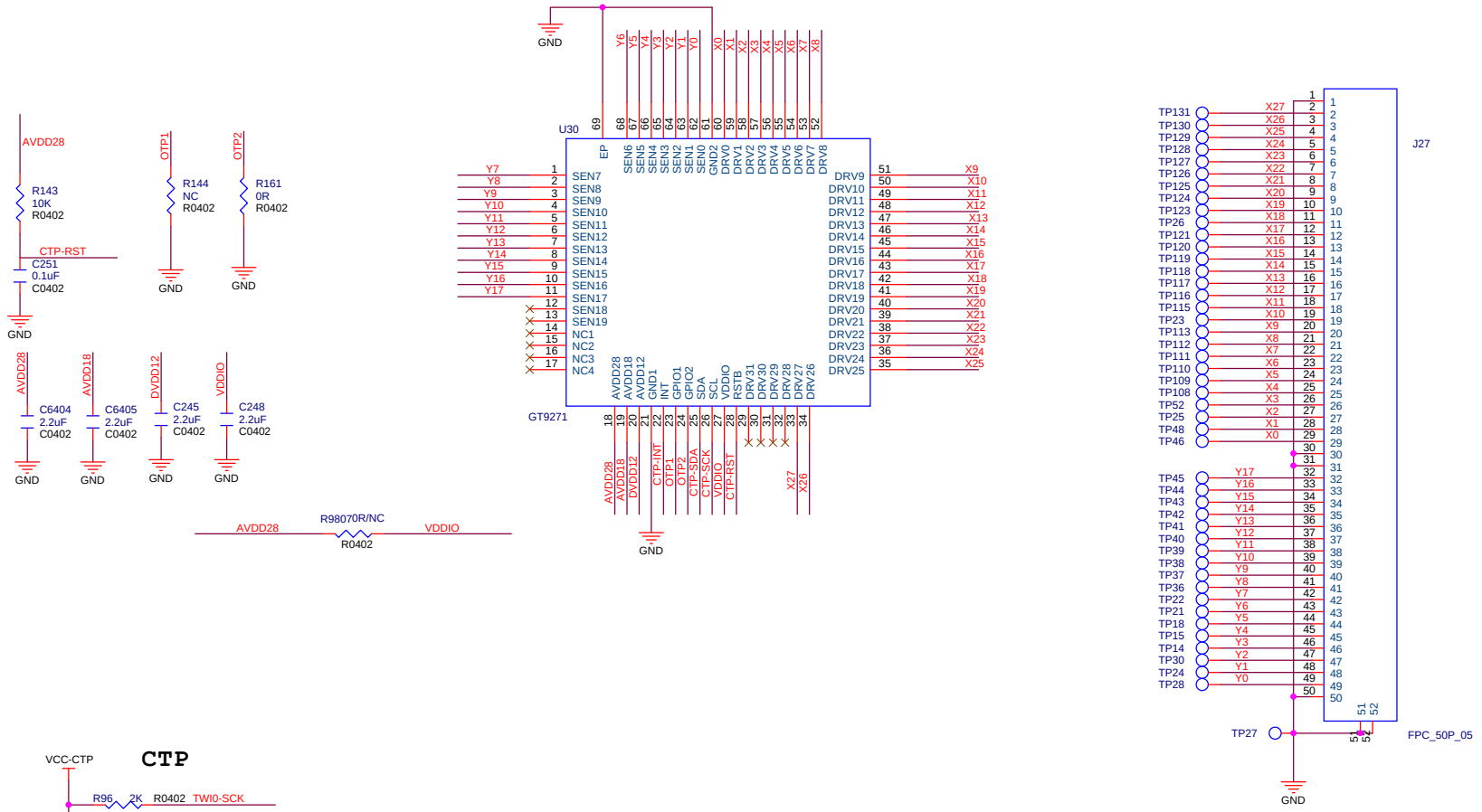

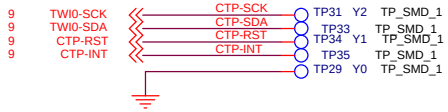

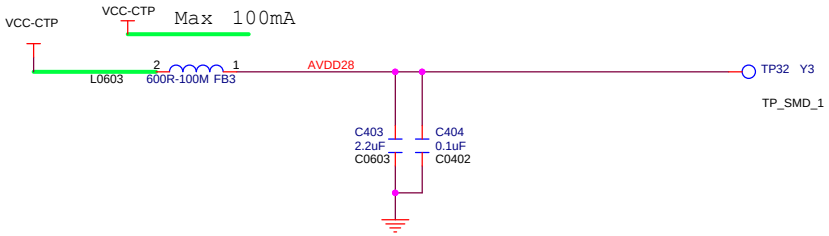

PINE64	Pine64		
	Title	PineTab Schematic ver 1.2	
	Document Number	CTP	
Size A3	制作：	审核：	Rev V1.2
Date: Monday, November 25, 2019	Sheet 15 of 16		

SENSORs/MT/KEY

SENSOR

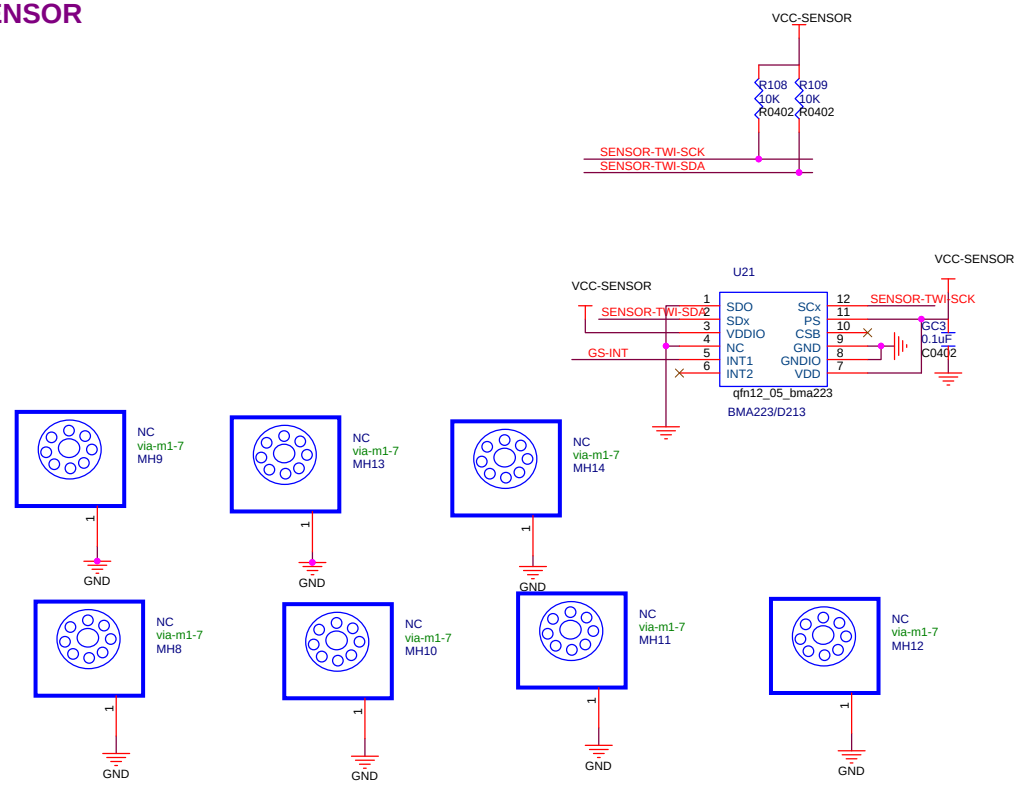

TWI1-SCK 9 SENSOR-TWI-SCK
TWI1-SDA 9 SENSOR-TWI-SDA
GS-INT 9 GS-INT

VCC-MT

VCC-SENSOR

KEY

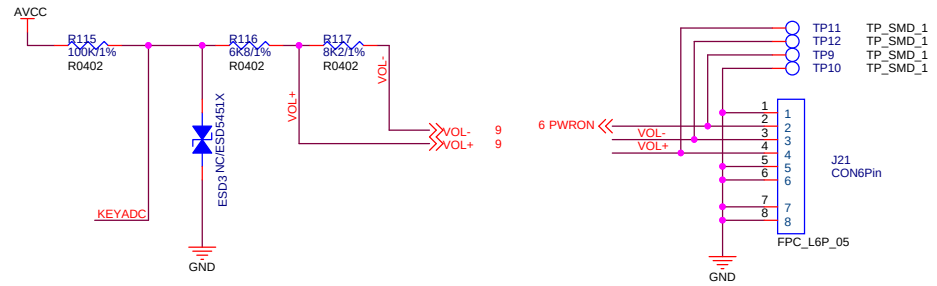

5 KEYADC

AVCC

PINE64	Pine64		
	Title	PineTab Schematic ver 1.2	
	Document Number	SENSOR/KEY	
Size A3	制作：	审核：	Rev V1.2
Date: Monday, November 25, 2019	Sheet 16 of 16		

MIPI

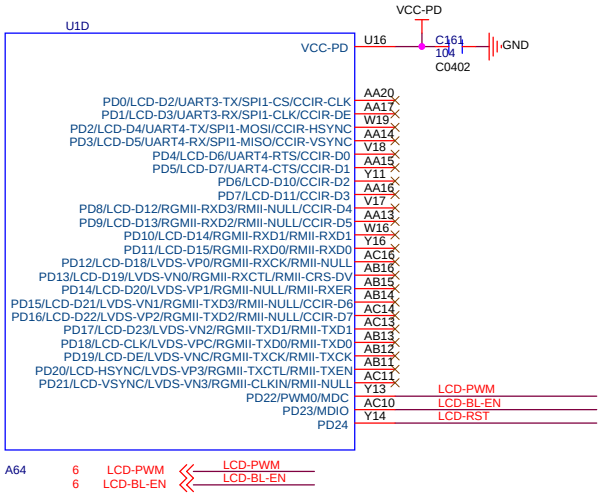

A64 6 LCD-PWM LCD-PWM
6 LCD-BL-EN LCD-BL-EN

11 MIPI-DSI-CKP DSI-CKP
11 MIPI-DSI-CKN DSI-CKN
11 MIPI-DSI-D0P DSI-D0P
11 MIPI-DSI-D0N DSI-D0N
11 MIPI-DSI-D1P DSI-D1P
11 MIPI-DSI-D1N DSI-D1N
11 MIPI-DSI-D2P DSI-D2P
11 MIPI-DSI-D2N DSI-D2N
11 MIPI-DSI-D3P DSI-D3P
11 MIPI-DSI-D3N DSI-D3N

PS
VCC-LCD

Differential pairs
Z0= 100 ohm

+V1P8A
C134
104
C0402
GND

2017-01-12

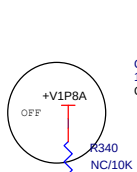

VCC-LCD
C516 1uF C0402 GND
C443 104 C0402 GND

J9
FPC_r40P_05
CON40P-05

TP-1MM TP122
LCD-RST R339 0R R0402
C442 NC/1.8K C0402 GND

DSI-D3P TP-1MM TP225
DSI-D3N TP-1MM TP180
DSI-D2P TP-1MM TP226
DSI-D2N TP-1MM TP227
DSI-CKP TP-1MM TP230
DSI-CKN TP-1MM TP231
DSI-D1P TP-1MM TP228
DSI-D1N TP-1MM TP229
DSI-D0P TP-1MM TP232
DSI-D0N TP-1MM TP233

+V1P8A
LCD-PWM1 R9745 NC/0R R0402 TP-1MM TP9839
TP-1MM TP239
LCD-BL-EN1 R9746 NC/0R R0402 TP-1MM TP9838
VLED- TP-1MM TP235
TP-1MM TP81 VSN
TP-1MM TP224 VSP
VLED+ TP-1MM TP238
TP-1MM TP237
GND

PS LCD-POWER

Back light

LCD-POWER
C355 10uF C0603 GND
C356 102 C0402
R8498 CH 0603 NC/0 5%
Q26 GN2305 SOT_23
R9675 100K R0402

9 LCD_EN
R183 1K R0402
Q28 MMBT3904 SOT_23
R184 100K R0402

4.7uH/3A/SMT5012
SML5012_1P2H
L2072
CR8201 1N5819 SOD123
VLED+

U8201
SS6635STR
VIN LX EN VOUT FB GND
IC

C8205 10UF 30% 6.3V X5R 0603
MPN:WPN252010H4R7MT
R9774 R0603 5% 0R
R9775 CH NC/0R R0402 5%
R9777 NC/0R CH 5% R0603
R9776 0R CH 5% R0603
C8207 47UF/50V 20% 25V X5R 0805
R9778 CH 1% NC/150K-1% R0402 2016-12-13
C9706 22PF
R9780 1% 2.7K/1% R0402
VLED-
R8414 4.7K 0402 5% EMPTY LCD-BL-EN1 6 LCD-BL-EN
R8248 5% CH 100K R0402
R9779 1% CH NC/10K-1% R0402
R8416 1.2R 1% CH R0603
FB:0.6V Vout=0.6*(1+R9778/R9779)
Imax:0.8A
2016-12-13

USE EDP panel :
R9774 R9775 R9776 R9780 NC
R9777=0R R9778=470K R9779=20K
C9706=22PF C8207=22UF

VCC-LCD
R238 4K7 R0402
LCD-PWM
R67 0R/1% LCD-PWM1 R0402 2016-12-13
R111 4K7/1% R0402
HR22 33K/1% R0402
C181 10uF C0805

PINE64
Pine64
Title PineTab Schematic ver 1.2
Document Number MIPI-LCD
Size A3
制作： 审核：
Rev V1.2
Date: Monday, November 25, 2019
Sheet 16 of 16

DIGITAL VIDEO

Differential pairs
Z0= 100 ohm

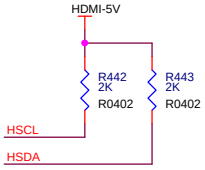

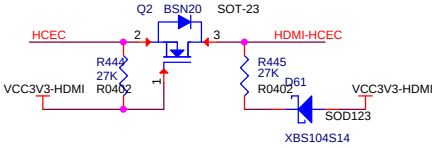

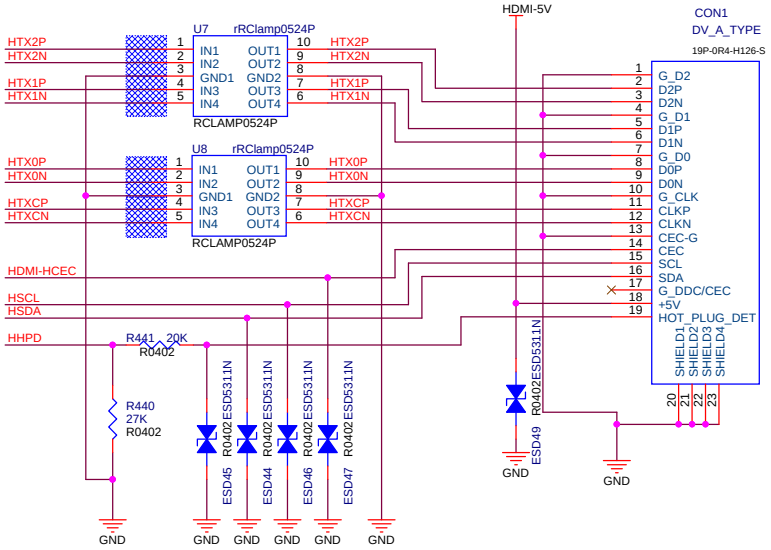

PINE64	Pine64		
	Title	PineTab Schematic ver 1.2	
	Document Number	DIGITAL VIDEO	
Size A3	制作：	审核：	Rev V1.2
Date: Monday, November 25, 2019	Sheet 16 of 16		

RTL8703AS/8723BS-COB

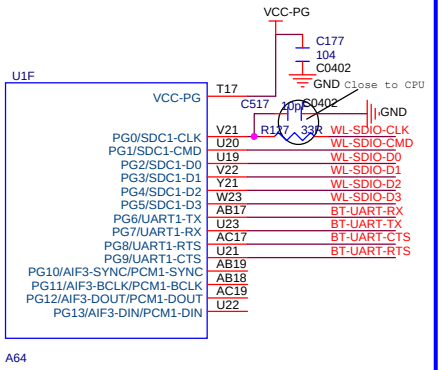

VCC-WIFI-IO

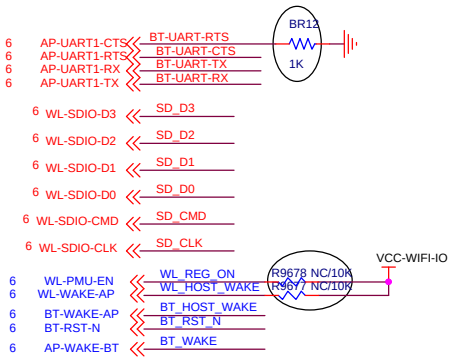

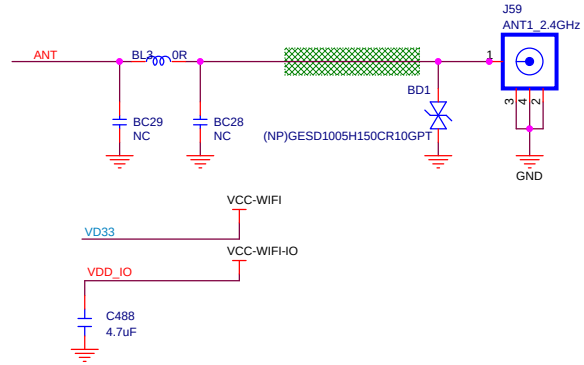

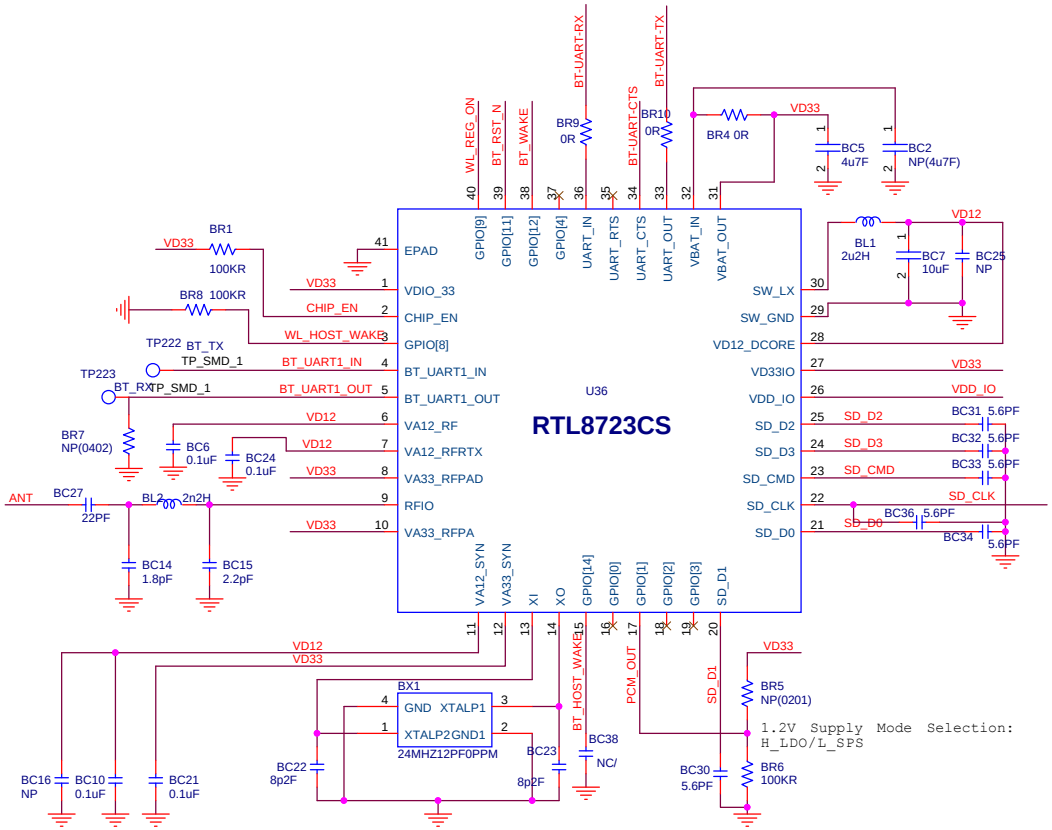

GPIO[8]/EXT_WOL/WL_WAKE_HST/WL_LED/BT_LED/ANTSEL2/ SD_OB_INT

BT_UART1_IN/BT_3DD_SEL/BT_GPIO/BT_LED/ ANTSEL1/ANTSEL1

BT_UART1_OUT/BT_3DD_SYNC/BT_GPIO/(WL_WAKE_HST)/TEST_MD_SEL/ANTSEL0

GPIO[9]/WL_DISn/EXT_WOL0

GPIO[11]/BT_DISn/ BT_EXT_WOL

GPIO[12]/HST_WAKE_DEV/LTE_COEX/FM_I2S_SDOUT/WPS

GPIO[4]/EEPROM_SEL/WL_LTE_UART_OUT/BT_GPIO(BT_WAKE_HST)/FM_I2S_WS/FM_I2C_SDA

GPIO[14]/DEV_WAKE_HST/(WL_WAKE_HST)

GPIO[0]/ICFG0/BT_GPIO0/PCM_IN

Supply Voltage Options

Part	VBAT==3.3V	VBAT=3.3~5.5V(Battery)
BR4	0R	NP
BR1	100KR	NP(CHIP_EN: Off Module Pull High)
BC2	NP	4.7uF

PINE64	Pine64	
Title	PineTab Schematic ver 1.2	
Document Number	WIFI+BT	
Size A3	制作：	审核： Rev V1.2
Date: Monday, November 25, 2019	Sheet 16 of 16	

USB HUB

VCC-3V3

Vout = 0.6*(1+R1/R2)=3.25V

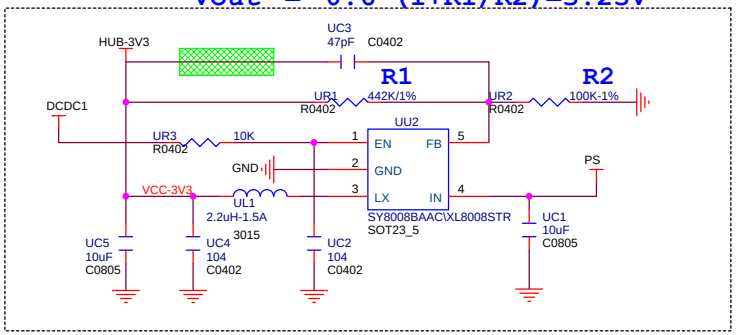

Differential pairs

Z0= 90 ohm +/-5 ohm

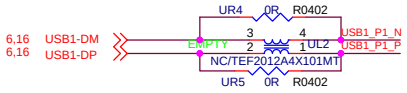

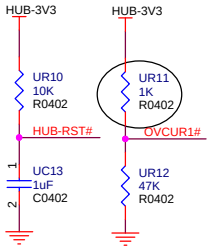

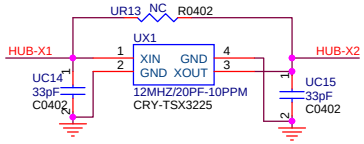

USB HUB_USB_CONN

USB HUB

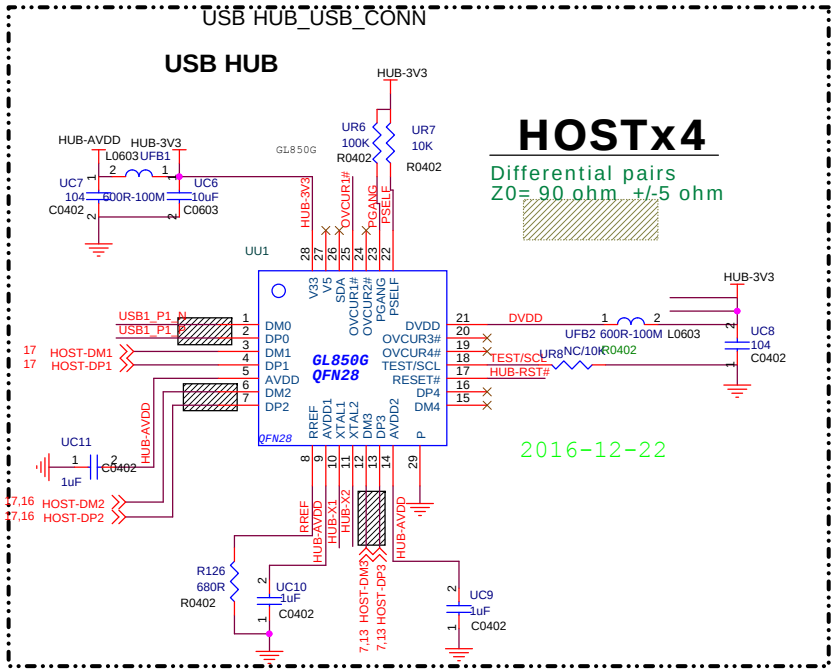

HOSTx4

Differential pairs

Z0= 90 ohm +/-5 ohm

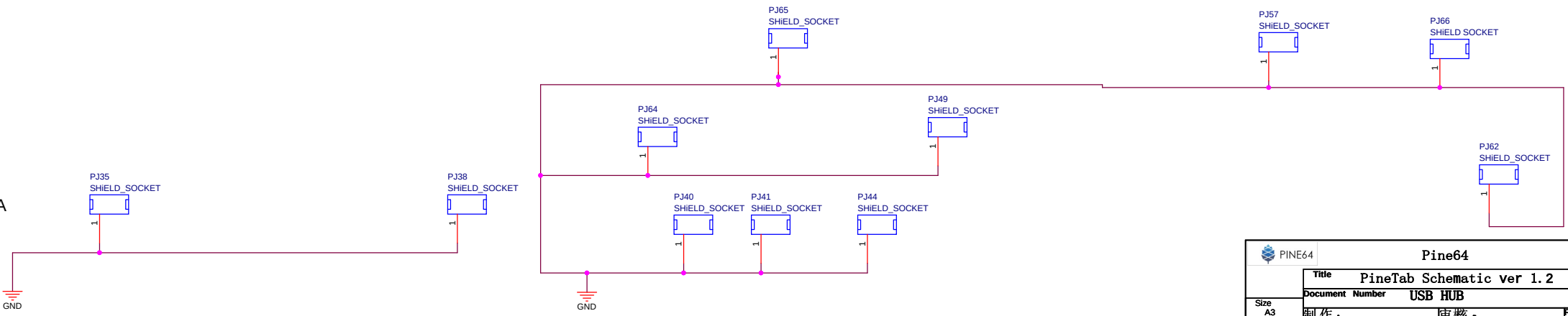

PINE64	Pine64	
Title	PineTab Schematic ver 1.2	
Document Number	USB HUB	
Size A3	制作：	审核： Rev V1.2
Date: Monday, November 25, 2019	Sheet 16 of 16	

USB HOST

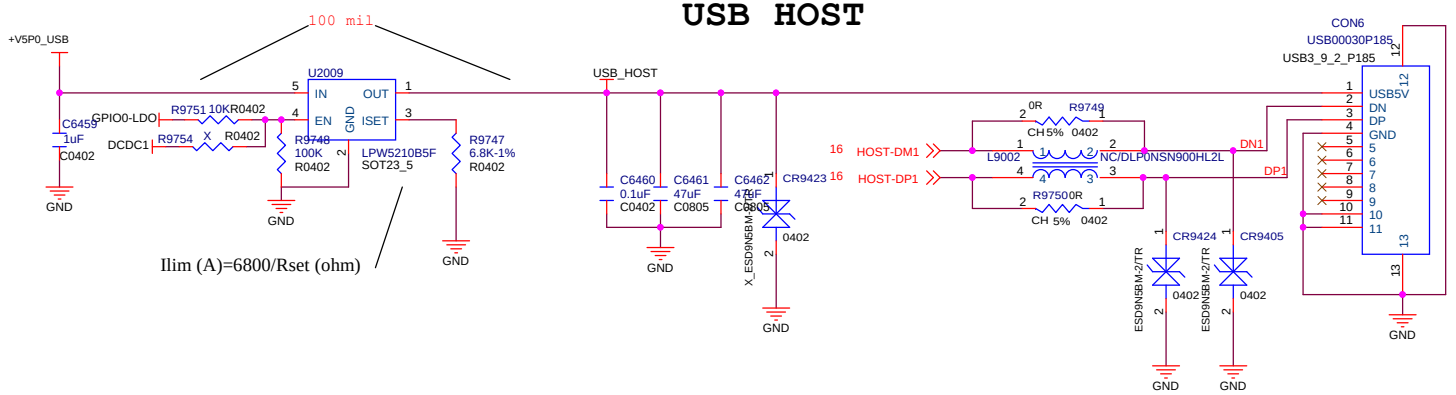

DOCKING

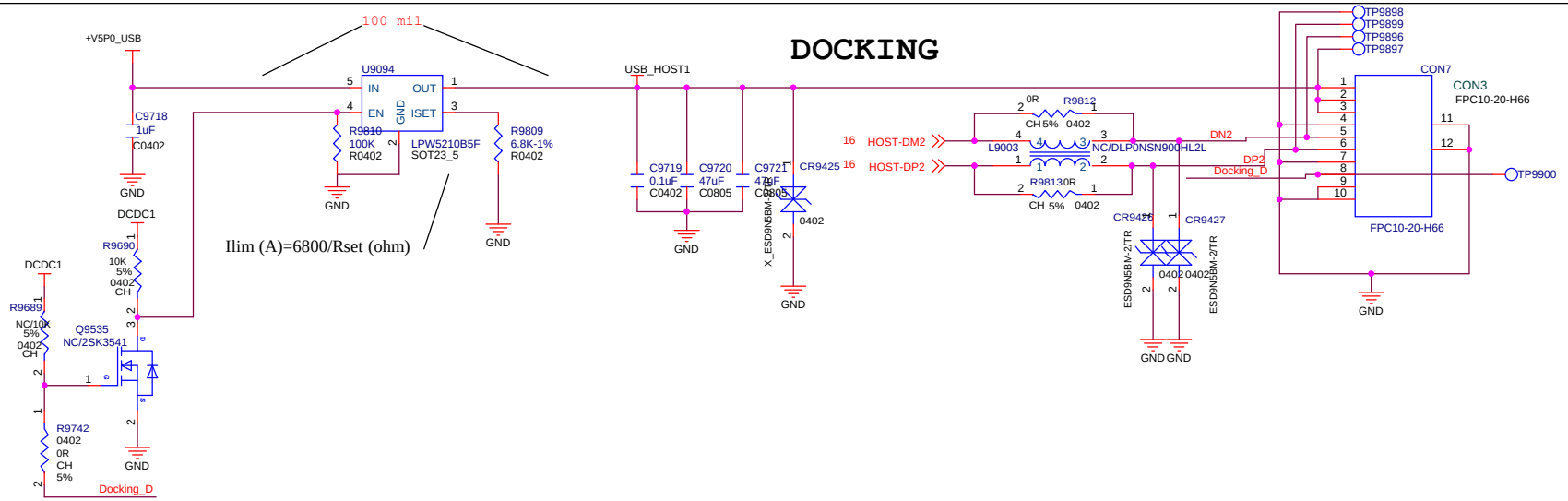

USB Port

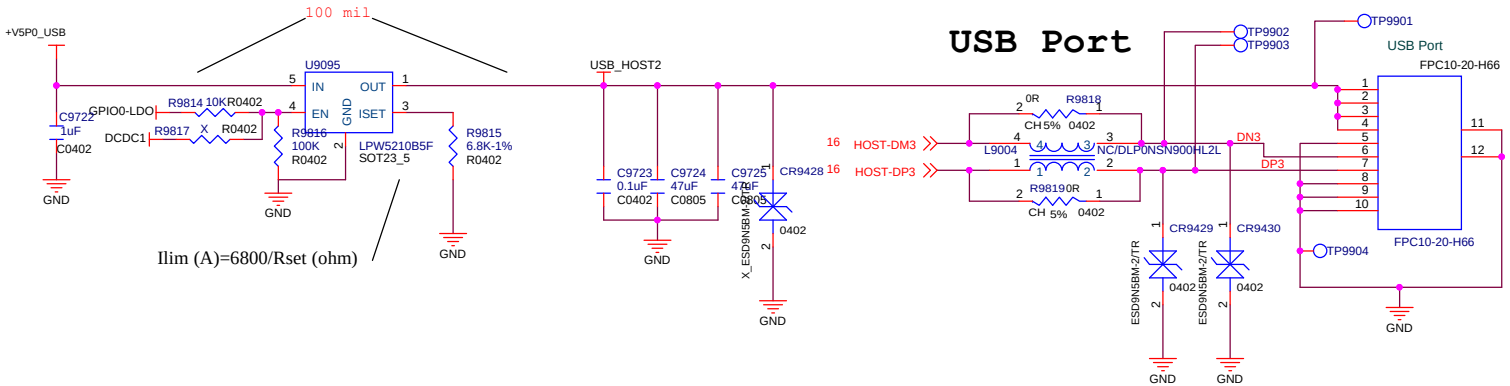

PINE64	Pine64	
Title	PineTab Schematic ver 1.2	
Document Number	INTERNAL USB PORT	
Size A3	制作：	审核： Rev V1.2
Date: Friday, November 29, 2019	Sheet 16 of 16	