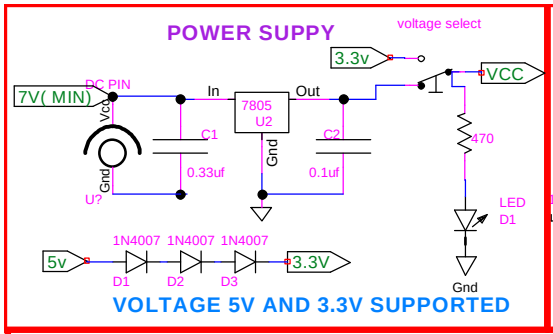

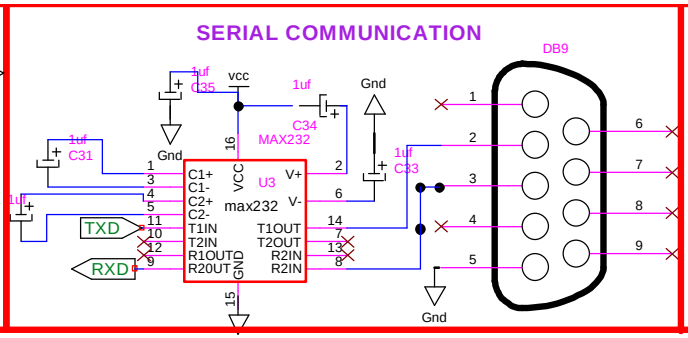

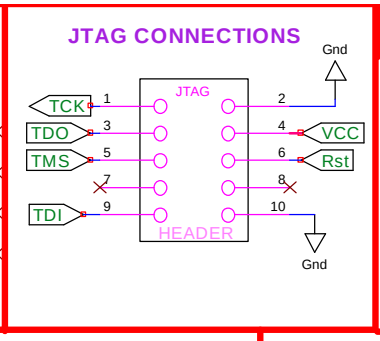

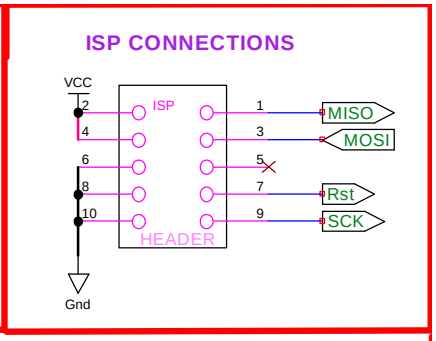

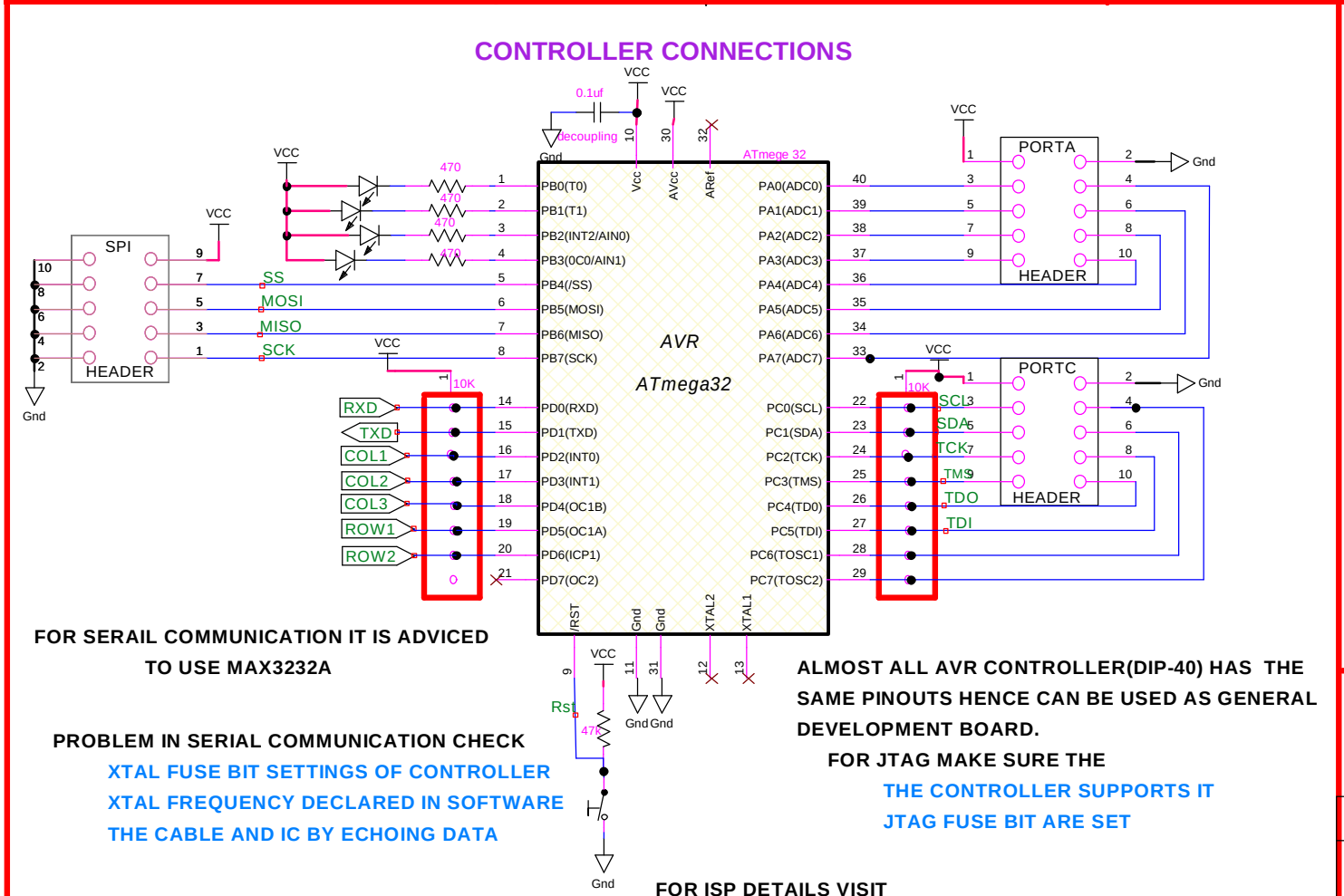

FOR SERAIL COMMUNICATION IT IS ADVICED TO USE MAX3232A

PROBLEM IN SERIAL COMMUNICATION CHECK

XTAL FUSE BIT SETTINGS OF CONTROLLER

XTAL FREQUENCY DECLARED IN SOFTWARE

THE CABLE AND IC BY ECHOING DATA

ALMOST ALL AVR CONTROLLER(DIP-40) HAS THE SAME PINOUTS HENCE CAN BE USED AS GENERAL DEVELOPMENT BOARD.

FOR JTAG MAKE SURE THE

THE CONTROLLER SUPPORTS IT

JTAG FUSE BIT ARE SET

FOR ISP DETAILS VISIT

http://www.vignesh.byethost4.com/isp.html

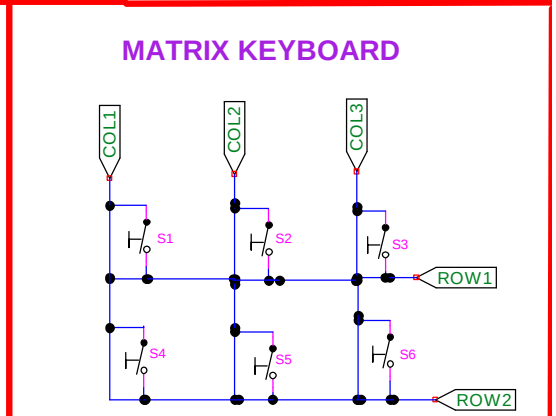

THE MATRIX KEYBOARD IS LIKE ANY SUCH CONVENTIONAL KEYBOARDS

USE ROW OR COLUMN KEY SCANNING

FOR DETAILS REFER THE SITE

http://www.dribin.org/dave/keyboard/html/

NOTE :-EXTERNAL PULLUPS PROVIDED FOR I2C AND KEYBOARD

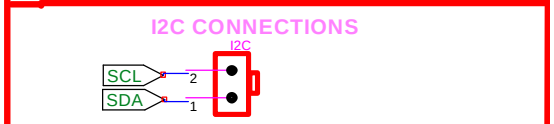

Title AVR DEV board		
Author Pradheep TCE(SMART HOME)		
File E:\SmartHome\schematic\avrdevboard1.0.dsn		Document 1
Revision 1.0	Date 18/12/07	Sheets 1 of 1