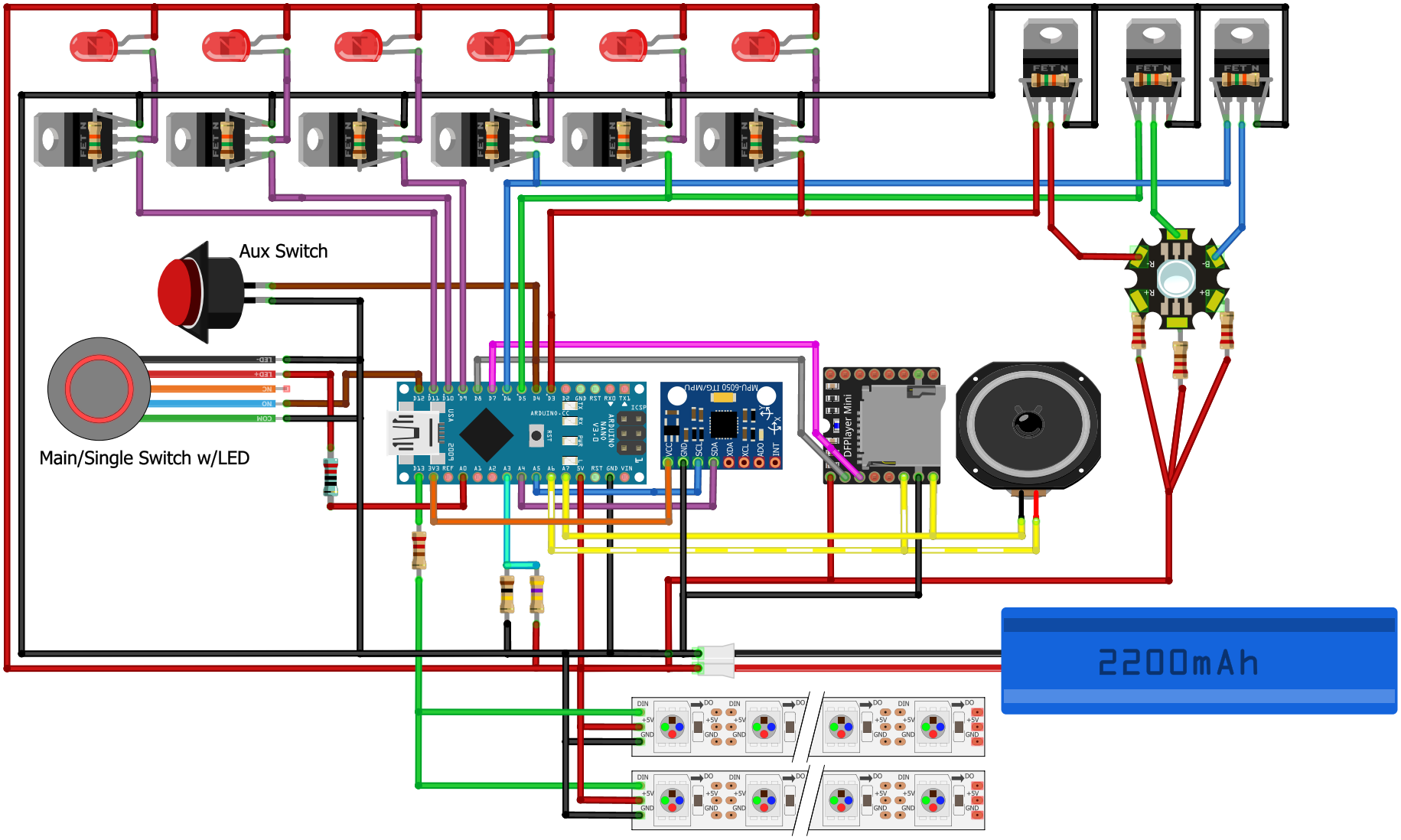
Aux Switch
Main/Single Switch w/LED
DFPlayer Mini
2200mAh
fritzing

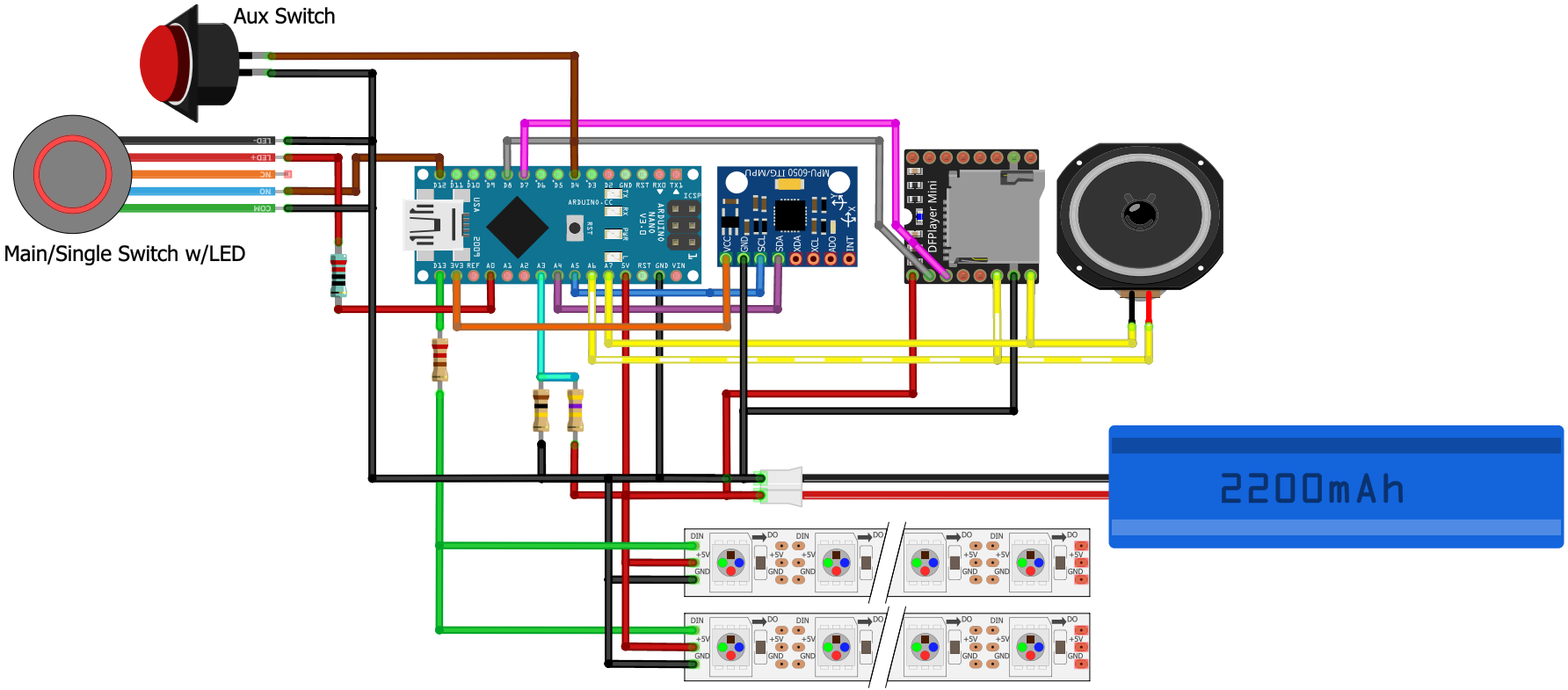
Aux Switch
Main/Single Switch w/LED
LED-
LED+
NC
NO
COM
DFPlayer Mini
2200mAh
DIN
DO
+5V
GND

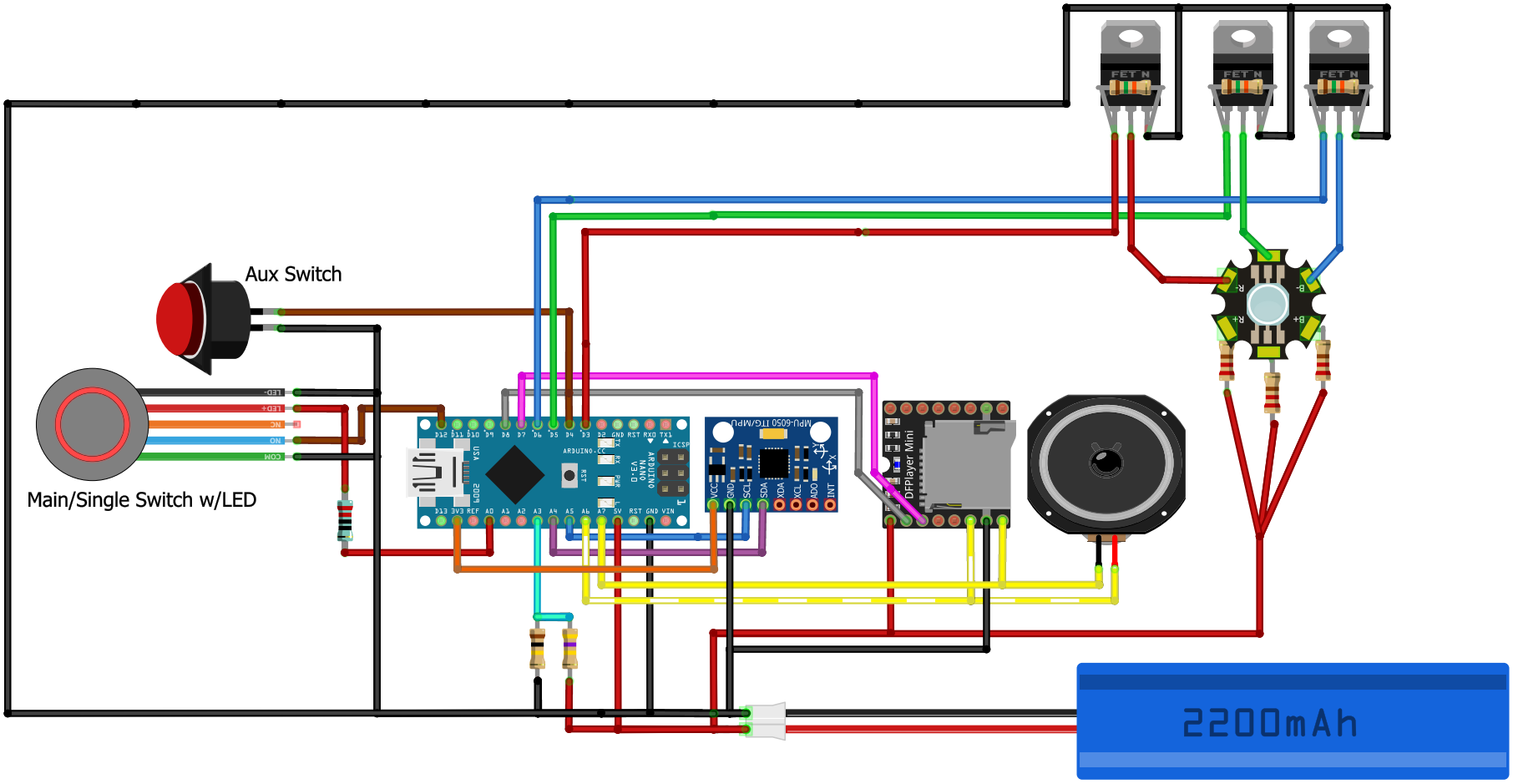
Aux Switch
Main/Single Switch w/LED
LED-
LED+
NC
NO
COM
FET N
FET N
FET N
R-
B-
R+
B+
DFPlayer Mini
MPU-6050 ITG/MPU
VCC
GND
SCL
SDA
XDA
XCL
ADO
INT
2200mAh

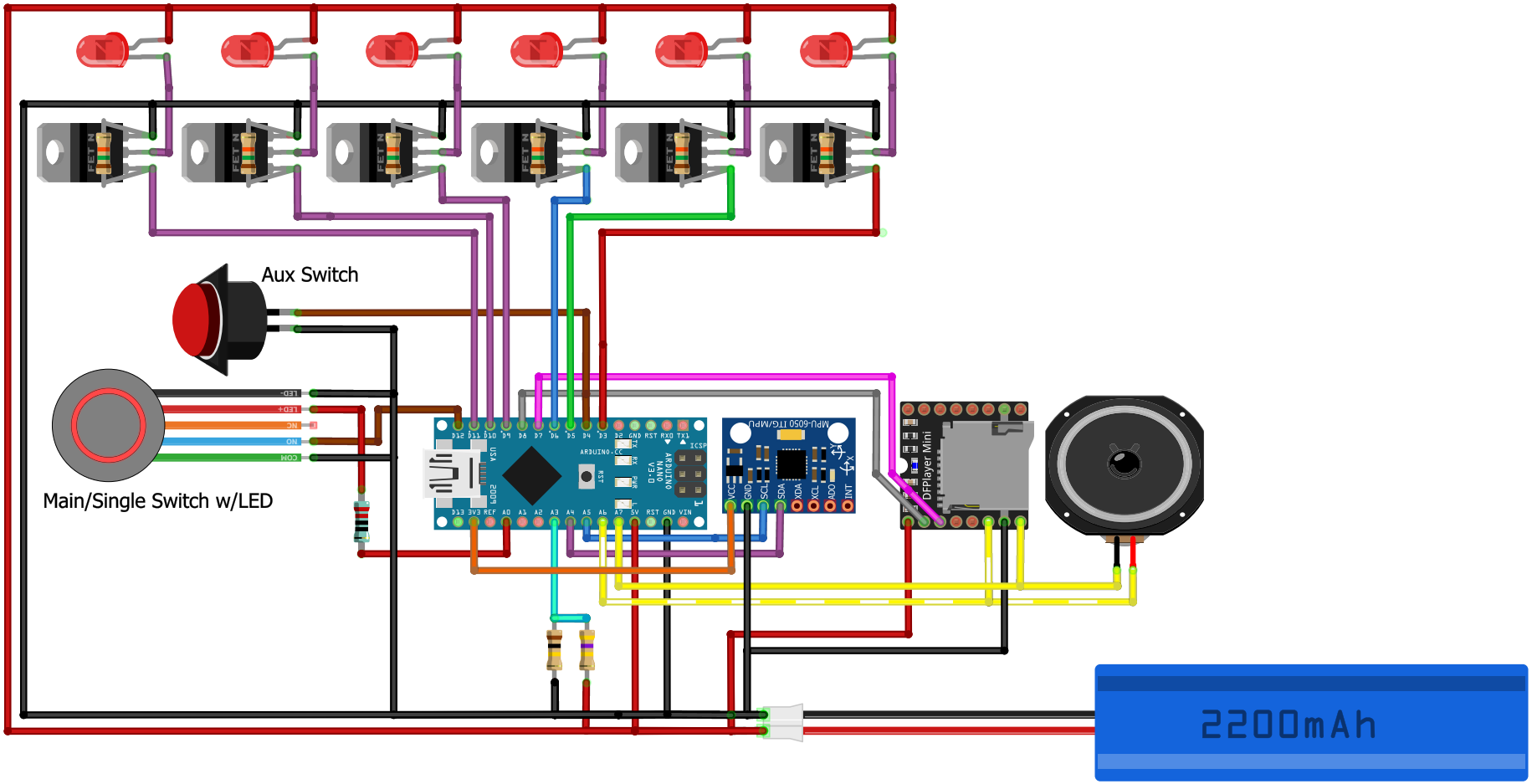
Aux Switch
Main/Single Switch w/LED
LED-
LED+
NC
NO
COM
DFPlayer Mini
2200mAh

fritzing