MGMT

MGMT CPU

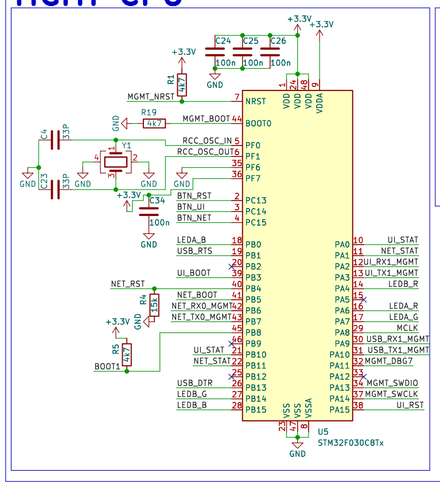

MGMT LED

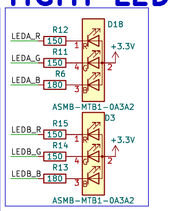

MGMT SW

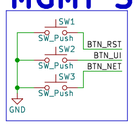

NET

NET CPU

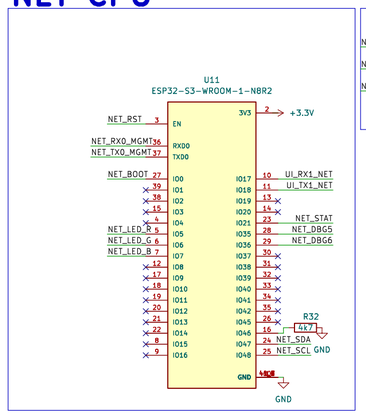

NET LED

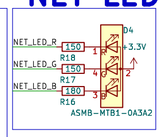

UI

UI CPU

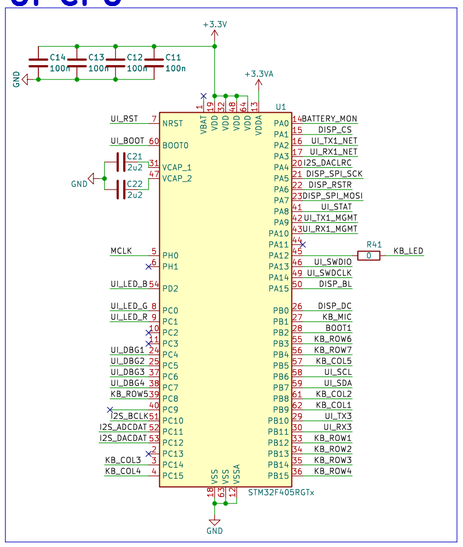

UI LED

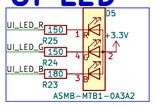

POWER

Power Regulator

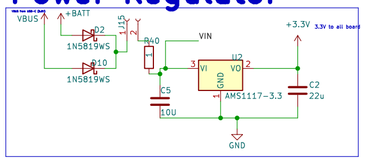

BATT CHIP

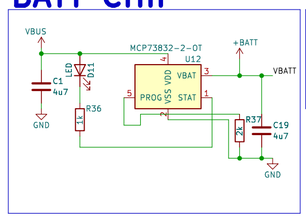

VBATT

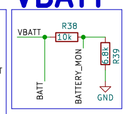

ANALOG

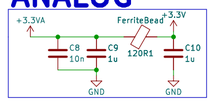

AUDIO

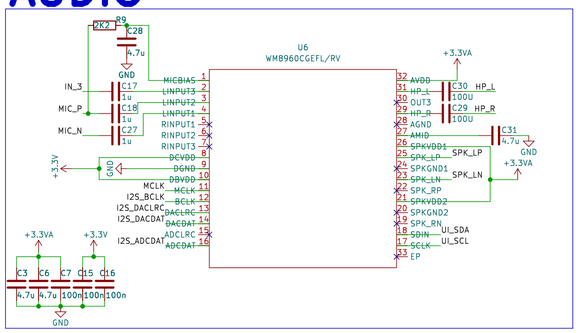

USB

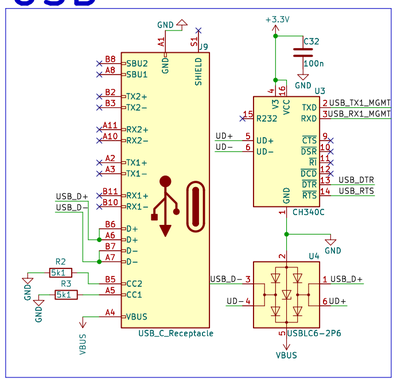

I2C BUS

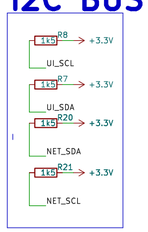

CONNECTORS

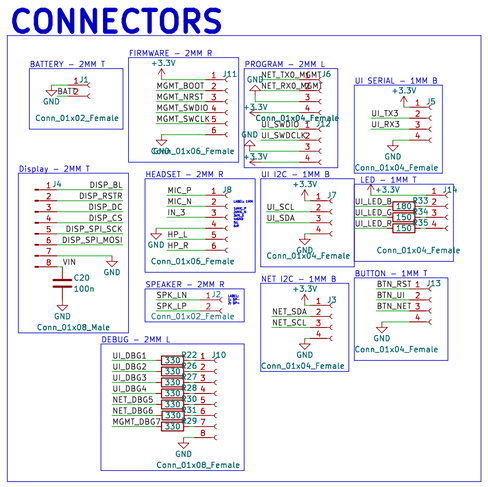

EEPROM

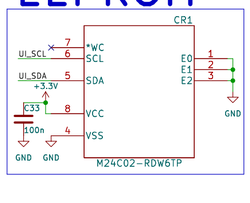

Keyboard

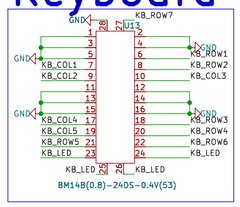

NOTES

EV9 layer build up:
top: High Speed
second: GND
third: 3.3V
bottom: Low Speed

CISCO SYSTEMS	
Sheet: /	
File: EV9 Board Design.kicad_sch	
Title: EV8 – FINN BERG	
Size: A2	Date: 2023-06-21
KiCad E.D.A. kicad 7.0.5	Rev: Id: 1/1