MGMT

MGMT CPU

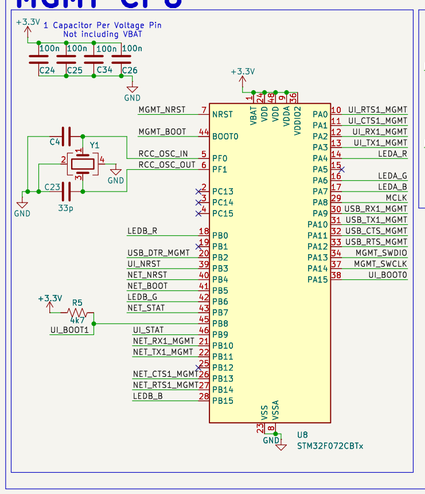

MGMT LED

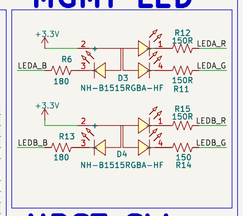

NRST SW

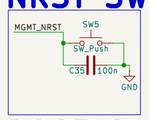

BOOT SW

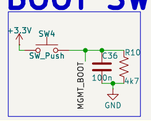

NET

NET CPU

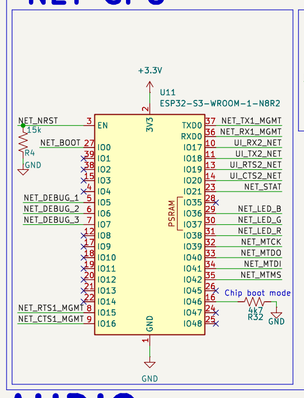

NET LED

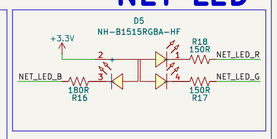

UI

UI CPU

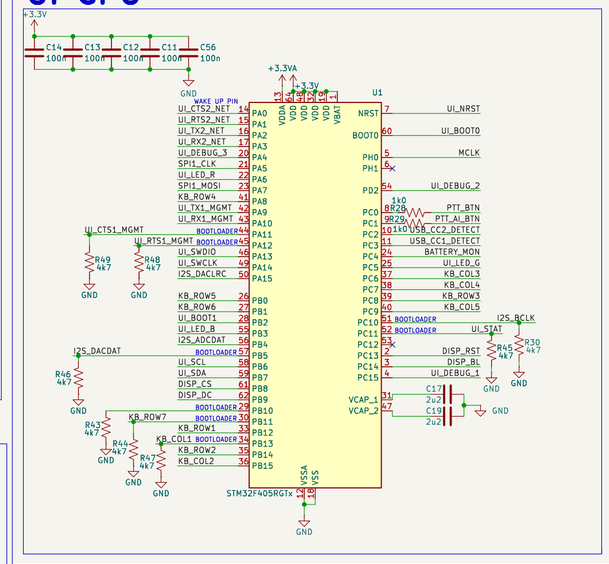

UI LED

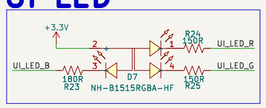

PTT

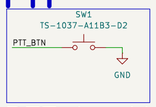

PTT to AI

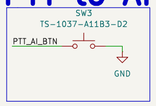

AUDIO

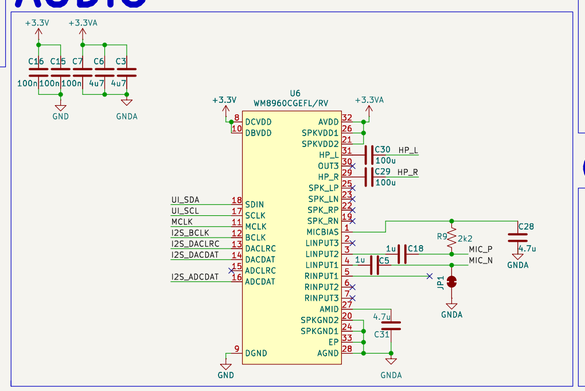

CONNECTORS

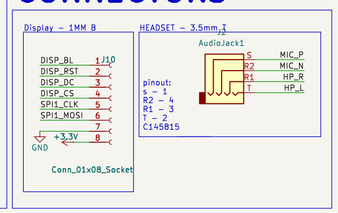

Debug

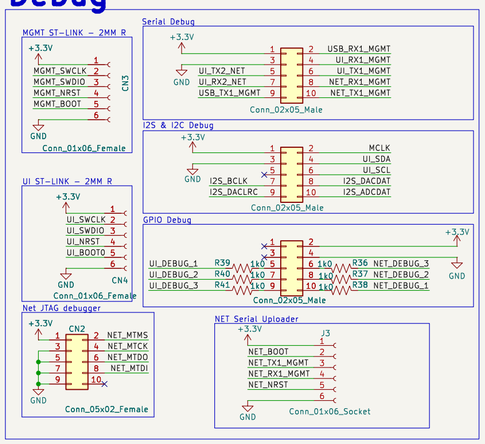

EEPROM

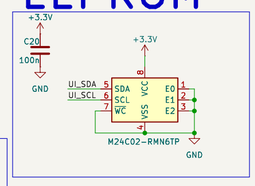

Keyboard

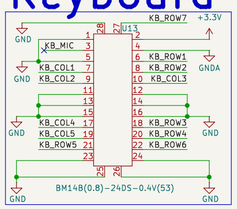

USB

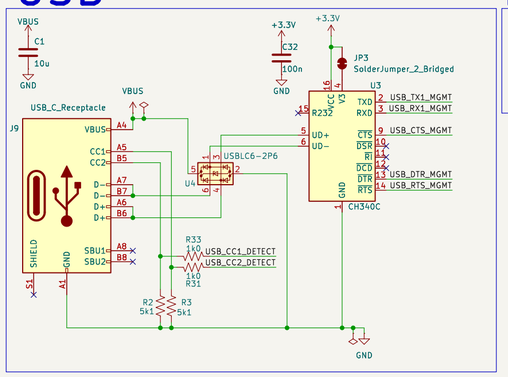

I2C BUS

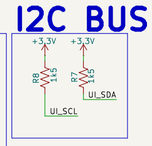

POWER

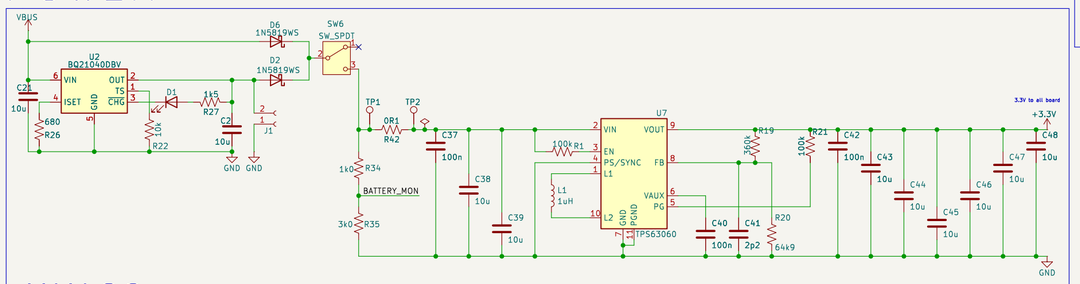

ANALOG

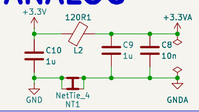

NOTES

EV11 layer build up:
top: High Speed
second: GND
third: 3.3V
bottom: Low Speed

CISCO SYSTEMS INC	
Sheet: /	
File: EV13 Board Design.kicad_sch	
Title: EV13 FINN BERG & BRETT REGNIER	
Size: A2	Date: 2024/07/19
KiCad E.D.A. 8.0.9	Rev:
	Id: 1/1