# MGMT

## MGMT CPU

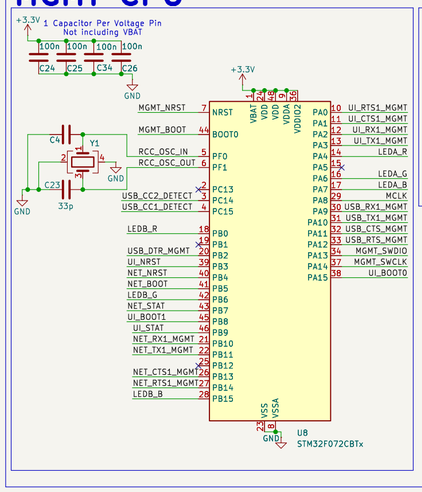


## MGMT LED

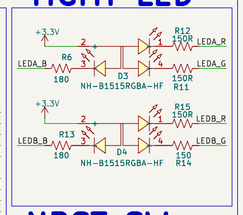


## NRST SW

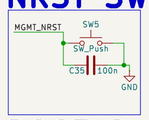

## BOOT SW

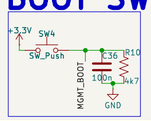

# NET

## NET CPU

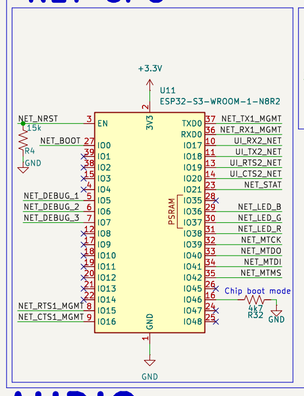


## NET LED

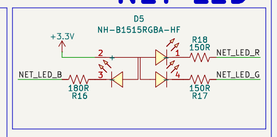


# UI

## UI CPU

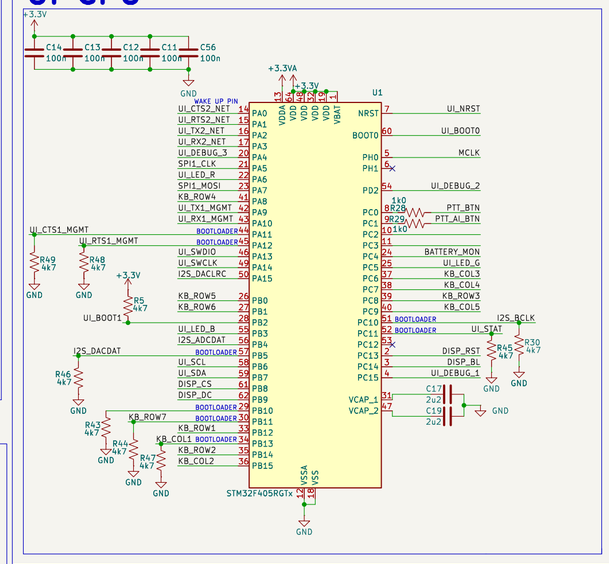


## UI LED

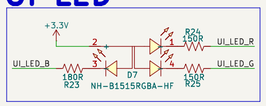


## PTT

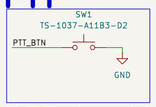


## PTT to AI

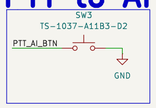


# USB

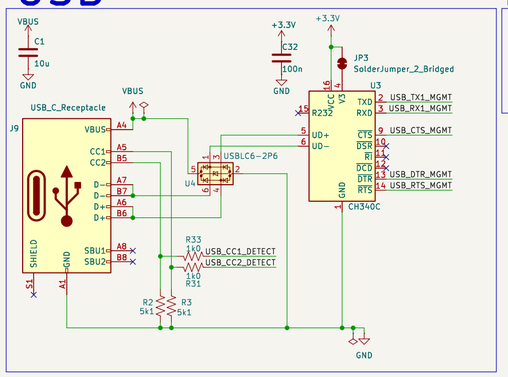


# I2C BUS

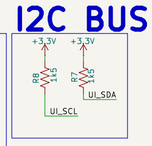

# AUDIO

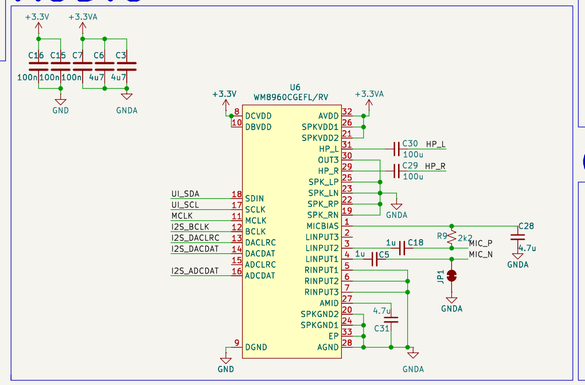


# CONNECTORS

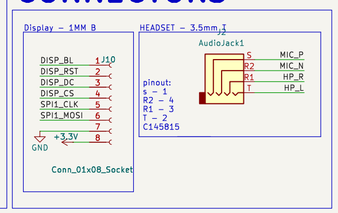


# Debug

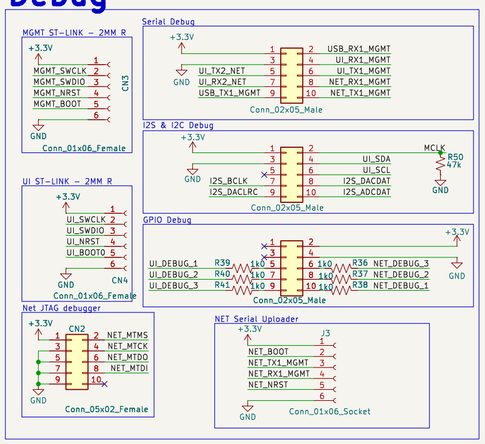


# EEPROM

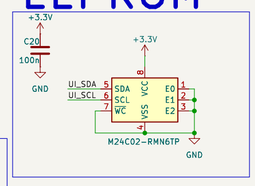


# Keyboard

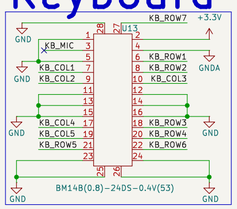


# POWER

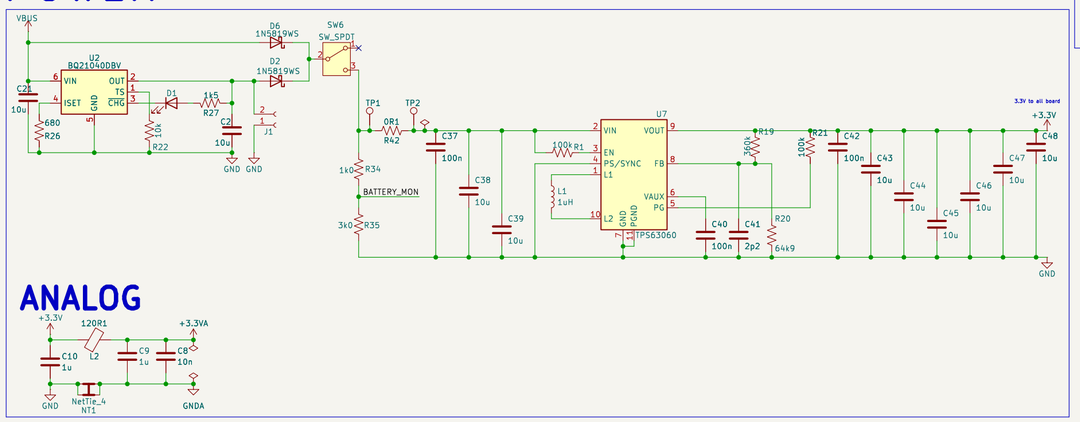


# ANALOG



# NOTES

EV11 layer build up:
top: High Speed
second: GND
third: 3.3V
bottom: Low Speed

| | |
|---|---|
| CISCO SYSTEMS INC | |
| Sheet: / | |
| File: EV13 Board Design.kicad_sch | |
| **Title: EV13 FINN BERG & BRETT REGNIER** | |
| Size: A2 | Date: 2024/07/19 |
| KiCad E.D.A. 8.0.9 | Rev: |
| | Id: 1/1 |