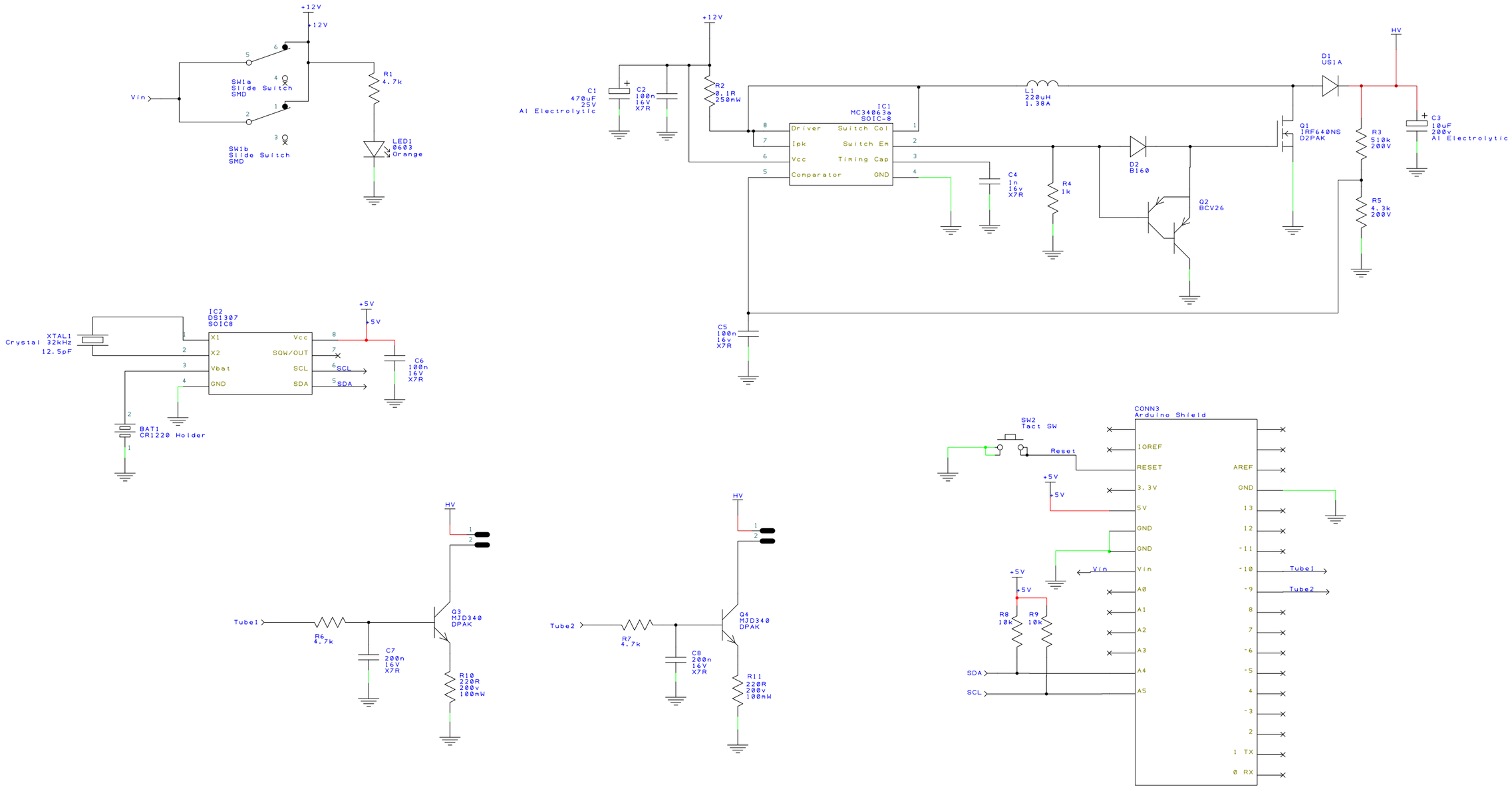

RCS www.RobinSterling.com	REF:	DRAWN: RCS 2018-5-10	CHECKED: -
	TITLE: IN9 Nixie Bargraph Arduino Shield		