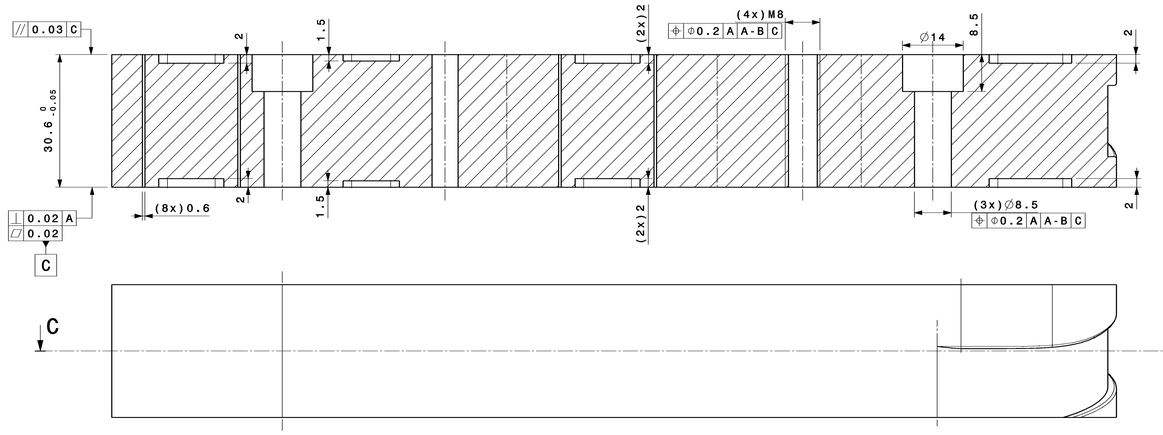

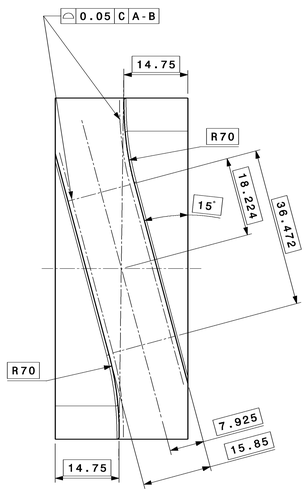

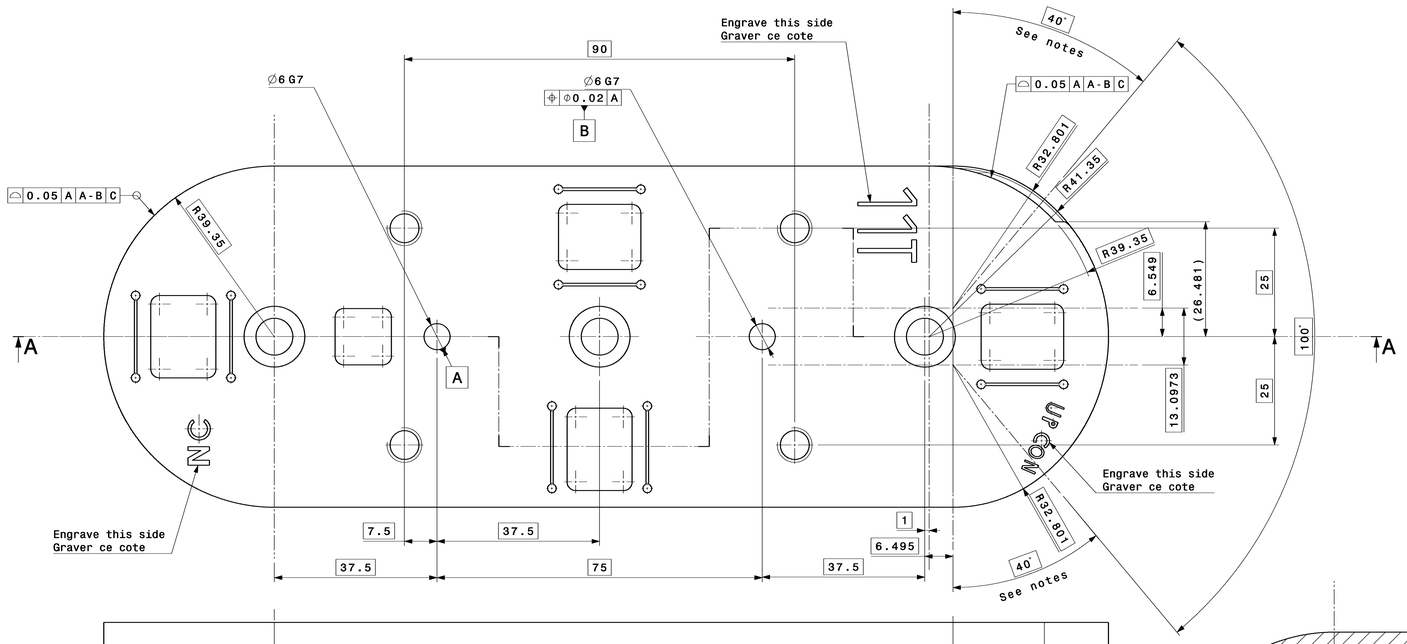

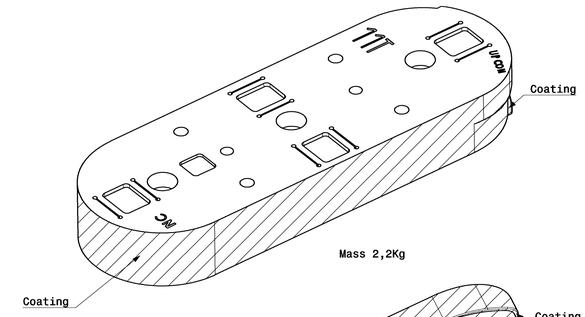

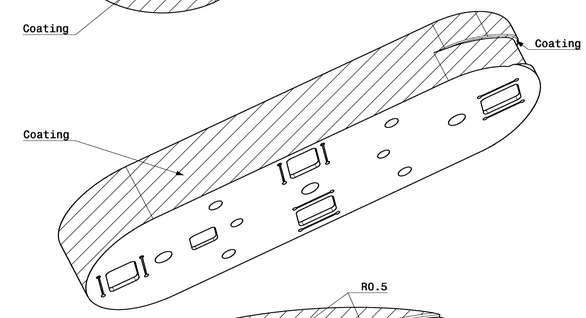

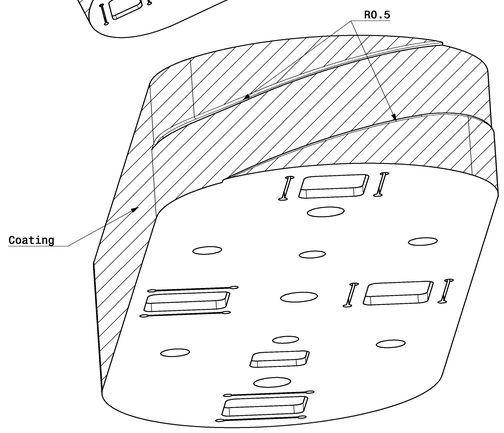

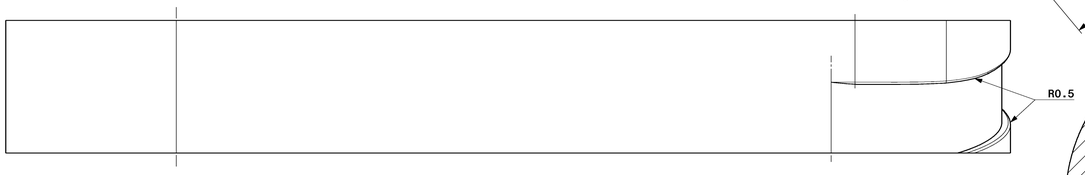

Section view C-C
Scale: 2:1

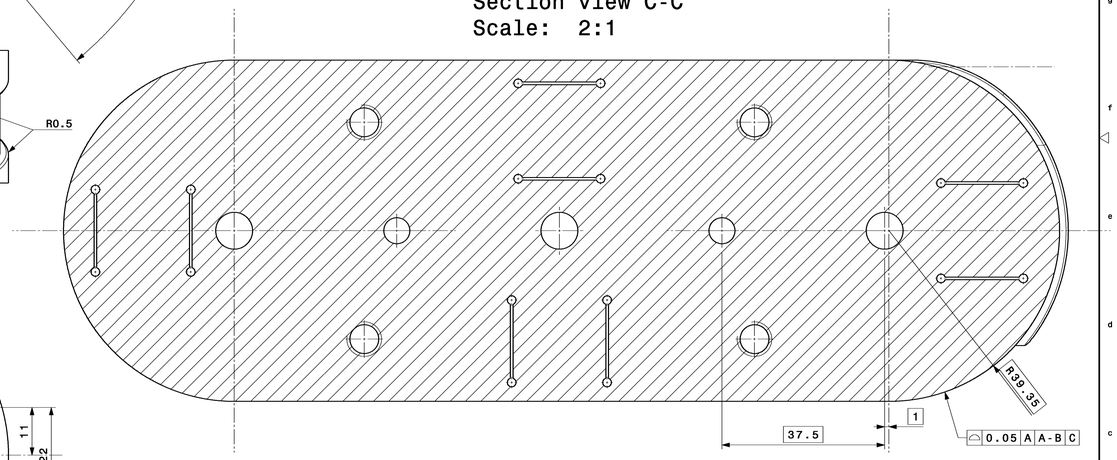

Detail B
Scale: 10:1

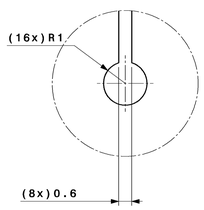

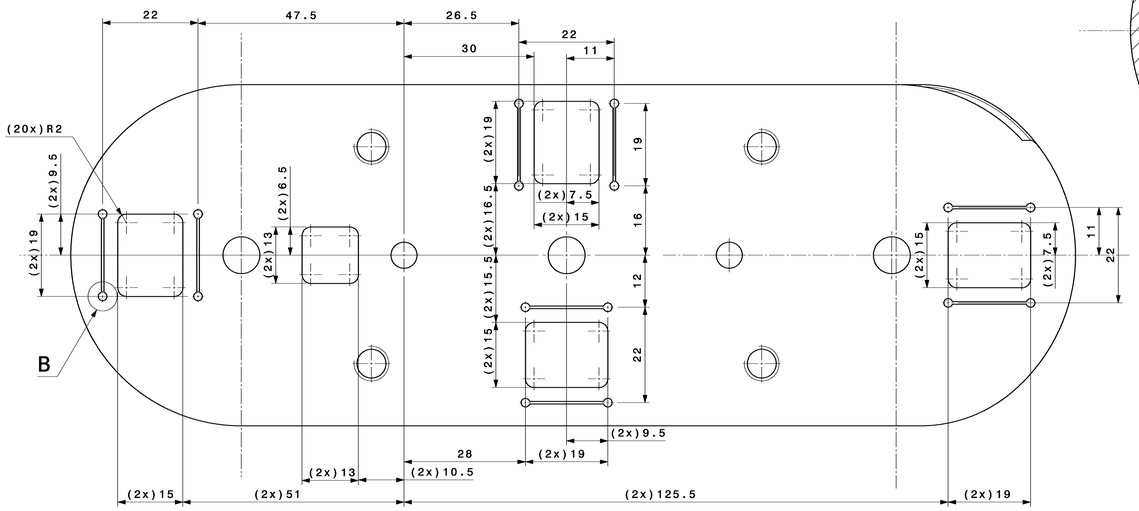

NOTES : DIMENSIONS R32.801 APPLY IN THE 40° SECTORS
DIMENSIONS R41.35 APPLY IN THE 100° SECTOR.

TRANSITIONS BETWEEN AND BEYOND ABOVE DIMS ARE SMOOTH AND TANGENTIAL.

THIS PART IS REPRESENTED WITH Al2O3 Plasma coating THK 0.2mm.
OPEN HFMSMC110012 TO SEE THIS PART WITHOUT COATING.

Dimensions are valid after coating.

QUA	DESCRIPTION	POS	MAT.	OBSERVATIONS	REF.CERN
1		1	Titanium	TAKE HFMSMC110012	

ENS/ASS — S.ENS/S.ASS

ISO 2768-mK — Ra 3.2 — ISO 13715 -0.2 +0.05

DRAWN IN accordance with ASME Y14.5 and ISO GPS TECHNICAL PRODUCT DOCUMENTATION

DES/DRA.	J. HUMBERT	2011-12-08
CONTROLLED	T. SANNER	2011-12-08
RELEASED	J. PEREZ	2011-12-08
APPROVED		

SPACER FOR COIL 11T
CENTRAL POST
ESPACEUR POUR LA BOBINE 11T
POLE CENTRALE

SCALE 2:1

CAD Document Number: ST0375024_02

REPLACES

RELEASED BY: PROJECT ENGINEER — FOR PRODUCTION — MAT. – — HFMSMC110003 — SIZE 0 — IND.

DESIGN, MODELING, TOLERANCES AND DRAWING ACCORDING TO CERN STANDARDS

DRAWING, MODELING, TOLERANCES ACCORDING TO ISO STANDARDS

PROJECTION

GRAVURE, MARQUAGE, MARQUAGE LASER, ETIQUETTE, ETIQUETTE ADHESIVE, ETIQUETTE ADHESIVE GENEVE

EUROPEAN ORGANIZATION FOR NUCLEAR RESEARCH
ORGANISATION EUROPEENNE POUR LA RECHERCHE NUCLEAIRE
GENEVE

CERN

THIS DOCUMENT IS THE PROPERTY OF CERN. IT MAY NOT BE COPIED OR DISCLOSED TO THIRD PARTIES WITHOUT WRITTEN AUTHORISATION