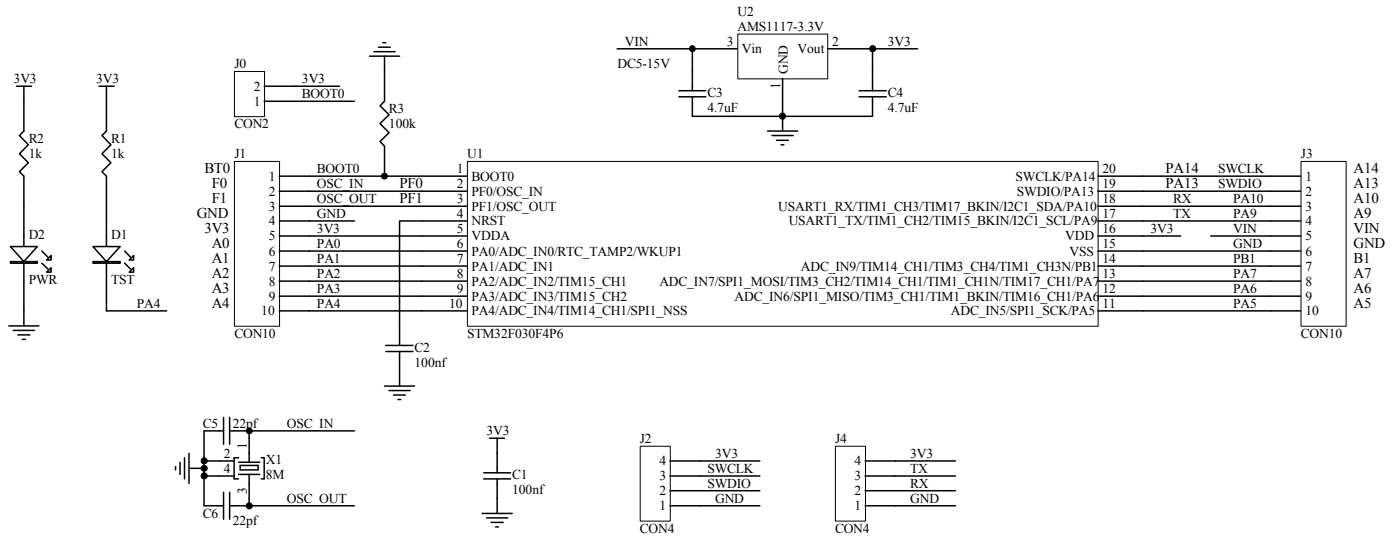

Title		
Size A4	Number	Revision
Date: 14-May-2017		Sheet of
File: J:\BTE17-08\BTE17-08.Ddb		Drawn By: