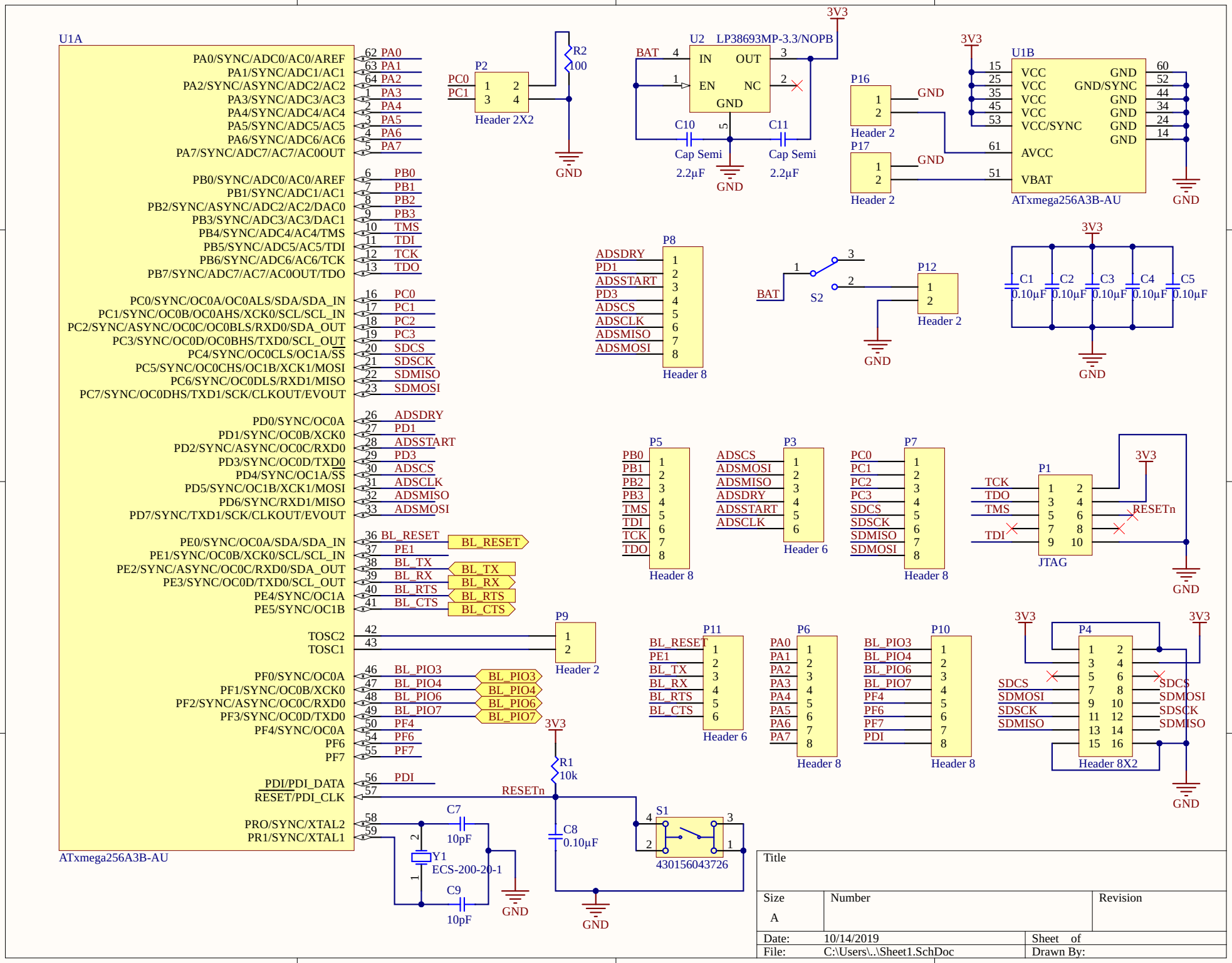
U1A
PA0/SYNC/ADC0/AC0/AREF
PA1/SYNC/ADC1/AC1
PA2/SYNC/ASYNC/ADC2/AC2
PA3/SYNC/ADC3/AC3
PA4/SYNC/ADC4/AC4
PA5/SYNC/ADC5/AC5
PA6/SYNC/ADC6/AC6
PA7/SYNC/ADC7/AC7/AC0OUT
PB0/SYNC/ADC0/AC0/AREF
PB1/SYNC/ADC1/AC1
PB2/SYNC/ASYNC/ADC2/AC2/DAC0
PB3/SYNC/ADC3/AC3/DAC1
PB4/SYNC/ADC4/AC4/TMS
PB5/SYNC/ADC5/AC5/TDI
PB6/SYNC/ADC6/AC6/TCK
PB7/SYNC/ADC7/AC7/AC0OUT/TDO
PC0/SYNC/OC0A/OC0ALS/SDA/SDA_IN
PC1/SYNC/OC0B/OC0AHS/XCK0/SCL/SCL_IN
PC2/SYNC/ASYNC/OC0C/OC0BLS/RXD0/SDA_OUT
PC3/SYNC/OC0D/OC0BHS/TXD0/SCL_OUT
PC4/SYNC/OC0CLS/OC1A/SS
PC5/SYNC/OC0CHS/OC1B/XCK1/MOSI
PC6/SYNC/OC0DLS/RXD1/MISO
PC7/SYNC/OC0DHS/TXD1/SCK/CLKOUT/EVOUT
PD0/SYNC/OC0A
PD1/SYNC/OC0B/XCK0
PD2/SYNC/ASYNC/OC0C/RXD0
PD3/SYNC/OC0D/TXD0
PD4/SYNC/OC1A/SS
PD5/SYNC/OC1B/XCK1/MOSI
PD6/SYNC/RXD1/MISO
PD7/SYNC/TXD1/SCK/CLKOUT/EVOUT
PE0/SYNC/OC0A/SDA/SDA_IN
PE1/SYNC/OC0B/XCK0/SCL/SCL_IN
PE2/SYNC/ASYNC/OC0C/RXD0/SDA_OUT
PE3/SYNC/OC0D/TXD0/SCL_OUT
PE4/SYNC/OC1A
PE5/SYNC/OC1B
TOSC2
TOSC1
PF0/SYNC/OC0A
PF1/SYNC/OC0B/XCK0
PF2/SYNC/ASYNC/OC0C/RXD0
PF3/SYNC/OC0D/TXD0
PF4/SYNC/OC0A
PF6
PF7
PDI/PDI_DATA
RESET/PDI_CLK
PRO/SYNC/XTAL2
PR1/SYNC/XTAL1
ATxmega256A3B-AU
PA0 PA1 PA2 PA3 PA4 PA5 PA6 PA7
PB0 PB1 PB2 PB3 TMS TDI TCK TDO
PC0 PC1 PC2 PC3 SDCS SDSCK SDMISO SDMOSI
ADSDRY PD1 ADSSTART PD3 ADSCS ADSCLK ADSMISO ADSMOSI
BL_RESET PE1 BL_TX BL_RX BL_RTS BL_CTS
BL_PIO3 BL_PIO4 BL_PIO6 BL_PIO7 PF4 PF6 PF7 PDI
RESETn
P2
Header 2X2
R2
100
GND
U2 LP38693MP-3.3/NOPB
BAT
IN OUT
EN NC
GND
C10
Cap Semi
2.2µF
C11
Cap Semi
2.2µF
3V3
P16
Header 2
P17
Header 2
U1B
VCC
VCC/SYNC
AVCC
VBAT
GND/SYNC
ATxmega256A3B-AU
P8
Header 8
S2
P12
Header 2
C1 C2 C3 C4 C5
0.10µF
P5
Header 8
P3
Header 6
P7
Header 8
P1
JTAG
TCK TDO TMS TDI
RESETn
P9
Header 2
P11
Header 6
P6
Header 8
P10
Header 8
P4
Header 8X2
SDCS SDMOSI SDSCK SDMISO
R1
10k
C7
10pF
Y1
ECS-200-20-1
C9
10pF
C8
0.10µF
S1
430156043726
Title
Size
A
Number
Revision
Date: 10/14/2019
Sheet of
File: C:\Users\..\Sheet1.SchDoc
Drawn By:

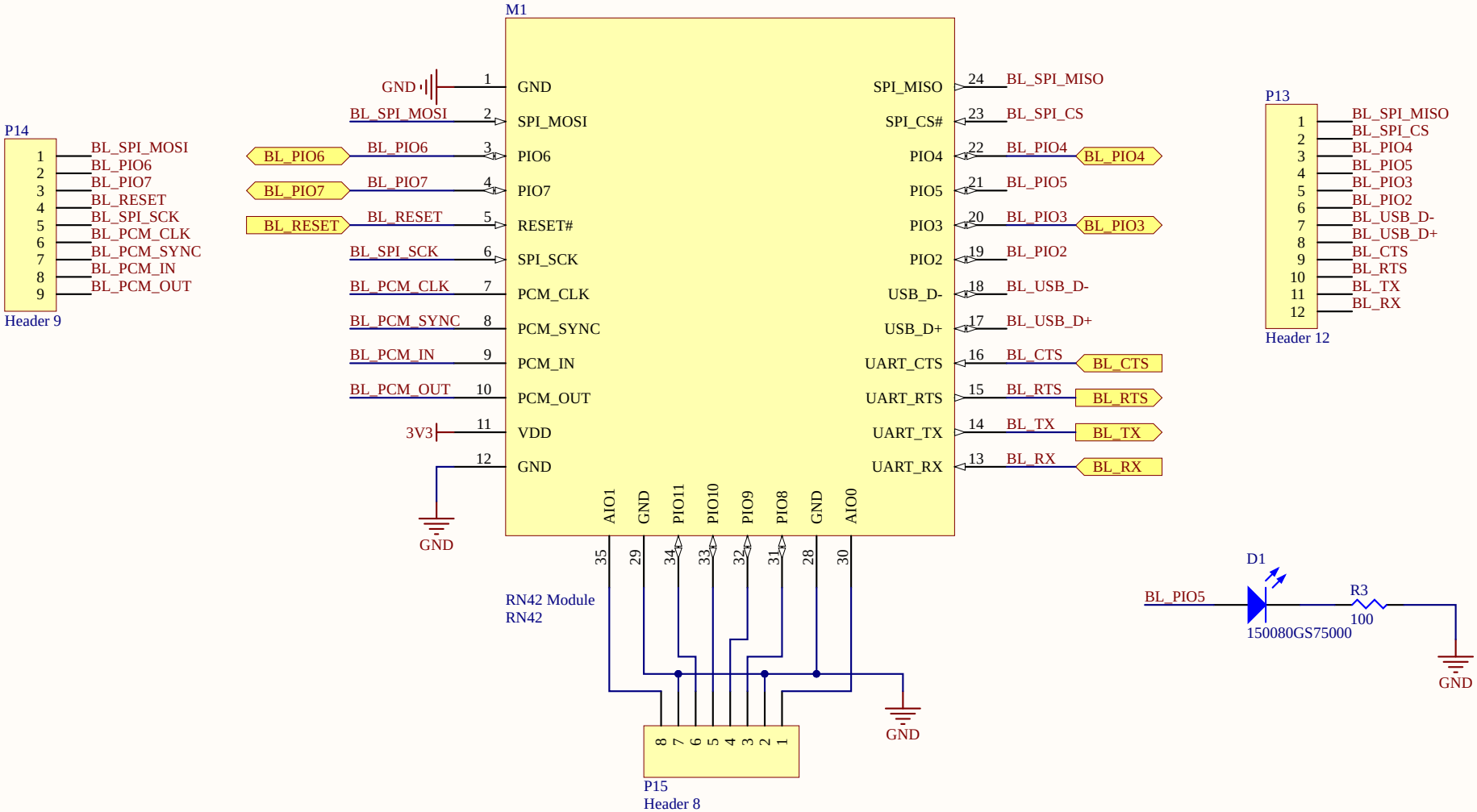

Title		
Size A	Number	Revision
Date: 10/14/2019		Sheet of
File: C:\Users\..\Sheet2.SchDoc		Drawn By:

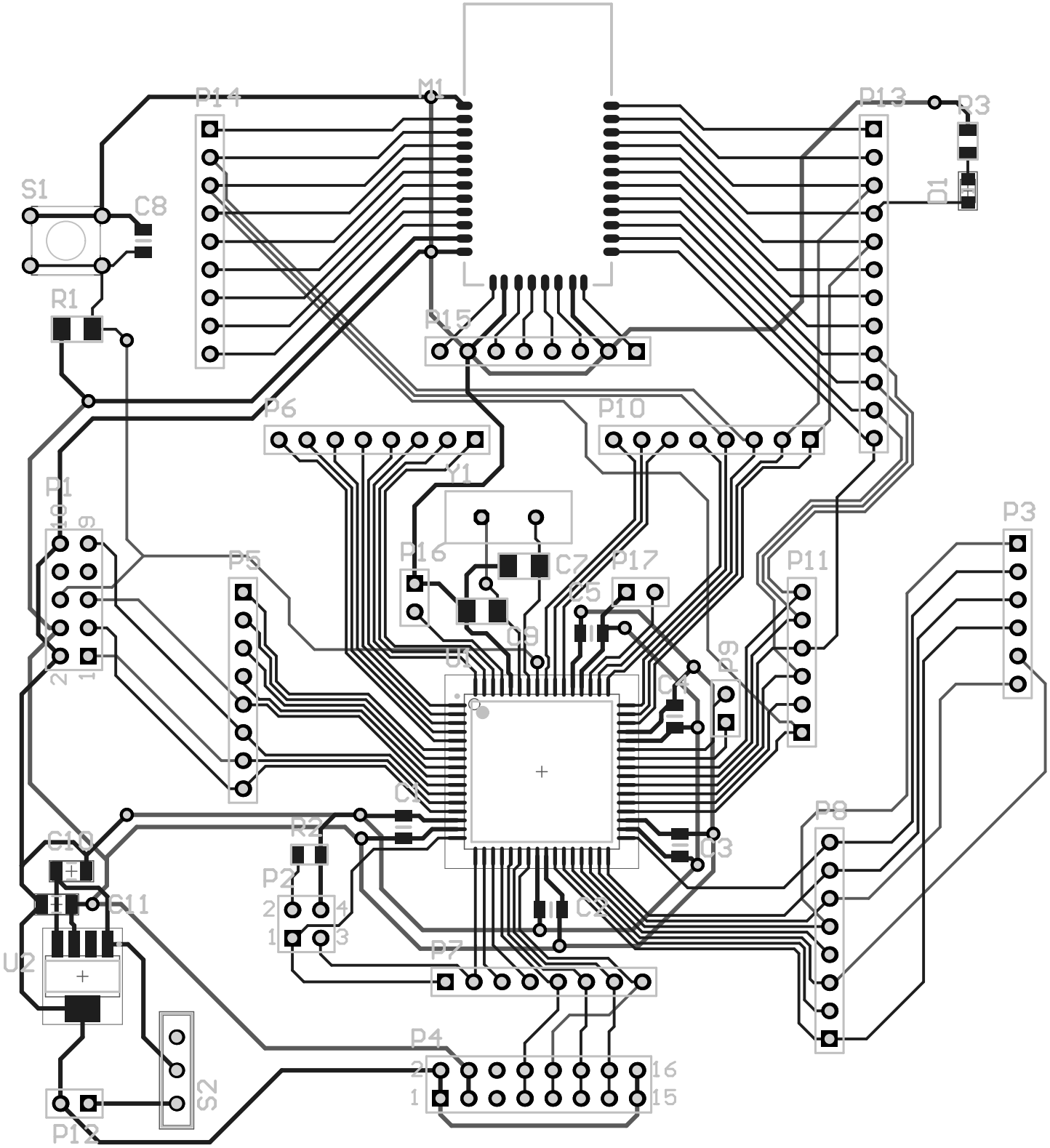
P14
M1
P13
P3
S1
C8
D1
R1
P15
P6
P10
Y1
P1
P3
P5
P16
C7
P17
P11
C5
C9
C6
P9
C4
C1
R2
P8
C10
C3
P2
C11
C2
U2
P7
P4
S2
P12