Pioneer

Service Manual

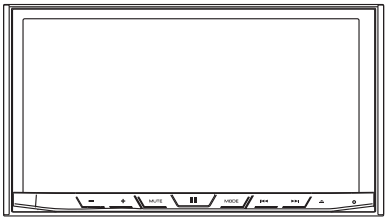

AVH-4200NEX/XNUC

ORDER NO.
CRT5869

DVD RDS AV RECEIVER

AVH-4200NEX/XNUC
AVH-X8800BT/XNEU5
AVH-X8800BT/XNUR
AVH-X8850BT/XNRI
AVH-X8850BT/XNRC
AVH-X8850BT/XNRD
AVH-X8890BT/XNID

This service manual should be used together with the following manual(s):

Model No.	Order No.	Mecha. Module	Remarks
CX-3311	CRT5651	LS2.5	DVD Mecha. Module : Circuit Descriptions, Mecha. Descriptions, Disassembly, Each Setting and Adjustment

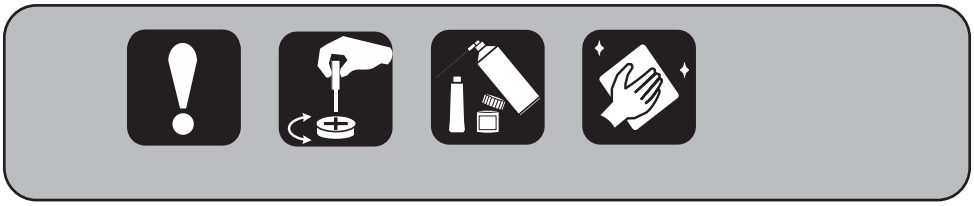

PIONEER CORPORATION 1-1, Shin-ogura, Saiwai-ku, Kawasaki-shi, Kanagawa 212-0031, Japan
PIONEER ELECTRONICS (USA) INC. P.O. Box 1760, Long Beach, CA 90801-1760, U.S.A.
PIONEER EUROPE NV Haven 1087, Keetberglaan 1, 9120 Melsele, Belgium
PIONEER ELECTRONICS ASIACENTRE PTE. LTD. 2 Jalan Kilang Barat, #07-01, Singapore 159346
ⒸPIONEER CORPORATION 2016

K-ZZZ MAR. 2016 Printed in Japan

SAFETY INFORMATION

CAUTION

This service manual is intended for qualified service technicians; it is not meant for the casual do-it-yourselfer.
Qualified technicians have the necessary test equipment and tools, and have been trained to properly and safely repair complex products such as those covered by this manual.
Improperly performed repairs can adversely affect the safety and reliability of the product and may void the warranty.
If you are not qualified to perform the repair of this product properly and safely, you should not risk trying to do so and refer the repair to a qualified service technician.

WARNING

This product may contain a chemical known to the State of California to cause cancer, or birth defects or other reproductive harm.
Health & Safety Code Section 25249.6 - Proposition 65

Where in a manufacturer's service documentation, for example in circuit diagrams or lists of components, a symbol is used to indicate that a specific component shall be replaced only by the component specified in that documentation for safety reasons, the following symbol shall be used:

⚠

- **Safety Precautions for those who Service this Unit.**
  When checking or adjusting the emitting power of the laser diode exercise caution in order to get safe, reliable results.

Caution:

1. **During repair or tests, minimum distance of 13 cm from the focus lens must be kept.**
2. **During repair or tests, do not view laser beam for 10 seconds or longer.**

CAUTION:
USE OF CONTROLS OR ADJUSTMENTS OR PERFORMANCE OF PROCEDURES OTHER THAN THOSE SPECIFIED HEREIN MAY RESULT IN HAZARDOUS RADIATION EXPOSURE.

CAUTION
This product is a class 1 laser product classified under the Safety of laser products, IEC 60825-1:2007, and contains a class 1M laser module. To ensure continued safety, do not remove any covers or attempt to gain access to the inside of the product. Refer all servicing to qualified personnel.

CLASS 1 LASER PRODUCT

CAUTION—CLASS 1M INVISIBLE LASER RADIATION WHEN OPEN, DO NOT VIEW DIRECTLY WITH OPTICAL INSTRUMENTS.

WARNING!

The AEL (accessible emission level)of the laser power output is less than CLASS 1 but the laser component is capable of emitting radiation exceeding the limit for CLASS 1.
A specially instructed person should do servicing operation of the apparatus.

Laser diode characteristics

Wave length:
DVD:660 nm to 670 nm
CD:780 nm to 800 nm

Focus lens on Maximum output:
CD:6.26 mW(Emitting period :9 sec.)
DVD:1.27 mW (Emitting period : unlimited)

Additional Laser Caution

Transistors Q1103 and Q1104 in PCB drive the laser diodes for DVD and CD respectively. When Q1103 or Q1104 is shorted between their terminals, the laser diodes for DVD or CD will radiate beam. If the top cover is removed with no disc loaded while such short-circuit is continued, the naked eyes may be exposed to the laser beam.

CAUTION

Danger of explosion if battery is incorrectly replaced.
Replaced only with the same or equivalent type recommended by the manufacturer.
Discard used batteries according to the manufacturer's instructions.

CONTENTS

SAFETY INFORMATION 2
1. SERVICE PRECAUTIONS 6
1.1 SAFETY PRECAUTIONS 6
1.2 NOTES ON DISASSEMBLY / ASSEMBLY 6
1.3 NOTES ON OPERATION CHECK / DIAGNOSIS 6
1.4 NOTES ON REPLACING PARTS 6
1.5 NOTES ON ADJUSTMENT 7
1.6 OTHERS 7
2. SPECIFICATIONS 7
2.1 SPECIFICATIONS 7
2.2 DISC/CONTENT FORMAT 7
3. BASIC ITEMS FOR SERVICE 8
3.1 CHECK POINTS AFTER SERVICING 8
3.2 PCB LOCATIONS 9
3.3 JIGS LIST 10
3.4 CLEANING 11
4. BLOCK DIAGRAM 12
4.1 OVERALL CONNECTION DIAGRAM 12
4.2 SYSTEM BLOCK DIAGRAM 13
4.3 AUDIO BLOCK DIAGRAM 14
4.4 VIDEO BLOCK DIAGRAM 15
4.5 POWER SUPPLY SYSTEM FIGURE 16
5. DIAGNOSIS 22
5.1 TROUBLESHOOTING 22
5.2 OPERATIONAL FLOWCHART 23
5.3 FUSE CHECK 24
5.4 DIAGNOSIS OF BACK LIGHT 25
5.5 DIAGNOSIS FLOWCHART FOR DVD CORE UNIT 27
5.7 DIAGNOSIS WHEN AMP ERROR OR PRODUCT OVERHEAT IS DISPLAYED 29
5.8 INSPECTION METHOD OF PICKUP UNIT 30
5.9 ERROR CODE LIST 33
5.10 CONNECTOR FUNCTION DESCRIPTION 35
6. SERVICE MODE 37
6.1 TEST MODE 37
6.2 DVD TEST MODE 63
7. DISASSEMBLY 68
8. EACH SETTING AND ADJUSTMENT 80
8.1 ADJUSTMENT REQUIRED WHEN THE UNIT IS REPLACED 80
8.2 FLICKER ADJUSTMENT 81
8.3 TOUCH PANEL TEST AND ADJUSTMENT 82
8.4 DEVICE NUMBER REWRITING (UC MODEL ONLY) 86
9. EXPLODED VIEWS AND PARTS LIST 87
9.1 PACKING 87
9.2 EXTERIOR (1) 92
9.3 EXTERIOR (2) 92
9.4 EXTERIOR (3) 94
9.5 EXTERIOR (4) 96
9.6 DVD MECHANISM MODULE (1) 98
9.7 DVD MECHANISM MODULE (2) 100
10. SCHEMATIC DIAGRAM 101
10.1 AV UNIT(S VEHICLE IF) 101
10.2 AV UNIT(PWIC) 102
10.3 AV UNIT(AV POWER) 103
10.4 AV UNIT(TUNER POWER) 104
10.5 AV UNIT(SYSTEM UCOM) 105
10.6 AV UNIT(S AVSEL) 106
10.7 AV UNIT(AUDIO SEL) 107
10.8 AV UNIT(GUIDE AUDIO SEL) 108
10.9 AV UNIT(DSP) 109
10.10 AV UNIT(DAC LPF) 110
10.11 AV UNIT(S EVOL) 111
10.12 AV UNIT(DISTRIBUTION) 112
10.13 AV UNIT(LITHIO-DR) 113
10.14 AV UNIT(WWR) 114

10.15 AV UNIT(LS 2.5 IF) 115
10.16 AV UNIT(FLAP MECHA) 116
10.17 AV UNIT(AV-IF IF) 117
10.18 AV UNIT(iPod RGB) 118
10.19 AV UNIT(AV REAR I/O) 119
10.20 IF UNIT (SERVICE) (IF POWER) 120
10.21 IF UNIT (SERVICE) (2CHDDCON) 121
10.22 IF UNIT (SERVICE) (USB POWER) 122
10.23 IF UNIT (SERVICE) (BTOB CN) 123
10.24 IF UNIT (SERVICE) (SD IF) 124
10.25 IF UNIT (SERVICE) (SOC DAC) 125
10.26 IF UNIT (SERVICE) (BT MIC) 126
10.27 IF UNIT (SERVICE) (DTV IF) 127
10.28 IF UNIT (SERVICE) (VIDEO DECODER) 128
10.29 IF UNIT (SERVICE) (HDMI IRX) 129
10.30 IF UNIT (SERVICE) (CHIPS IF) 130
10.31 IF UNIT (SERVICE) (AV IF) 131
10.32 IF UNIT (SERVICE) (MONITOR IF) 132
10.33 IF UNIT (SERVICE) (IF REAR I/O) 133
10.34 IF UNIT (SERVICE) (AEQ IF) 134
10.35 DVD CORE UNIT 135
10.36 SOC SINGLE CORE UNIT (SOC) 136
10.37 SOC SINGLE CORE UNIT (DDR3) 137
10.38 SOC SINGLE CORE UNIT (FLASH) 138
10.39 SOC SINGLE CORE UNIT (VENC) 139
10.40 SOC SINGLE CORE UNIT (POWER/RESET) 140
10.41 SOC SINGLE CORE UNIT (AROUND SOC) 141
10.42 SOC SINGLE CORE UNIT (BTOB CN) 142
10.43 MONITOR UNIT (SERVICE) (MAIN IF) 143
10.46 MONITOR UNIT (SERVICE) (BL DRIVER) 146
10.45 MONITOR UNIT (SERVICE) (T-CON) 145
10.46 MONITOR UNIT (SERVICE) (BL DRIVER) 146
10.47 MONITOR UNIT (SERVICE) (LCD POWER) 147
10.48 MONITOR UNIT (SERVICE) (LCD IF) 148
10.49 KEY UNIT (SERVICE) 149
10.50 CASE UNIT (SERVICE) 150
10.51 SW UNIT (SERVICE) 151
10.52 PCB ASSY (SERVICE) 152
11. PCB CONNECTION DIAGRAM 153
11.1 AV UNIT 153
11.2 IF UNIT (SERVICE) 155
11.3 DVD CORE UNIT 157
11.4 SOC SINGLE CORE UNIT 159
11.5 MONITOR UNIT (SERVICE) 161
11.6 KEY UNIT (SERVICE) 163
11.7 CASE UNIT (SERVICE) 164
11.8 SW UNIT (SERVICE) 165
11.9 PCB ASSY (SERVICE) 166
12. ELECTRICAL PARTS LIST 167

1. SERVICE PRECAUTIONS

1.1 SAFETY PRECAUTIONS

- You should conform to the regulations governing the product (safety, radio and noise, and other regulations), and should keep the safety during servicing by following the safety instructions described in this manual.

- Please keep the distance of more than 13 cm from focus lens for safety when you check pickup and make adjustment, and do not look straight at Laser Beam for more than 10 seconds.

1.2 NOTES ON DISASSEMBLY / ASSEMBLY

- Before disassembling the unit, be sure to turn off the power. Unplugging and plugging the connectors during power-on mode may damage the ICs inside the unit.

- To protect the pickup unit from electrostatic discharge during servicing, take an appropriate treatment (shorting-solder) by referring to CRT5651 "3.4 HOW TO REMOVE AND INSTALL THE DVD CORE UNIT".

- Please be sure to conduct line process to original status if you make assembling after repair.

1.3 NOTES ON OPERATION CHECK / DIAGNOSIS

- EJECT LOCK MODE for DVD mechanism
  < Procedure >
  To enter EJECT LOCK MODE : Reset start while pressing [EJECT] key and [TRACK UP] key.
  To exit EJECT LOCK MODE : Follow the same steps to enter this mode.

- When a home product is used in a vehicle (using DC/AC converter), GND on secondary side of some devices of home products (PS etc.) becomes indefinite. If these devices are connected to the unit, GND becomes indefinite because ISO is received and the video disordered.
  If a defect is generated in a market, the land is prepared between GNDs for connecting GND of the unit sides and VGND of input as a service.
  With this product, a part of VGND pattern is thin. If it is used, insert 0.5A of fuse.
  A used part and wiring numbers are shown below.
  Wiring number: P2204, P2205
  Used part: CEK1379 or CEK1278

1.4 NOTES ON REPLACING PARTS

- Be careful in handling ICs. Some ICs such as MOS type are so fragile that they can be damaged by electrostatic induction.

- Please be careful of not to apply static charge onto integrated circuits, etc, when you conduct repair work.
  Especially, please use soldering iron with its tip grounded.
  Also, please use a pair of tweezers with static charge protection capability if there is the possibility of contacting to device terminals, and avoid the use of metal-made tweezers.

- The part listed below is difficult to replace as a discrete component part.
  When the part listed in the table is defective, replace whole Assy.

AV UNIT	IC602	UPD70F3925AGMA	Blank IC
	IC1501	TEF6688HN / TEF6686HN	Heat pad, terminal is bent inside
IF UNIT (SERVICE)	IC8001	MN864779KT	BGA
	IC8502	MAX14644ETA	Heat pad, terminal is bent inside
MONITOR UNIT (SERVICE)	IC3001	TC90193ASBG	BGA
	IC3201	R1290K103A	Terminal is bent inside
SOC SINGLE CORE UNIT	IC4001	MCIMX6S6AVM08AC	BGA
	IC4301	H5TQ4G63CFR-RDC	BGA
	IC4302	H5TQ4G63CFR-RDC	BGA
	IC4402	PE1038A	BGA
	IC4701	LTC3612EUDC	Heat pad, terminal is bent inside
	IC4721	LTC3612EUDC	Heat pad, terminal is bent inside
	IC4741	LTC3612EUDC	Heat pad, terminal is bent inside
	IC4901	337S3959	Heat pad, terminal is bent inside

- On this mechanism, Pickup and Spindle Motor can not be replaced at the Service Site, because a special facility is required for the adjustment after replacing them.
  So, if Pickup or Spindle Motor is defective, replace the DVD Mechanism Module.

1.5 NOTES ON ADJUSTMENT

- Some of the adjustment is required when the part is replaced.
  Pease refer to “8.1 ADJUSTMENT REQUIRED WHEN THE UNIT IS REPLACED”.

1.6 OTHERS

●Notes on soldring

For environmental protection, lead-free solder is used on the printed circuit boards mounted in this unit.
Be sure to use lead-free solder and a soldering iron that can meet specifications for use with lead-free solders for repairs accompanied by reworking of soldering.

2. SPECIFICATIONS

2.1 SPECIFICATIONS

For all Items except the backup current, refer to the Owner’s Manual.

Backup current ..... 2.5 mA or less

2.2 DISC/CONTENT FORMAT

is a trademark of DVD Format/Logo Licensing Corporation .

HD Radio®
This HD Radio receiver enables:
PSD
HD2/HD3
Digital Sound
iTunes® Tagging
Artist Experience

The Bluetooth® word mark and logos are registered trademarks owned by Bluetooth SIG, Inc. and any use of such marks by PIONEER CORPORATION is under license.
Other trademarks and trade names are those of their respective owners.

3. BASIC ITEMS FOR SERVICE

3.1 CHECK POINTS AFTER SERVICING

To keep the product quality after servicing, please confirm following check points.

No.		Procedures	Item to be confirmed
1		Confirm whether the customer complain has been solved. If the customer complain occurs with the specific media, use it for the operation check.	The customer complain must not be reappeared. Display, video, audio and operations must be normal.
2	Flap-mecha	Check the operation of the flap mechanism.	The flap mechanism operation must be smooth without making the noise and scratches.
3	DVD	Measure playback error rates at the innermost and outermost tracks by using the test mode with the following disc. DVD Test Disc (TDV-582)	Deterioration of mecha-drive can be checked. The error rate must be less than the threshold value. (Refer to the chapter of DIAGNOSIS for the threshold value.)
4	DVD	Play back a DVD. (Menu operation; Title/chapter search)	Display, video, audio and operations must be normal.
5	CD	Play back a CD. (Track search)	Display, audio and operations must be normal.
6	FM/AM Tuner	Check FM/AM Tuner action. (Seek, Preset) Switch band to check both FM and AM.	Display, audio and operations must be normal. * If the reception sensitivity is poorer than normal, the gasket on the FM/AM Tuner Unit may be damaged or lost.
7	USB	Check USB-memory action. (Seek, Preset)	Display, video, audio and operations must be normal.
8		Check whether no media(CD etc.) is inside the product.	The media used for the operating check must be ejected.
9		Appearance check	No scratches or dirt on its appearance after receiving it for service.

See the table below for the items to be checked regarding video and audio:

Item to be checked regarding video	Item to be checked regarding audio
Block-noise	Distortion
Horizontal noise	Noise
Dot noise	Volume too low
Disturbed image (video jumpiness)	Volume too high
Too dark	Volume fluctuating
Too bright	Sound interrupted
Mottled color	

3.2 PCB LOCATIONS

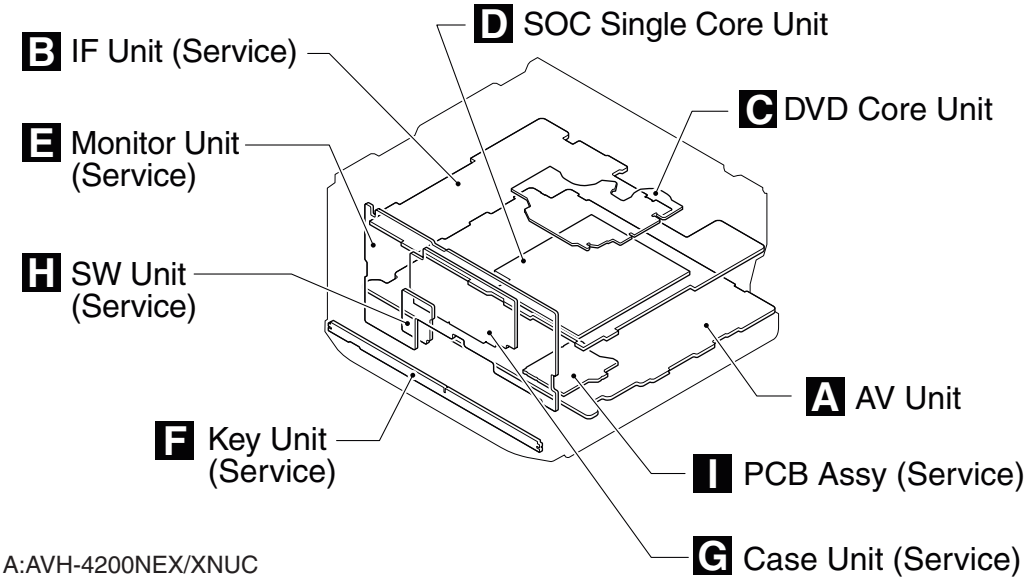

A:AVH-4200NEX/XNUC
B:AVH-X8800BT/XNEU5
C:AVH-X8800BT/XNUR
D:AVH-X8850BT/XNRC
E:AVH-X8850BT/XNRD
F:AVH-X8850BT/XNRI
G:AVH-X8890BT/XNID

Unit Name : AV Unit
Unit Number: CWN9901(A)
Unit Number: CWN9896(B)
Unit Number: CWN9902(C)
Unit Number: CWN9898(D)
Unit Number: CWN9899(E)
Unit Number: CWN9900(F)
Unit Number: CWN9897(G)

Unit Name : IF Unit (Service)
Unit Number: CXX8721(A)
Unit Number: CXX8719(B)
Unit Number: CXX8722(C)
Unit Number: CXX8720(D,E,F,G)

Unit Name : DVD Core Unit
Unit Number : CWX4717

Unit Name : SOC Single Core Unit
Unit Number : CWN9904

Unit Name : Monitor Unit (Service)
Unit Number : CXX8726

Unit Name : Key Unit (Service)
Unit Number : CXX8724

Unit Name : Case Unit (Service)
Unit Number : CXX8729

Unit Name : SW Unit (Service)
Unit Number : CXX8728

Unit Name : PCB Assy (Service)
Unit Number : EXX2001

3.3 JIGS LIST

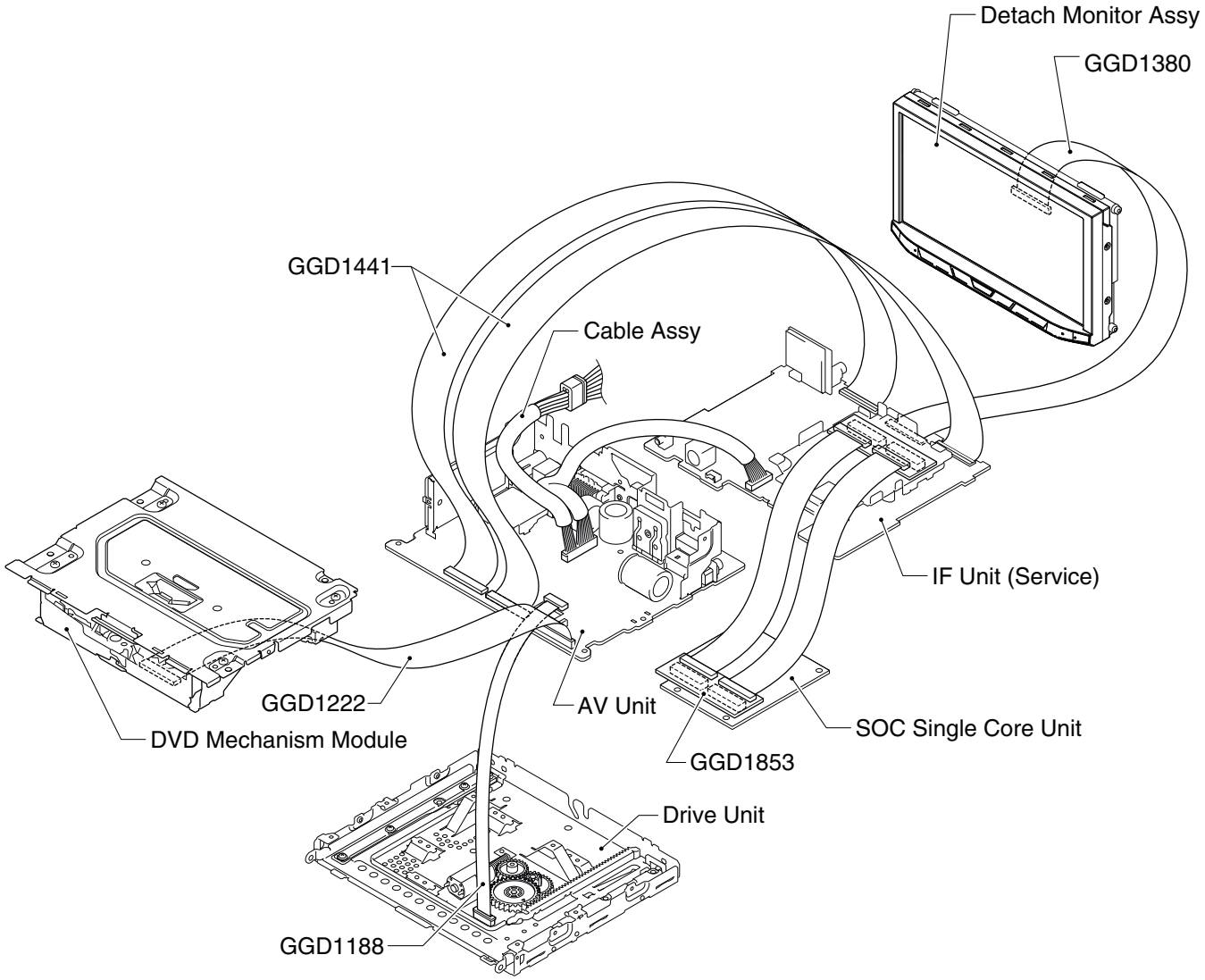

Jigs List

Name	Jig No.	Remarks
DISC(DVD-Video)	TDV-582 (GGV1025)	Check points after servicing, Inspection method of Pickup Unit
DISC(CD-DA)	TCD-782	Inspection method of Pickup Unit
100P, 120P B to B Extension	GGD1853	IF UNIT(SERVICE) <--> SOC SINGLE CORE UNIT
60P FFC Extension Cable	GGD1380	CASE UNIT(SERVICE) <--> IF UNIT(SERVICE)
60P FFC Extension Cable	GGD1441 x 2pcs	IF UNIT(SERVICE) <--> AV UNIT
10P FFC Extension Cable	GGD1188	AV UNIT <--> DRIVE UNIT
30P FFC Extension Cable	GGD1222	AV UNIT <--> DVD MECHANISM MODULE(LS2.5)
Test Mode File	GGS1152	For enter test mode
Test Mode File	GGS1153	For enter DVD test mode

Grease List

Name	Jig No.	Remarks
Grease	GEM1024	DVD Mechanism Module, Drive Unit
Grease	GEM1043	DVD Mechanism Module, Drive Unit
Grease	GEM1045	DVD Mechanism Module

3.4 CLEANING

Before shipping out the product, be sure to clean the following portions by using the prescribed cleaning tools:

Portions to be cleaned	Cleaning tools
DVD pickup lense	Cleaning liquid : GEM1004 Cleaning paper : GED-008

Portions to be cleaned	Cleaning tools
Fan	Cleaning paper : GED-008

4. BLOCK DIAGRM

Note: When ordering service parts, be sure to refer to " EXPLODED VIEWS AND PARTS LIST" or "ELECTRICAL PARTS LIST".

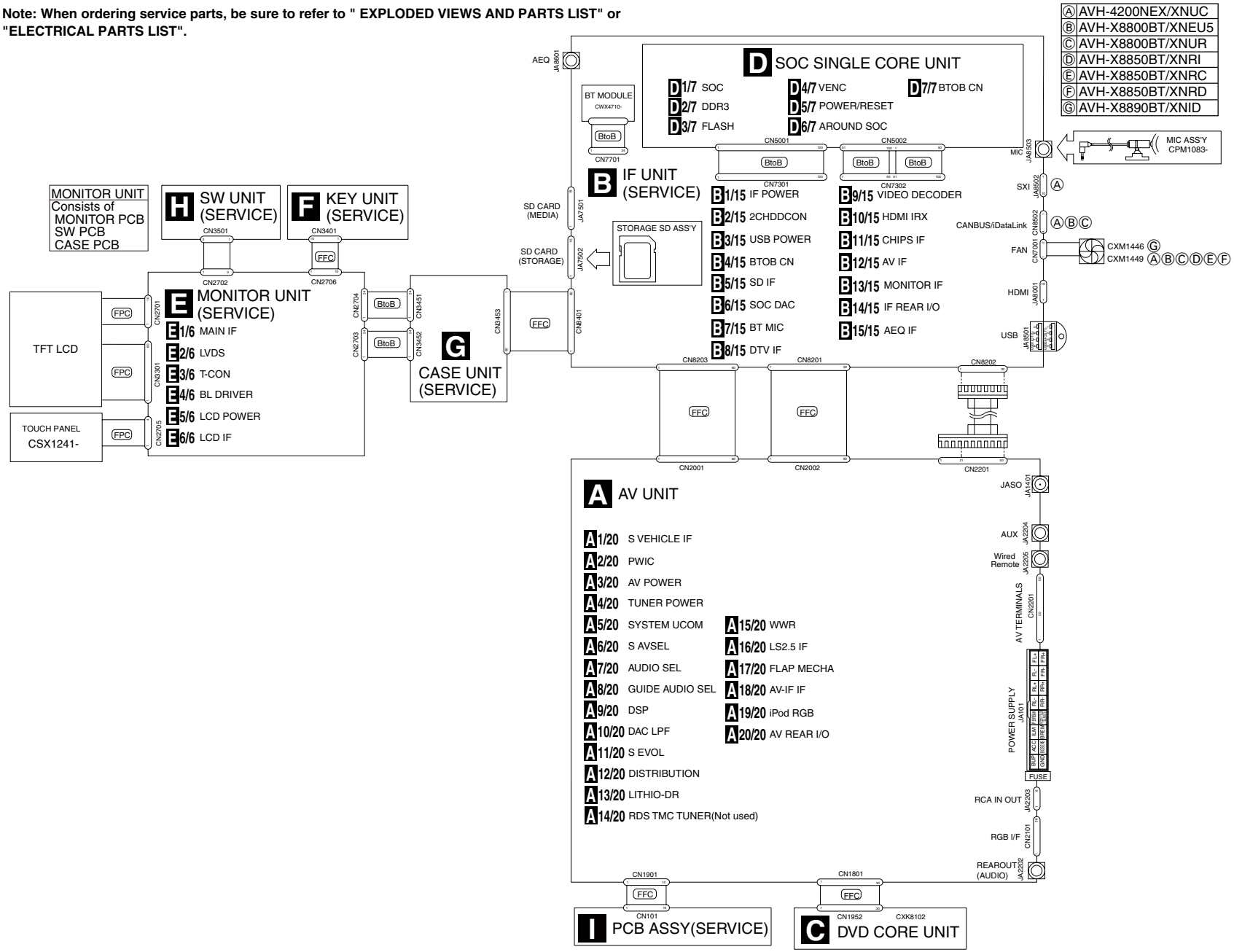

● SYSTEM BLOCK DIAGRAM

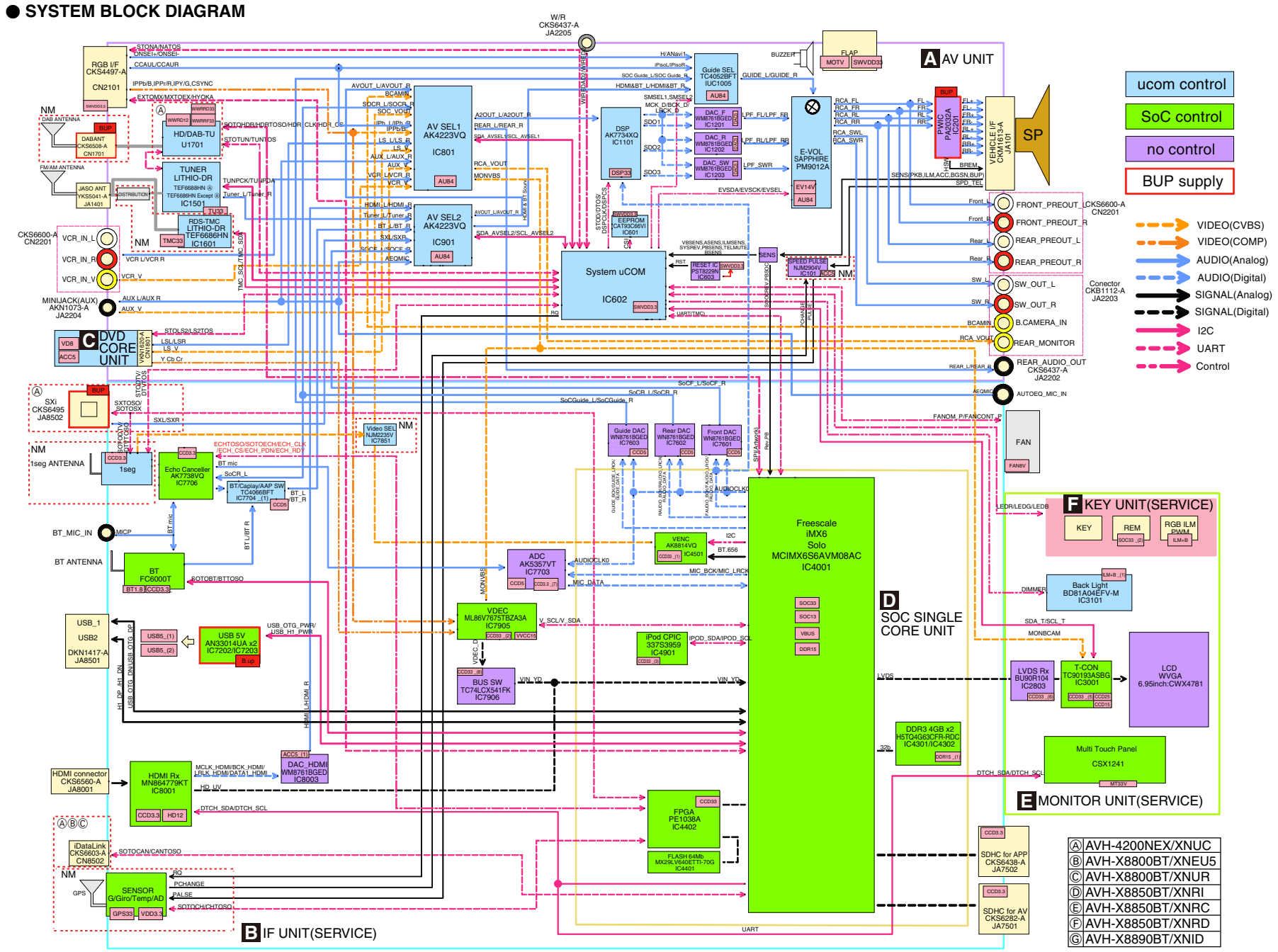

● AUDIO BLOCK DIAGRAM

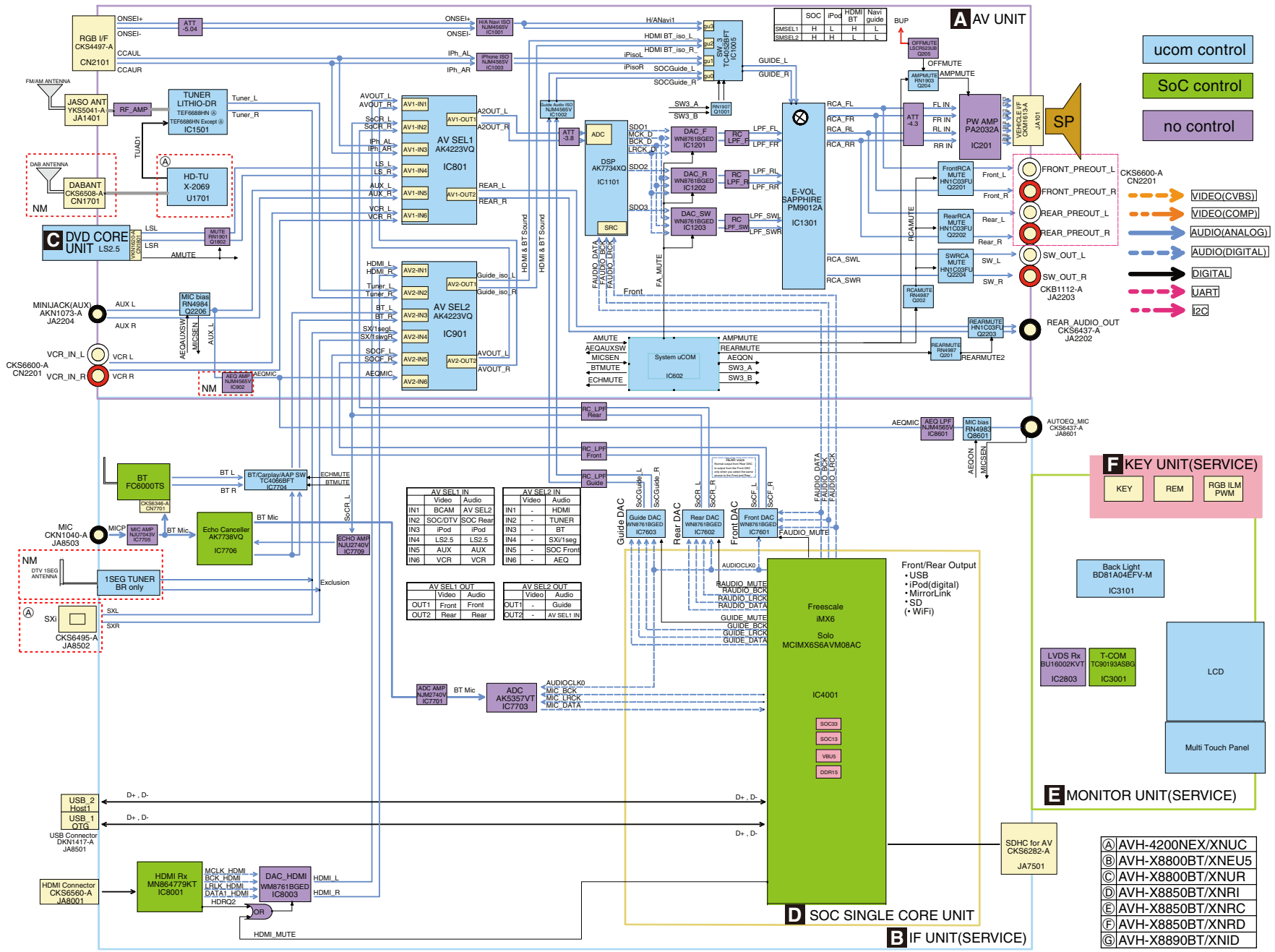

● VIDEO BLOCK DIAGRAM

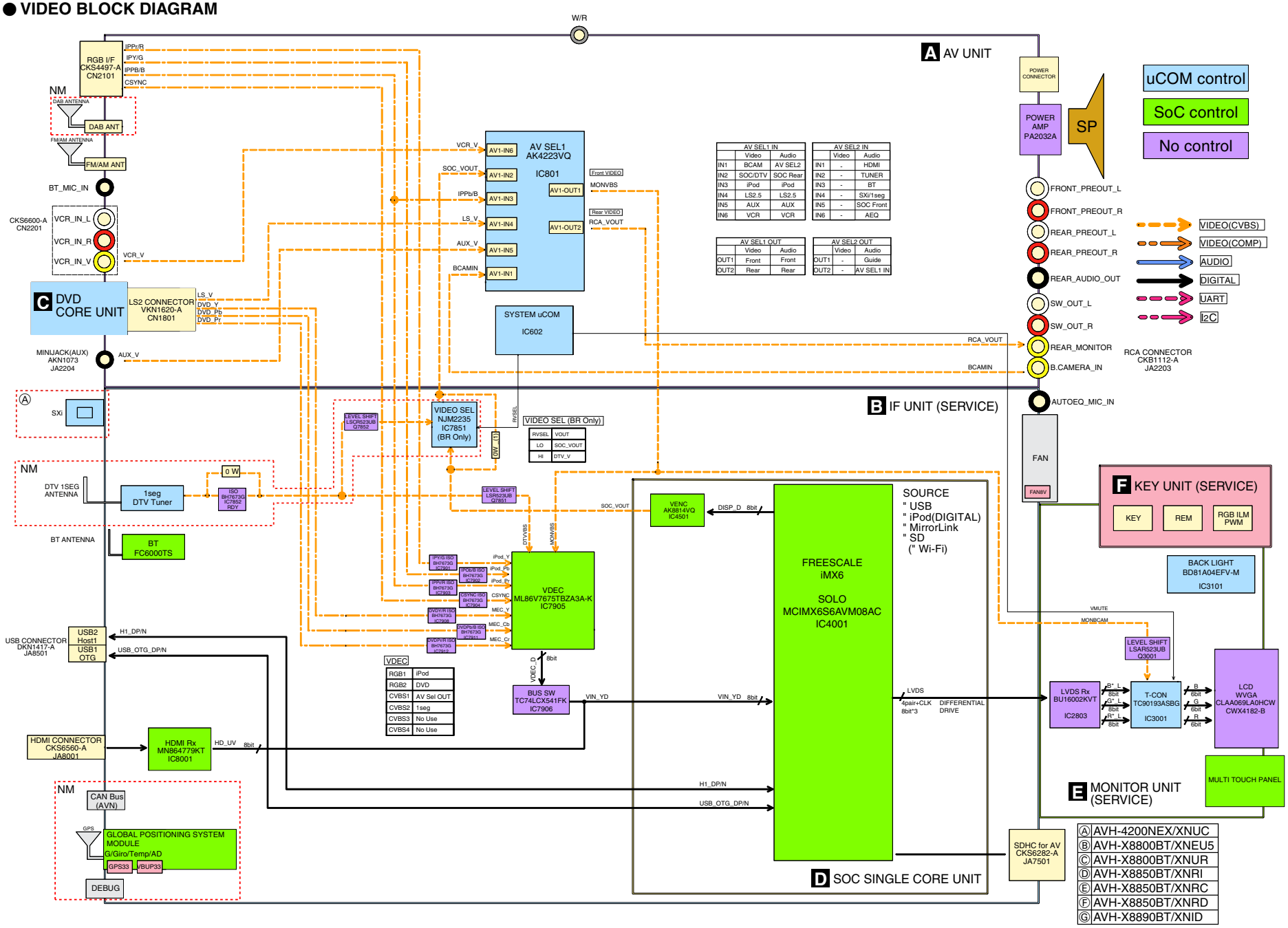

AV SEL1 IN	Video	Audio
IN1	BCAM	AV SEL2
IN2	SOC/DTV	SOC Rear
IN3	iPod	iPod
IN4	LS2.5	LS2.5
IN5	AUX	AUX
IN6	VCR	VCR

AV SEL2 IN	Video	Audio
IN1	-	HDMI
IN2	-	TUNER
IN3	-	BT
IN4	-	SXi/1seg
IN5	-	SOC Front
IN6	-	AEQ

AV SEL1 OUT	Video	Audio
OUT1	Front	Front
OUT2	Rear	Rear

AV SEL2 OUT	Video	Audio
OUT1	-	Guide
OUT2	-	AV SEL1 IN

VIDEO SEL (BR Only)	
RVSEL	VOUT
LO	SOC_VOUT
HI	DTV_V

VDEC	
RGB1	iPod
RGB2	DVD
CVBS1	AV Sel OUT
CVBS2	1seg
CVBS3	No Use
CVBS4	No Use

Ⓐ	AVH-4200NEX/XNUC
Ⓑ	AVH-X8800BT/XNEU5
Ⓒ	AVH-X8800BT/XNUR
Ⓓ	AVH-X8850BT/XNRI
Ⓔ	AVH-X8850BT/XNRC
Ⓕ	AVH-X8850BT/XNRD
Ⓖ	AVH-X8890BT/XNID

4.5 POWER SUPPLY SYSTEM FIGURE

● POWER SUPPLY SYSTEM FIGURE

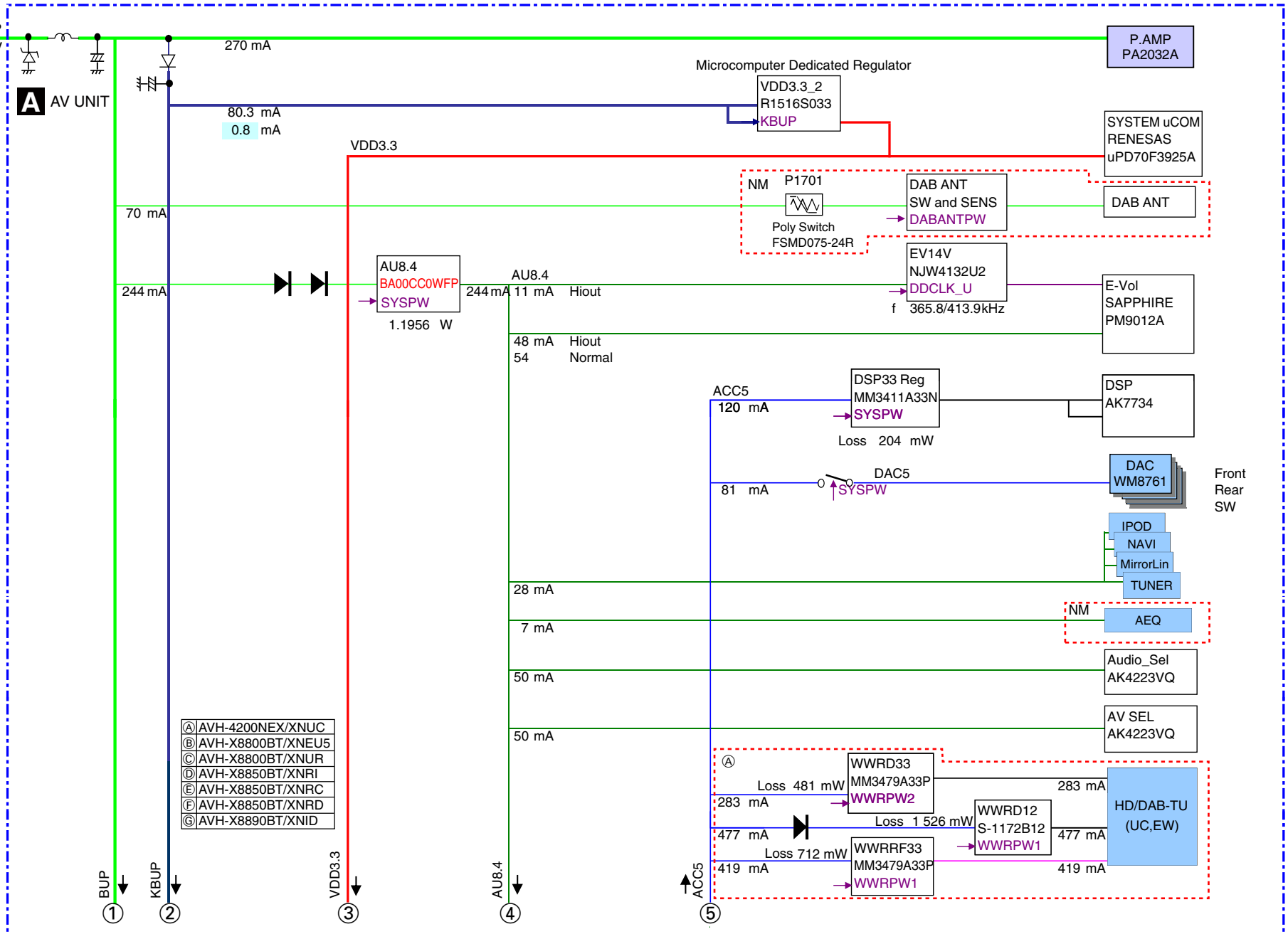

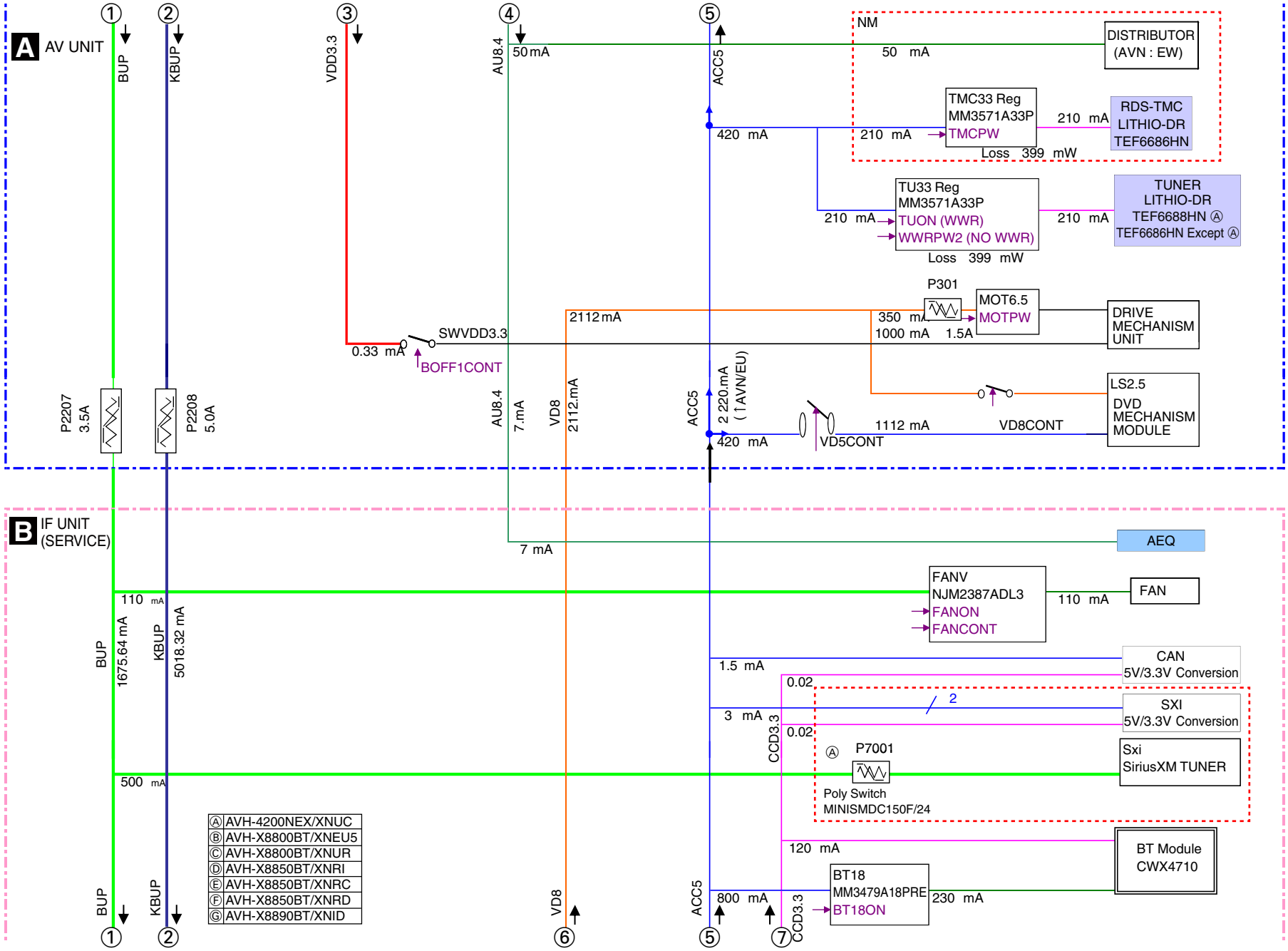
A AV UNIT
B IF UNIT (SERVICE)
BUP
KBUP
VDD3.3
AU8.4
ACC5
VD8
CCD3.3
P2207 3.5A
P2208 5.0A
50 mA
0.33 mA
SWVDD3.3
BOFF1CONT
2112 mA
2112.mA
7.mA
2 220.mA (↑AVN/EU)
420 mA
VD5CONT
NM
DISTRIBUTOR (AVN : EW)
50 mA
TMC33 Reg MM3571A33P
TMCPW
210 mA
Loss 399 mW
RDS-TMC LITHIO-DR TEF6686HN
TU33 Reg MM3571A33P
TUON (WWR)
WWRPW2 (NO WWR)
TUNER LITHIO-DR TEF6688HN Ⓐ TEF6686HN Except Ⓐ
P301
MOT6.5
MOTPW
350 mA
1000 mA
1.5A
DRIVE MECHANISM UNIT
LS2.5
DVD MECHANISM MODULE
1112 mA
VD8CONT
7 mA
AEQ
FANV NJM2387ADL3
FANON
FANCONT
110 mA
FAN
1675.64 mA
5018.32 mA
500 mA
1.5 mA
CAN 5V/3.3V Conversion
0.02
2
3 mA
SXI 5V/3.3V Conversion
P7001
Poly Switch MINISMDC150F/24
Sxi SiriusXM TUNER
120 mA
BT Module CWX4710
BT18 MM3479A18PRE
BT18ON
800 mA
230 mA
Ⓐ AVH-4200NEX/XNUC
Ⓑ AVH-X8800BT/XNEU5
Ⓒ AVH-X8800BT/XNUR
Ⓓ AVH-X8850BT/XNRI
Ⓔ AVH-X8850BT/XNRC
Ⓕ AVH-X8850BT/XNRD
Ⓖ AVH-X8890BT/XNID

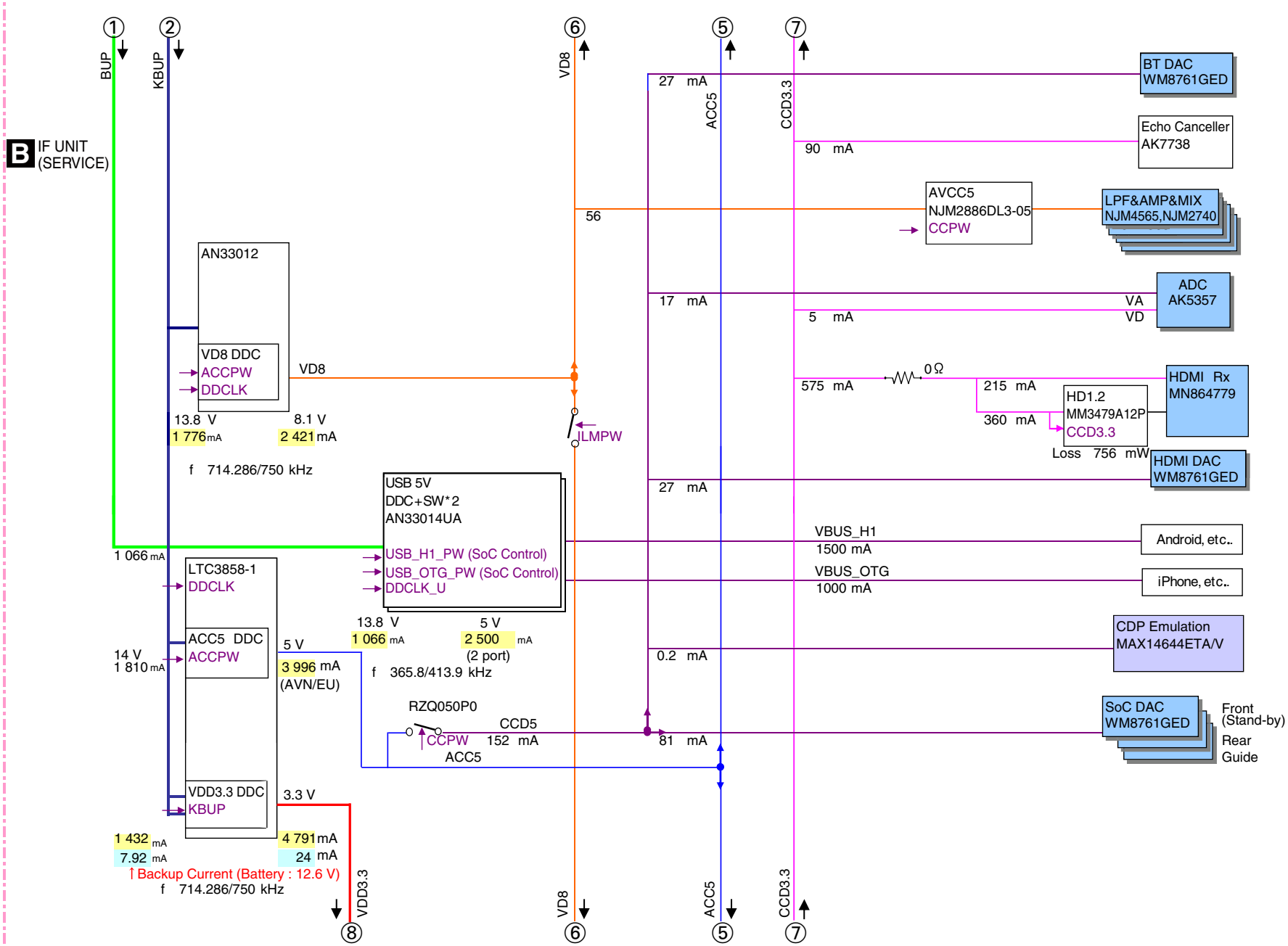
B IF UNIT (SERVICE)
BUP
KBUP
VD8
ACC5
CCD3.3
VDD3.3
AN33012
VD8 DDC
ACCPW
DDCLK
VD8
13.8 V
1 776 mA
8.1 V
2 421 mA
f 714.286/750 kHz
ILMPW
USB 5V
DDC+SW*2
AN33014UA
USB_H1_PW (SoC Control)
USB_OTG_PW (SoC Control)
DDCLK_U
13.8 V
1 066 mA
5 V
2 500 mA
(2 port)
f 365.8/413.9 kHz
1 066 mA
LTC3858-1
DDCLK
ACC5 DDC
ACCPW
14 V
1 810 mA
5 V
3 996 mA
(AVN/EU)
RZQ050P0
CCD5
CCPW
152 mA
ACC5
VDD3.3 DDC
KBUP
3.3 V
1 432 mA
7.92 mA
4 791 mA
24 mA
Backup Current (Battery : 12.6 V)
f 714.286/750 kHz
27 mA
90 mA
56
17 mA
5 mA
VA
VD
575 mA
0 Ω
215 mA
360 mA
Loss 756 mW
27 mA
VBUS_H1
1500 mA
VBUS_OTG
1000 mA
0.2 mA
81 mA
BT DAC
WM8761GED
Echo Canceller
AK7738
AVCC5
NJM2886DL3-05
CCPW
LPF&AMP&MIX
NJM4565,NJM2740
ADC
AK5357
HDMI Rx
MN864779
HD1.2
MM3479A12P
CCD3.3
HDMI DAC
WM8761GED
Android, etc..
iPhone, etc..
CDP Emulation
MAX14644ETA/V
SoC DAC
WM8761GED
Front
(Stand-by)
Rear
Guide

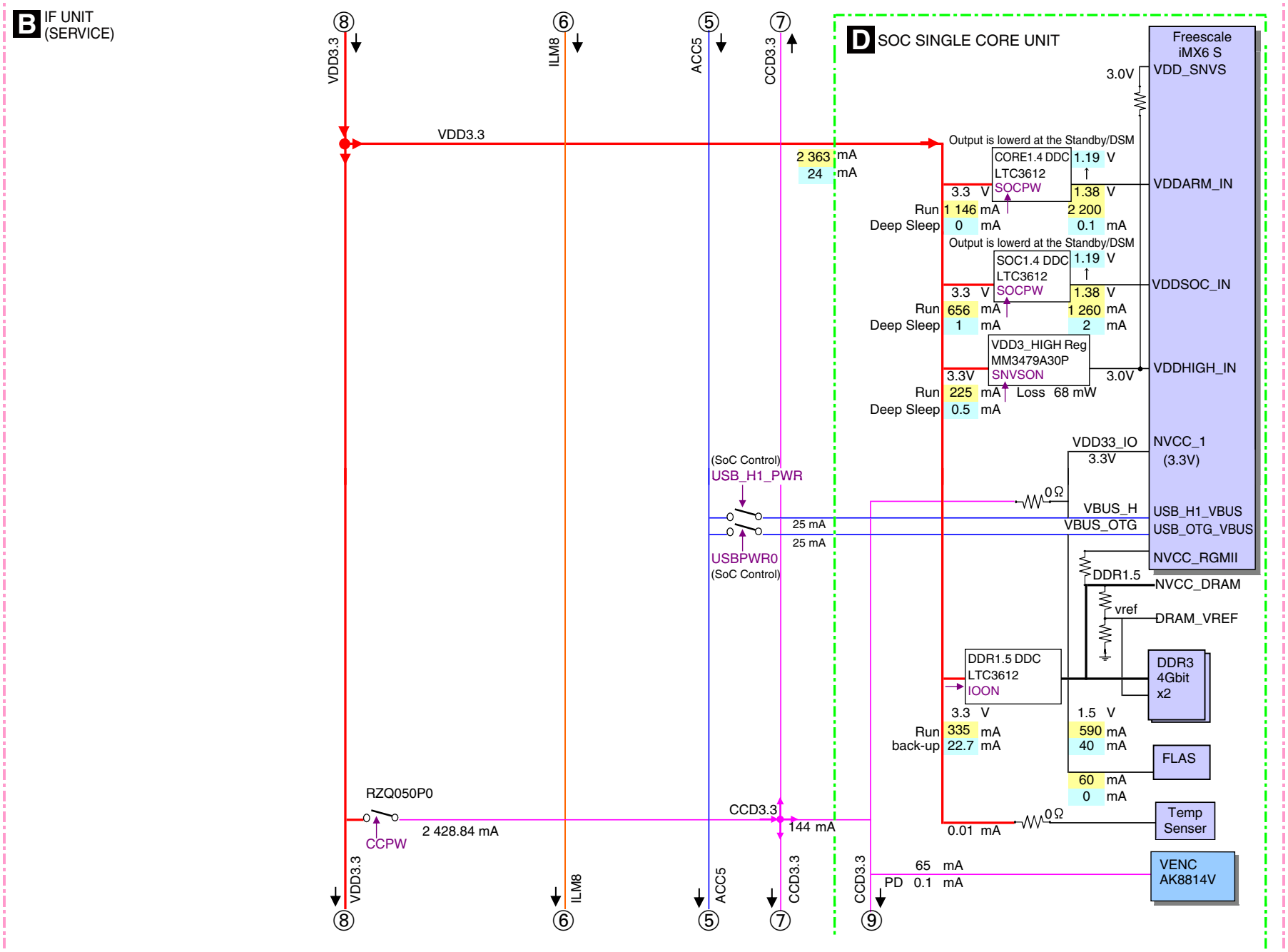

AVH-4200NEX/XNUC

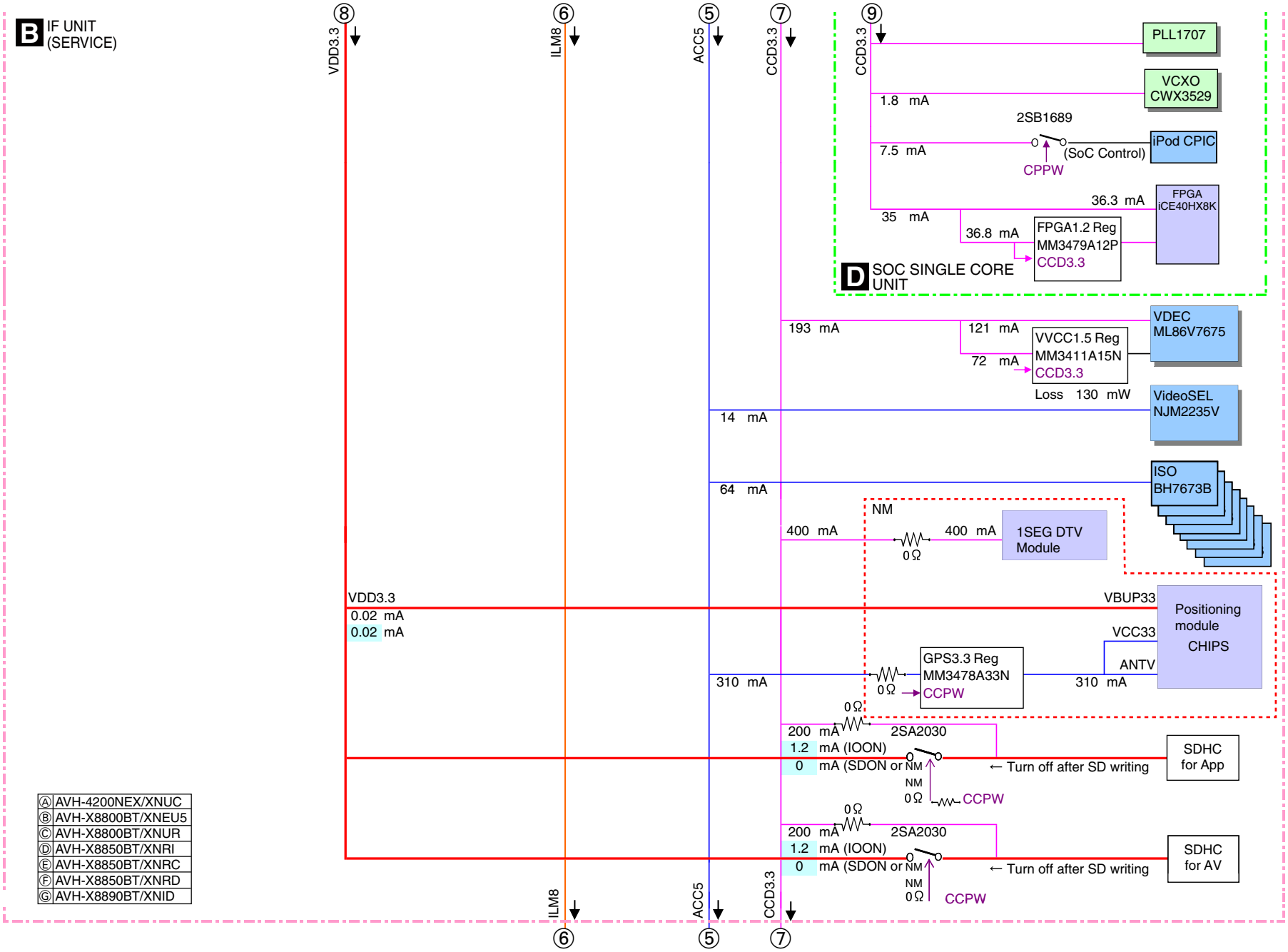

Ⓐ	AVH-4200NEX/XNUC
Ⓑ	AVH-X8800BT/XNEU5
Ⓒ	AVH-X8800BT/XNUR
Ⓓ	AVH-X8850BT/XNRI
Ⓔ	AVH-X8850BT/XNRC
Ⓕ	AVH-X8850BT/XNRD
Ⓖ	AVH-X8890BT/XNID

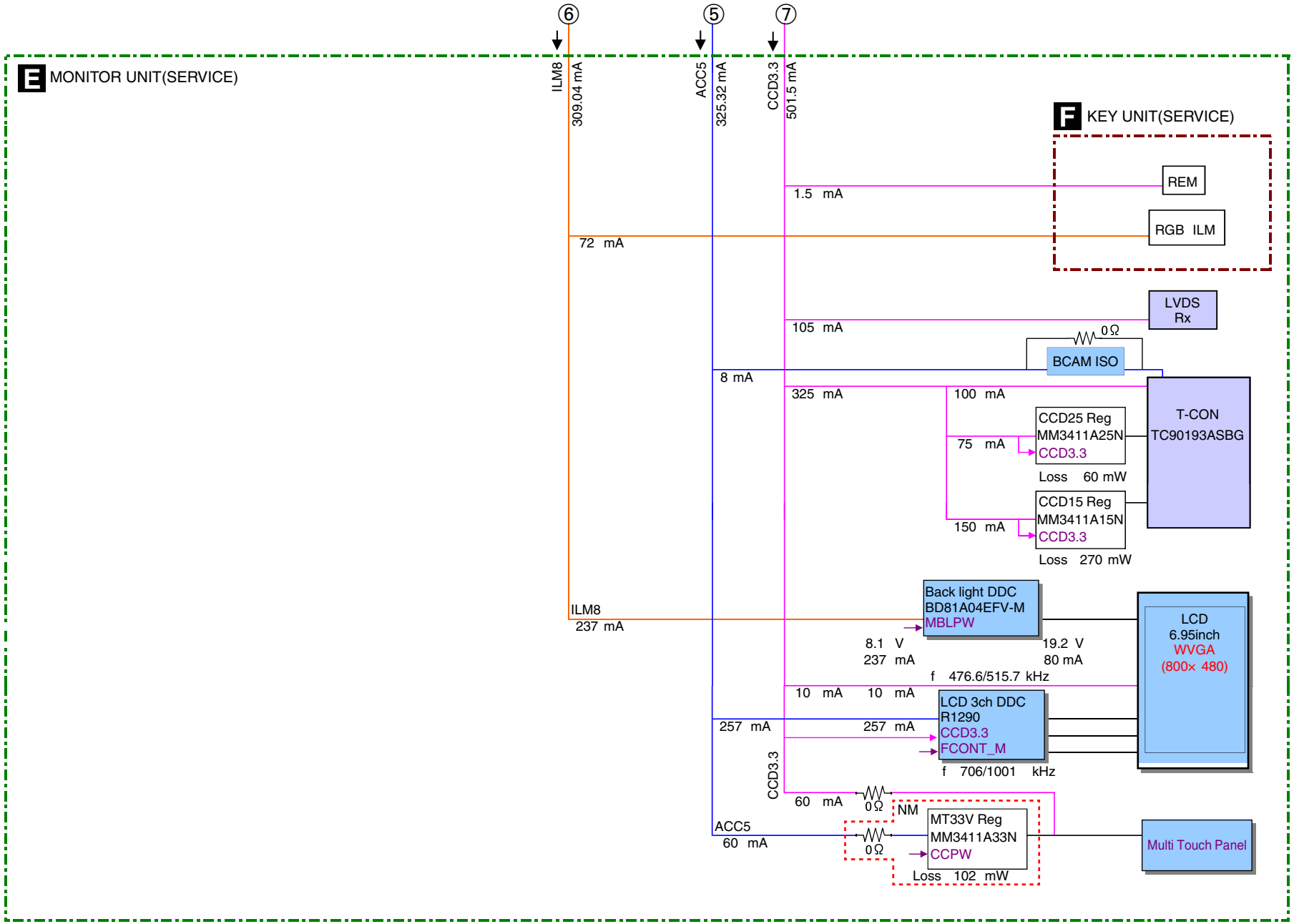
E MONITOR UNIT(SERVICE)
⑥
⑤
⑦
ILM8
309.04 mA
ACC5
325.32 mA
CCD3.3
501.5 mA
F KEY UNIT(SERVICE)
REM
RGB ILM
1.5 mA
72 mA
LVDS Rx
105 mA
0Ω
BCAM ISO
8 mA
325 mA
100 mA
T-CON
TC90193ASBG
CCD25 Reg
MM3411A25N
CCD3.3
75 mA
Loss 60 mW
CCD15 Reg
MM3411A15N
CCD3.3
150 mA
Loss 270 mW
Back light DDC
BD81A04EFV-M
MBLPW
ILM8
237 mA
8.1 V
237 mA
19.2 V
80 mA
f 476.6/515.7 kHz
LCD
6.95inch
WVGA
(800× 480)
10 mA
10 mA
LCD 3ch DDC
R1290
CCD3.3
FCONT_M
257 mA
257 mA
f 706/1001 kHz
CCD3.3
60 mA
0Ω
NM
MT33V Reg
MM3411A33N
CCPW
ACC5
60 mA
0Ω
Loss 102 mW
Multi Touch Panel

5. DIAGNOSIS

5.1 TROUBLESHOOTING

● TROUBLESHOOTING

Symptom	Check Point	Comments	Suspected Defective Unit
No Power	Check the Fuses and Power Supply.	Refer to "Fuse Check" and "Diagnosis of Back Light" on this manual.	AV Unit
No Back Light	Refer to "Diagnosis of Back Light" on this manual and check each check point.		AV Unit, IF Unit, Monitor Unit or LCD
Black Screen / White Screen / Vertical Lines In some cases, Key LEDs are lit. 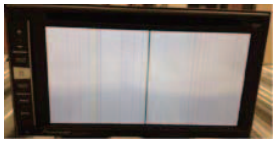	1. Check the FFC connection between Monitor Unit (CN2704) and IF Unit (CN8401). 2. Try to remove and re-insert above FFC (Both side of connectors).	Check whether FFC is not inserted completely to the connector (Slanting insertion). Check whether there is no foreign object in the connectors.	Slanting insertion of FFC 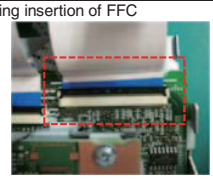 SOC Unit, Monitor Unit or LCD
Will not boot up. Opening screen is appeared but reset by itself.	Try to perform Self-Check Program in Test Mode.	If Test Mode check is ok, the Storage SD Card might be defective.	Storage SD Card or SOC Unit
Touch Panel does not responding.	Try to perform Touch Panel Test in Test Mode.		Touch Panel
"AMP Error" is displayed.	Check the speaker connection. If the speaker connection is no problem, check the check points on this manual.	DC offset is detected (Low active). Refer to "Diagnosis when AMP Error is displayed" on this manual. When Power AMP is defective, this error will not be displayed.	AV Unit
"Product overheat. System will be shut down automatically in 1minute." is displayed.	Try to restart the unit by ACC Off/On. If not solved, check the check points on this manual.	This error is displayed when SOC temperature is more than 95 degrees C. Refer to "Diagnosis when Product overheat is displayed" on this manual.	SOC Unit or Storage SD Card
No sound via speakers	Check RCA output.	Refer to "Audio Block Diagram" on this manual. If sound is output via RCA output, Power AMP might be defective.	Power AMP
No Sound	Check analog audio and digital audio.	Refer to "Audio Block Diagram" on this manual. If no sound for digital sound only, SOC Unit might be defective.	AV Unit (DSP,E-VOL) or SOC Unit
"Error-02" is displayed on Bluetooth related functions. Cannot use BT hands free call, BT audio etc.	Check Bluetooth version in Test Mode. If "ERROR!" or "NO_SET" is displayed, replace BT Module.		BT Module
No BT Microphone sound	Check the Microphone (cord) and Mic Jack.		Microphone (for Hands-free)

● ERROR MESSAGE

Message	Description	Check Point	Suspected Defective Unit
Software Error. Please contact your Pioneer Dealer or Pioneer Service Center. 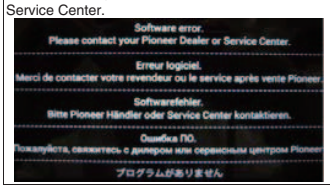	This error message will be displayed following cases. "Cannot access Storage SD card correctly." "Cannot be recognized Storage SD card." "There is no program in the Storage SD card."	Try to remove and re-insert the Storage SD Card several times.	Foreign object on the terminal of the Storage SD Card or the SD Card connector on IF Unit. *Storage SD *IF Unit

5.2 OPERATIONAL FLOWCHART

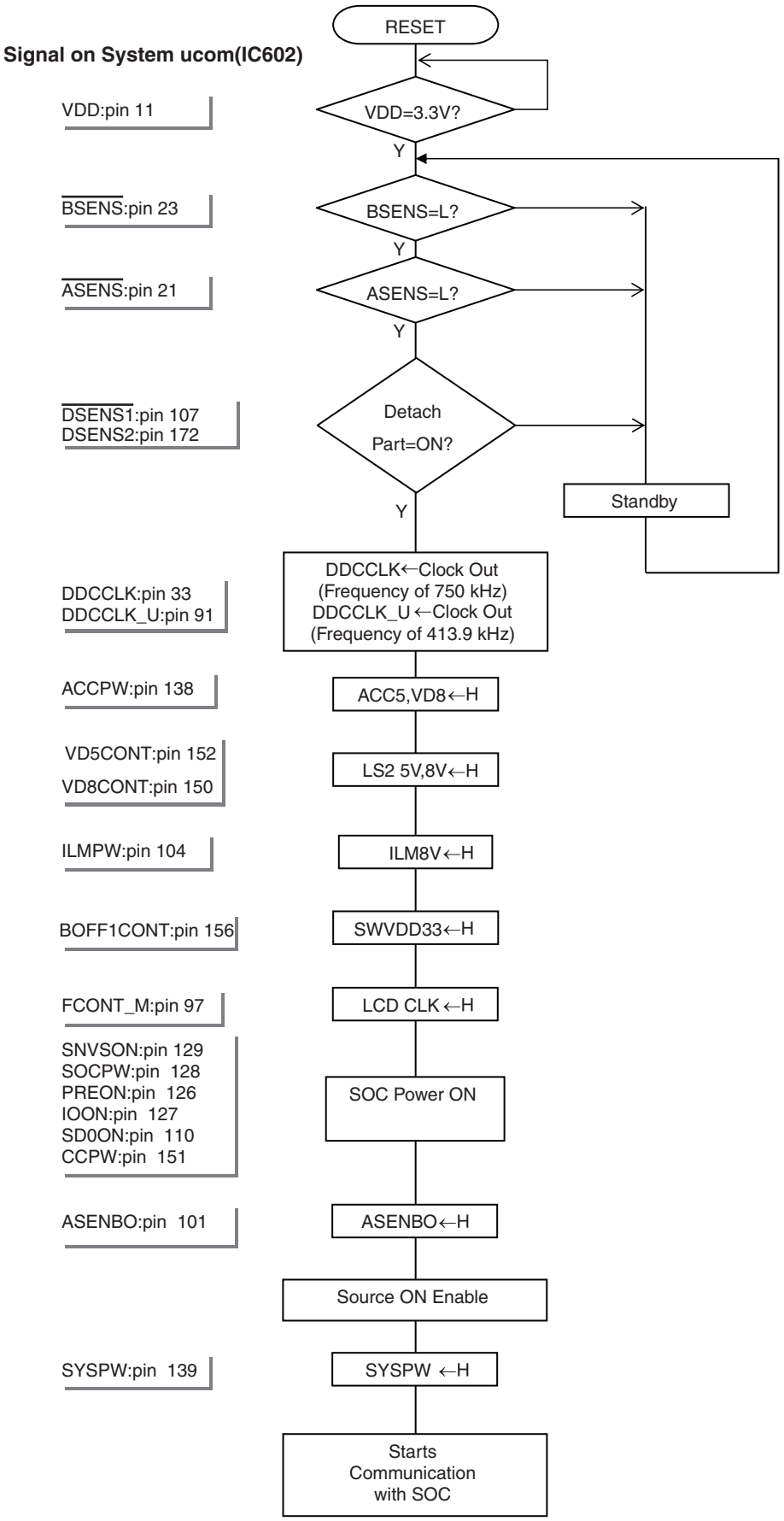

5.3 FUSE CHECK

FUSE CHECK LIST

UNIT		Reference No.	Parts No.	Function	Symptom when fuse cuts.
AV	Side A	P301(1.5 A)	CEK1282	1 Power supply(8.1V) for Flap Mecha.	1 Cannot move Flap Mecha.
		P2207(3.5 A)	CEK1343	1 Power supply(+B) for FAN. 2 Power supply(+B) for SiriusXM Tuner. 3 Power supply(+B) for USB.	1 Cannot move FAN. 2 Cannot recognize SiriusXM Tuner. 3 Cannot recognize USB.
		P2208(5.0 A)	CEK1346	1 Power supply for many circuit block. (Soc, DVD,LCD, Backlight, etc..)	1 Cannot boot product.

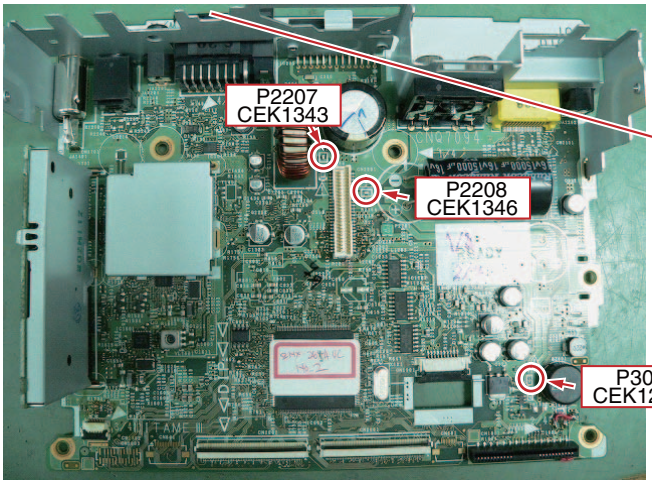

AV UNIT FUSE

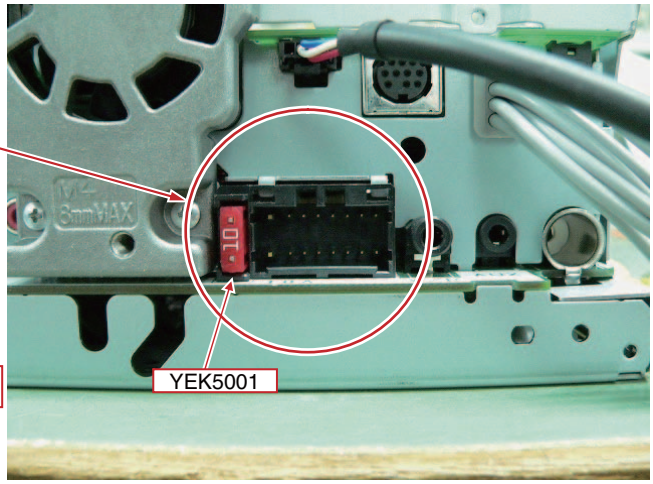

5.4 DIAGNOSIS OF BACK LIGHT

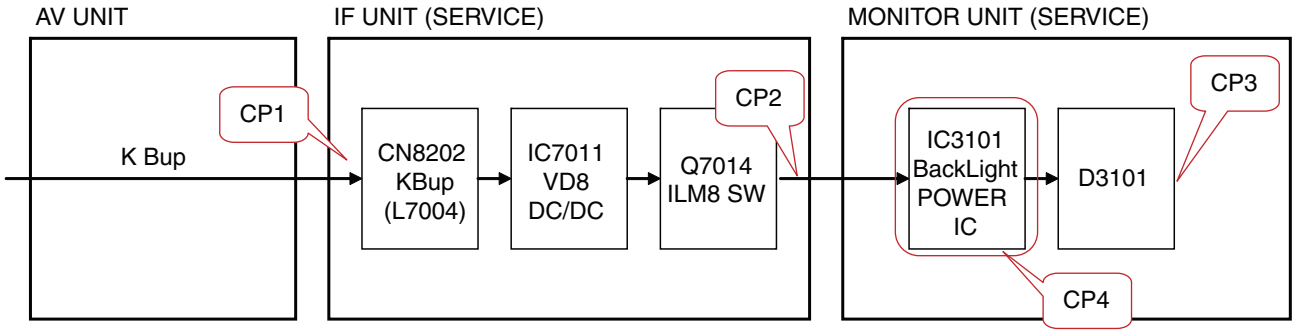

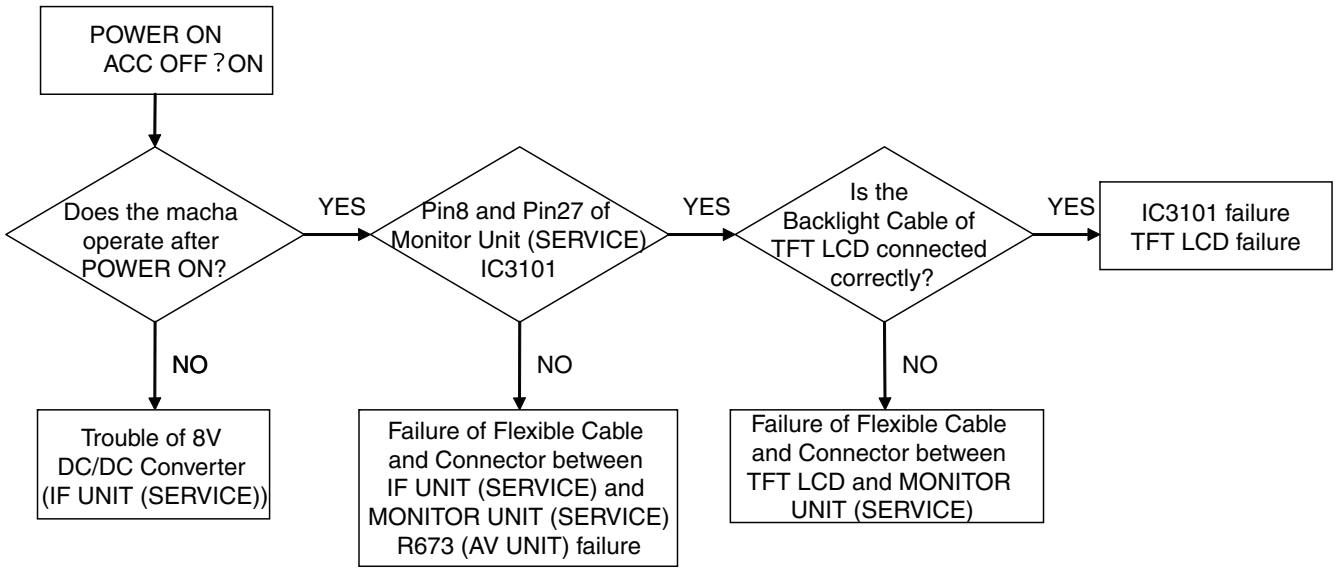

Confirm that CP1:L7004 (IF UNIT (SERVICE)) is 10.8V to 15.1V.

IF UNIT (SERVICE)(Side A)

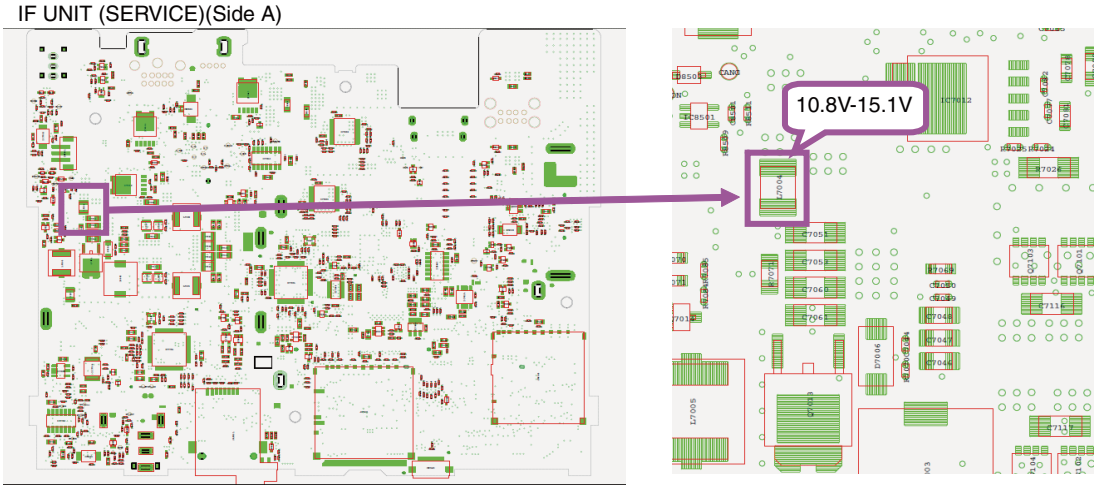

Confirm that the CP2:Q7014 collector (IF UNIT (SERVICE)) is 8V.

IF UNIT (SERVICE)(Side A)

Confirm that the CP3:D3101 cathode (MONITOR UNIT (SERVICE)) is 20V±2V.

MONITOR UNIT (SERVICE)(Side A)

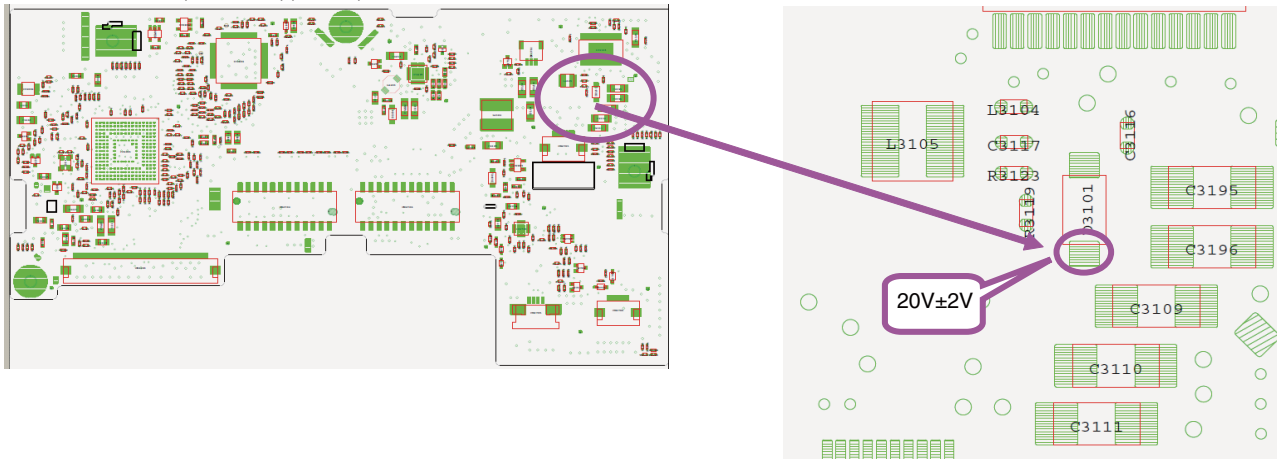

Confirm that CP4:Pin8 and Pin27 of IC3101 (MONITOR UNIT(SERVICE)) are 3.3V.

MONITOR UNIT (SERVICE)(Side A)

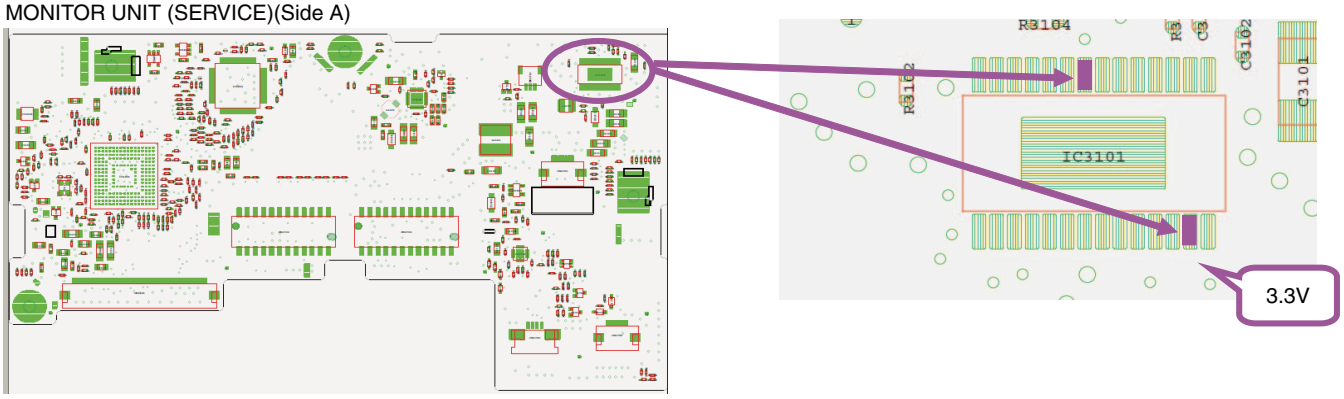

AV UNIT (Side B)

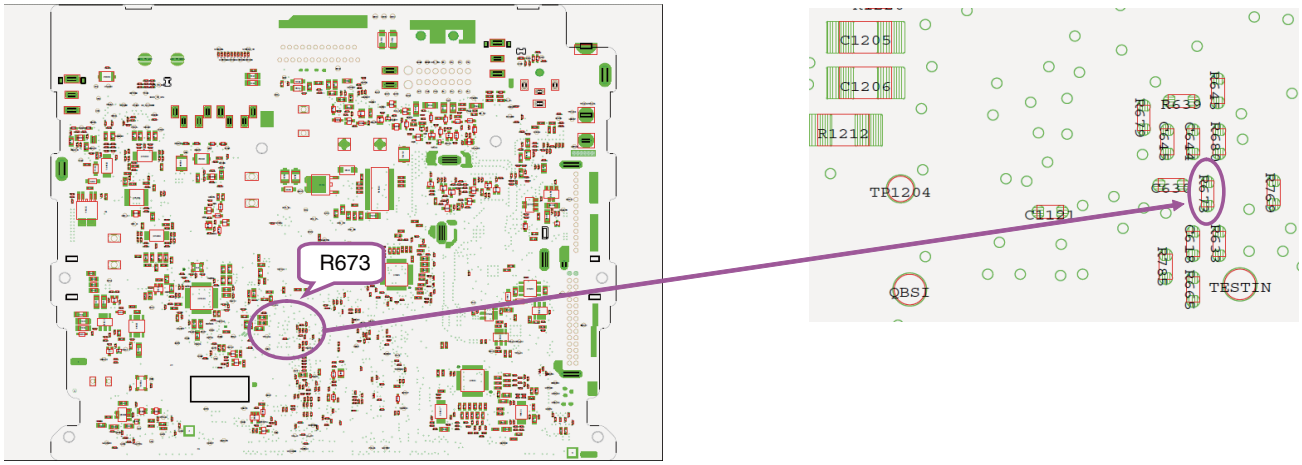

5.5 DIAGNOSIS FLOWCHART FOR DVD CORE UNIT

Refer to the DVD Mechanism Module Manual CX-3311(CRT5651).

5.6 FAN ROTATION CONTROL

Fan rotation is controlled depending on DVD mecha pickup and SOC Thermistor temperature.

Fan rotation control and DVD mecha pickup temperature

Rotation Control			DVD mecha pickup Temperature
Stop	->	Low speed	63 degrees C or more
Stop or Low speed	->	High speed	79 degrees C or more
High speed	->	Low speed	74 degrees C or less
Low or High speed	->	Stop	50 degrees C or less

Fan rotation control and SOC Thermistor temperature

Rotation Control			SOC Thermistor Temperature
Stop	->	Low speed	68 degrees C or more
Stop or Low speed	->	High speed	85 degrees C or more
High speed	->	Low speed	70 degrees C or less
Low or High speed	->	Stop	53 degrees C or less

5.7 DIAGNOSIS WHEN AMP ERROR OR PRODUCT OVERHEAT IS DISPLAYED

■ Point to be checked when AMP ERROR is displayed

1. Check the amp input line and confirm that there is no short-circuit with the other patterns.

AV UNIT (Side B)

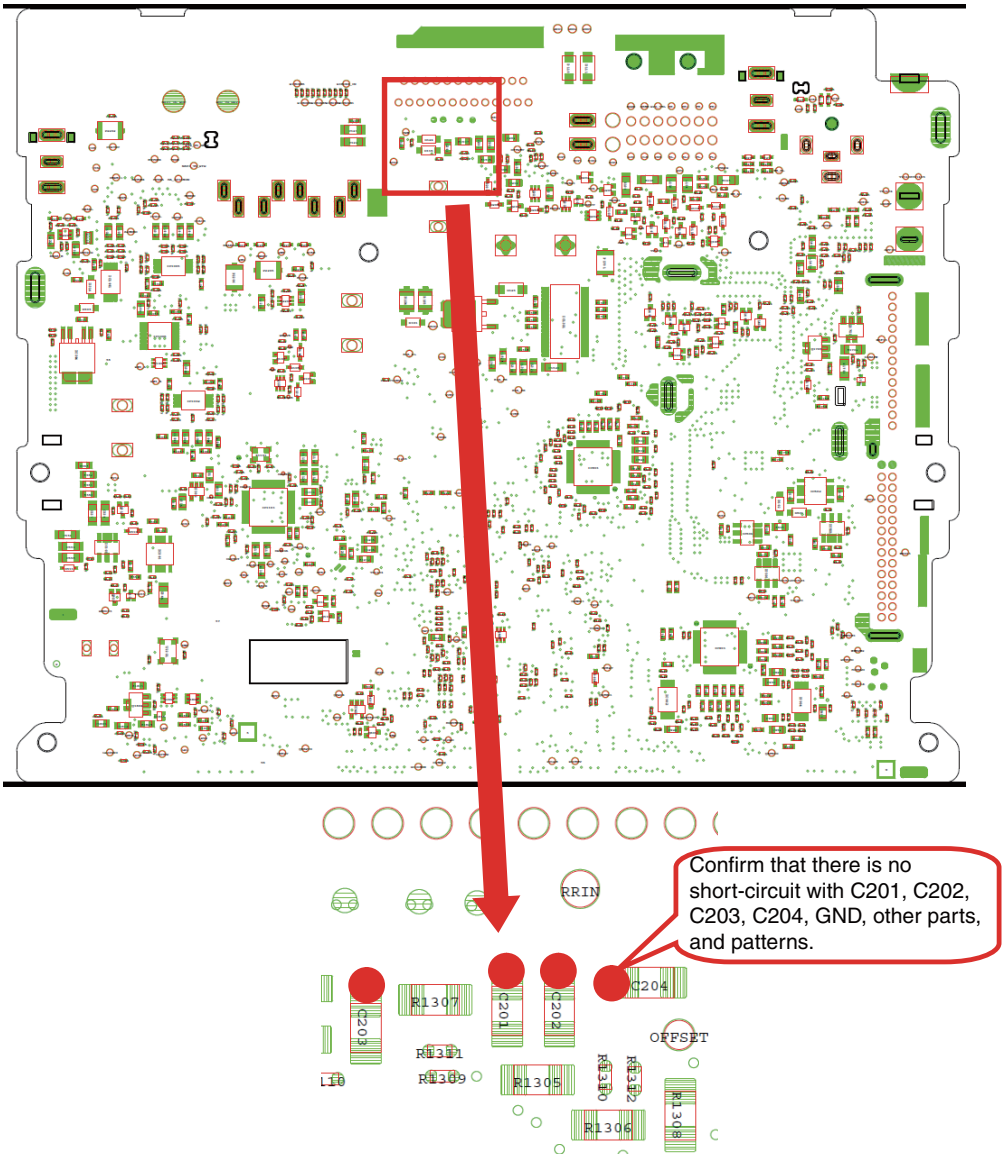

2. Check the OFFSET detection signal line and confirm that there is no incorrectly mounted part, or short-circuit with the other patterns.
   Confirm that SYSCON 92Pin is DC3.3V, when voice is turned off.
   If not so, confirm that R727 is incorrectly mounted, and the OFFSET signal line is not short-circuited with the other parts and patterns.

■ Point to be checked when Product Overheat is displayed

1. Confirm that the following parts are mounted on the Soc Single Core Unit correctly.
   R4317, R4381, TH4381, R5006

2. Confirm that the following parts are mounted on the IF Unit (SERVICE) correctly.
   R7342

3. Confirm voltage of the following SYSCOM Pin on the AV Unit.
   Confirm that Pin171 is not short-circuited with the neighbor Pin.

4. When Product Overheat is displayed, and recovery is failed even by ACC OFF => ON:
   Soc may have another problem.
   Change the SD Card and the SOC Single Core Unit, and Confirm the trouble detail.

5.8 INSPECTION METHOD OF PICKUP UNIT

Disc to be used

CD-DA : TCD-782
DVD-Video : TDV-582(GGV1025)

Exact judgment cannot be performed if the disc to be used has a crack and dirt.
Be careful of handling of a disc enough.

Execution method

Refer to next page for the details of the check 1 and the check 2.

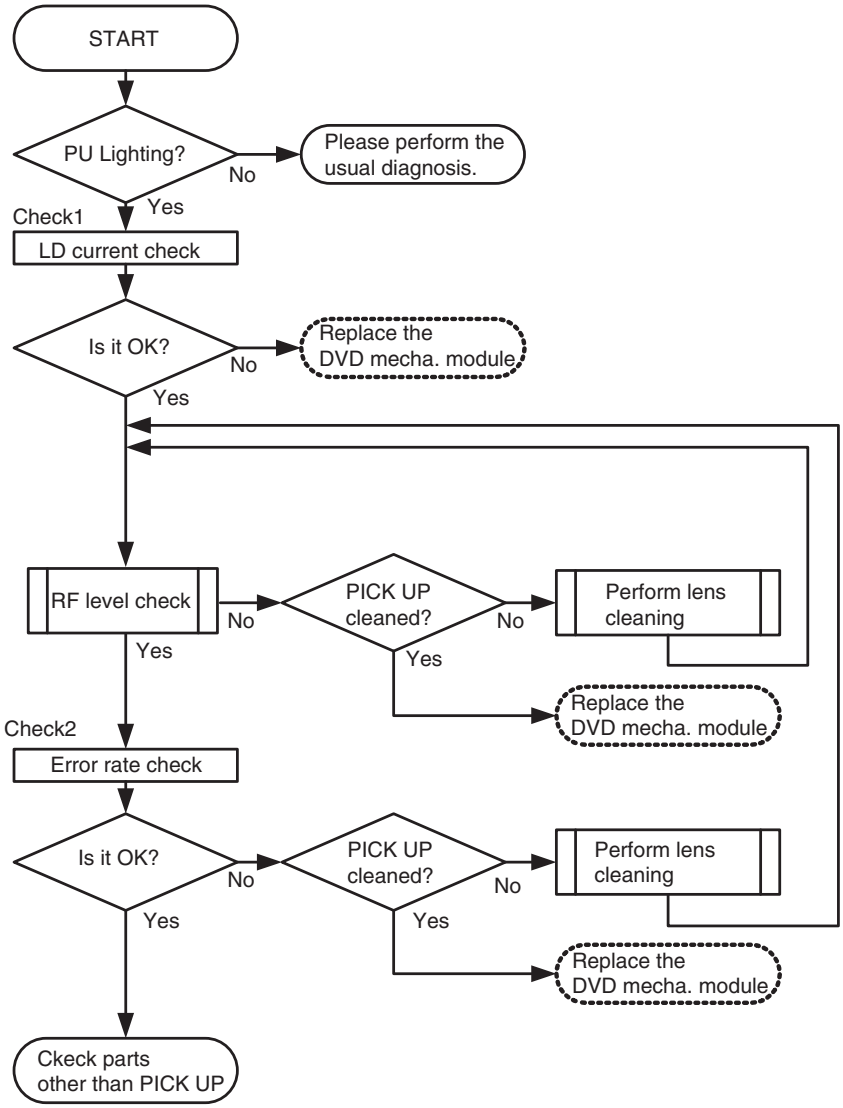

Check1 : LD current check

<Check>
Status: [Foucs closed] of TEST MODE

No.	Disc	Check Point	Threshold	Remarks: LD current
1	GGV1025	DVDLD1 - VCC5_PU	120 - 780 (mV)	10 - 65 (mA)

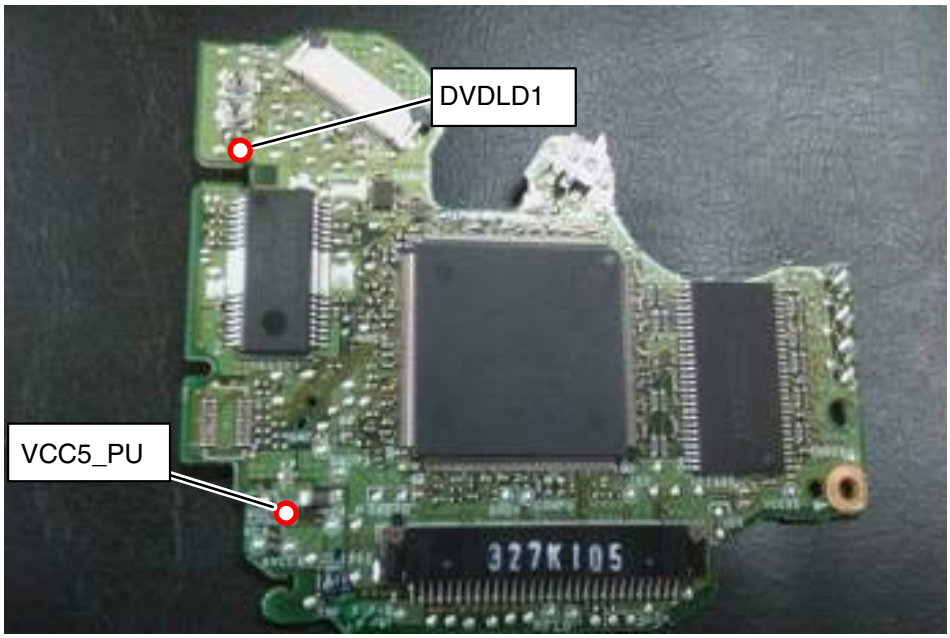

No.	Disc	Check Point	Threshold	Remarks: LD current
2	TCD-782	CDLD1 - VCC5_PU	150 - 900 (mV)	10 - 60 (mA)

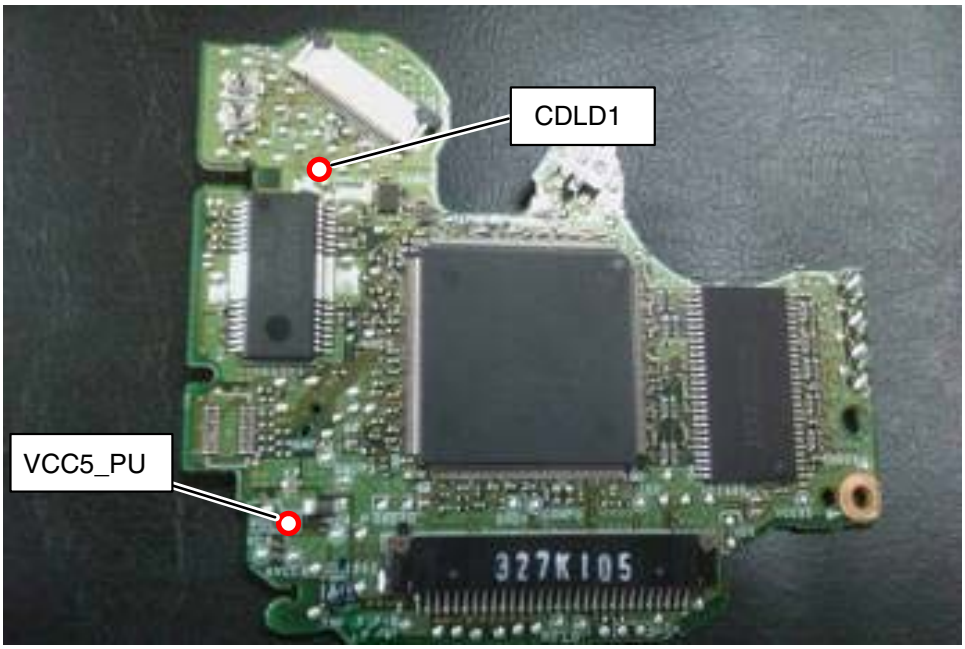

Notes: Please pay attention to the laser diode damage by static electricity.

Check : RF level

<Check>
ASMAX value shows the value of RF level.
Status: [Foucs closed] of TEST MODE

No.	Disc	Check Point	Threshold	Remarks
1	GGV1025	8 digits value of ASMAX on display	More than 0000 0B00	
2	TCD-782	8 digits value of ASMAX on display	More than 0000 0E00	

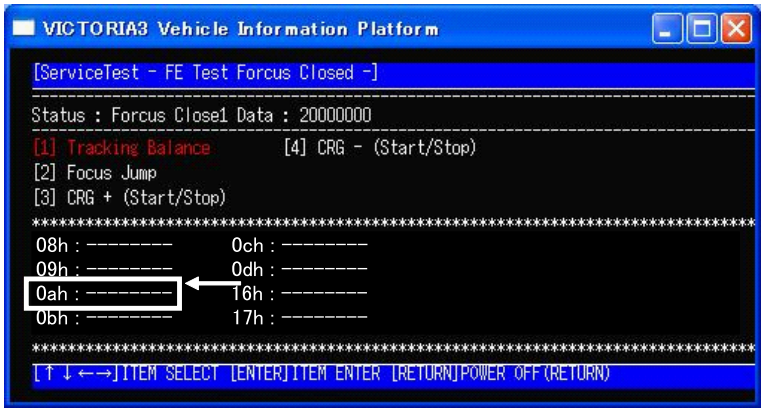

Check2 : Error rate check

<Check>
Status: [Tracking Closed] of TEST MODE

No.	Disc	Check Point	Threshold	Remarks
1	GGV1025	ID:40000	Less than 1.000E-3	
2	GGV1025	ID:200000	Less than 1.000E-3	
3	TCD-782	ID:HOME Position	Less than 2.500E-3	

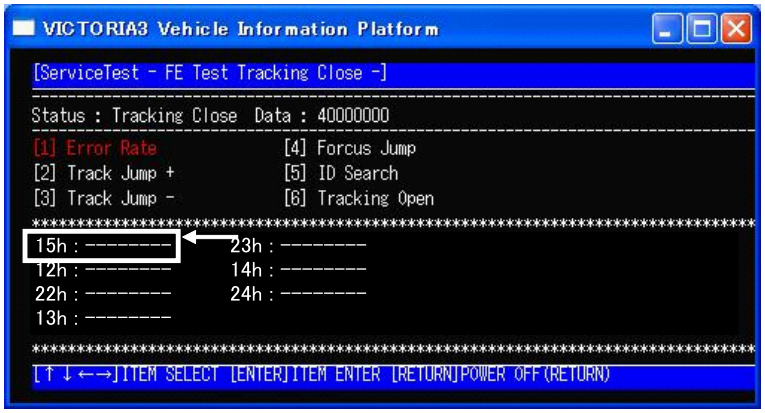

5.9 ERROR CODE LIST

Common

Error Code & Message	Description
AMP Error	AMP Error protection is activated. (DC detection / Protection)
Product overheat. System will be shut down automatically in 1 minute.	The temperature is too high for this product to operate.

iPod

Error Code & Message	Description
ERROR-02-60	Communication Error during iPod Authentication
ERROR-02-61	iPod Authentication Data Error
ERROR-02-67	The iPod firmware version is old.
ERROR-02-6B	Communication Error (Time out / Communication failed)

Pandora

Error Code & Message	Description
Error-19	Communication failed.
Check Device	Device error message displayed in Pandora application.
Incompatible USB	The connected USB storage device is not supported by this product.
Check USB	Overcurrent Error

Bluetooth

Error Code & Message	Description
ERROR-02	Boot Error of the Bluetooth Module
ERROR-03	Fatal Error after boot (Required Bluetooth Module Reset)
ERROR-10	The power failed for Bluetooth Module
ERROR-14	BT Service abnormality shut down

USB, SD

Error Code & Message	Description
Unplayable File	Unplayable File
Incompatible USB	Incompatible USB
Incompatible SD	Incompatible SD
Check USB	Overcurrent Error
HUB Error	USB hub is connected. This product is not supported USB hub.
No Response	There is no response from the connected USB storage device.

SiriusXM Satellite Radio

Error Code & Message	Description
Check Antenna	Antenna connection is incorrect.
Check Tuner	SiriusXM Connect Vehicle Tuner connection is incorrect.
No Signal	SiriusXM Connect Vehicle Tuner cannot receive SiriusXM satelite signal.

DVD

Error Code & Message	Description
Unplayable Disc	Media Error (Disc containing the unplayable format only.)
Different Region Disc	Region Code Error
Protect	DRM Error (All the files on the inserted disc are embedded with DRM.)
TEMP	Temp Error (Playback is stopped because the pick up temperature is 89°C or higher.)
ERROR-02-99	Read Error (Transfer Start Error)
ERROR-02-90	Focus Error
ERROR-02-9E	Focus Error during set up (Focus has never been achieved with that disc.)
ERROR-02-80	Address not found (Invalid Track)
ERROR-02-91	Spindle lock NG (Disc cannot be rotated.)
ERROR-02-92	Carriage home NG (Pick up tries to return to carriage home, but it cannot go back and stopped.)
ERROR-02-94	ID/SUBCODE Read Error (ID/SUBCODE cannot be read due to scratch or stain.)
ERROR-02-9A	AV CHIP decode NG (AV chip cannot be decoded.)
ERROR-02-9B	AV CHIP recovery NG
ERROR-02-9C	Playback State Error (An error due to software bug.)
ERROR-02-9D	Disc Data NG
ERROR-02-A0	REQUEST Error
ERROR-02-A1	Failure in issuing the read command
ERROR-02-A2	L0 adjustment is NG
ERROR-02-A3	L1 adjustment is NG
ERROR-02-A4	LD system NG
ERROR-02-A5	Gain adjustment system NG
ERROR-02-A6	Gain determining system NG
ERROR-02-A7	Servo initial setting related items NG
ERROR-02-A8	Disc unclamped
ERROR-02-A9	Tracking system NG
ERROR-02-AA	Media setting system NG
ERROR-02-AB	JUMP over layers NG
ERROR-02-B0	Navigation Command Error
ERROR-02-B1	Retry Over
ERROR-FF-FF	Undefined Error

5.10 CONNECTOR FUNCTION DESCRIPTION

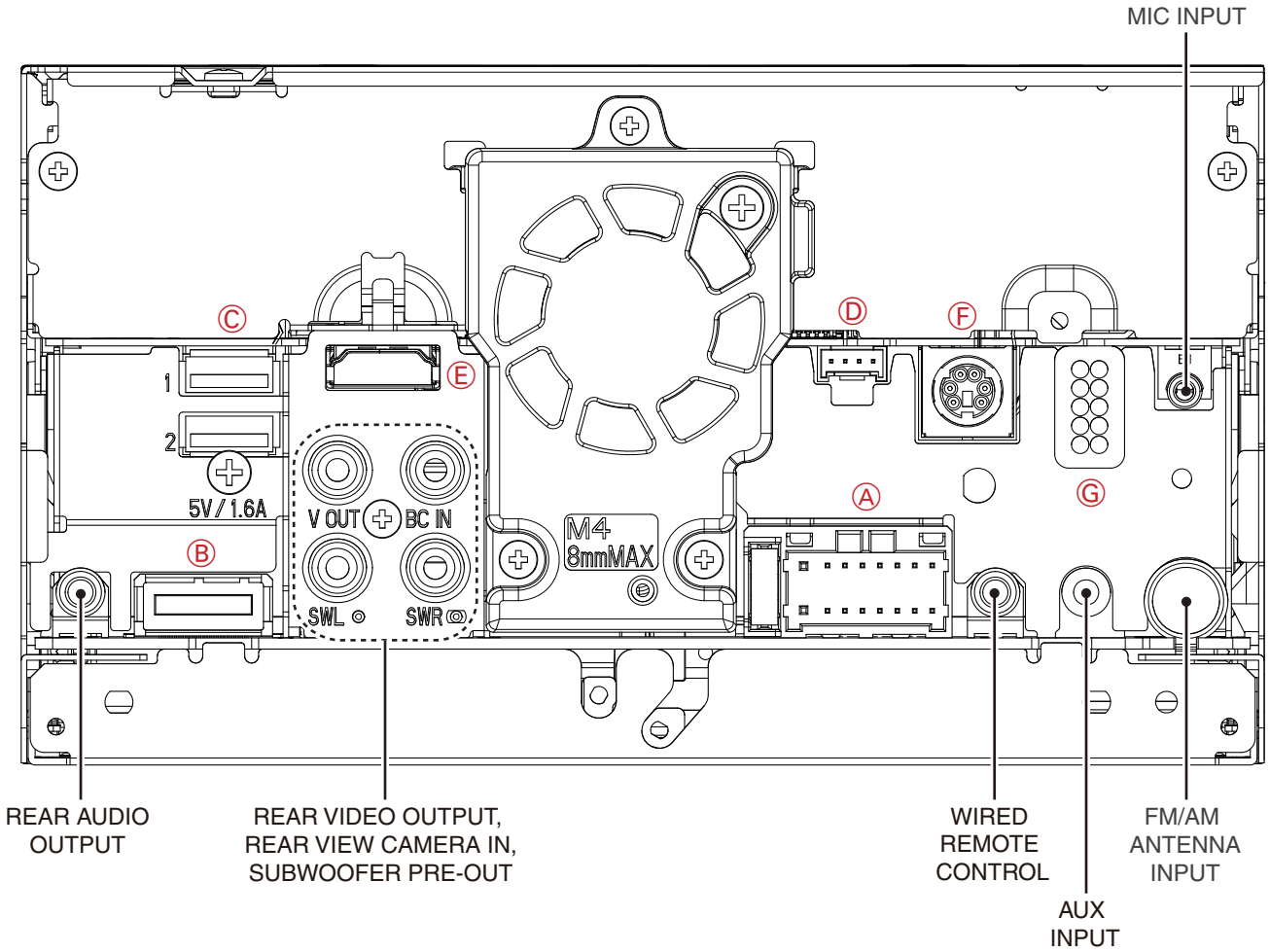

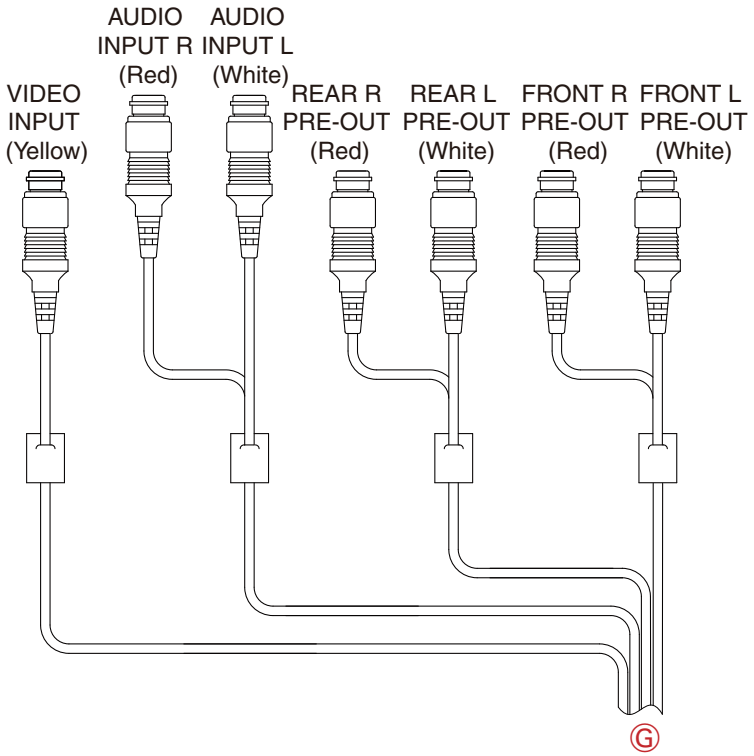

Ⓐ Power connector

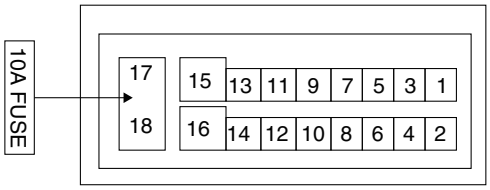

	terminal name		terminal name
1	FL+	2	FR+
3	FL-	4	FR-
5	RL+	6	RR+
7	RL-	8	RR-
9	PKB	10	TELMUTE
11	ILM	12	BREM
13	ACC	14	REV
15	BUP	16	GND
17	BUP	18	BUP

Ⓑ RGB Input

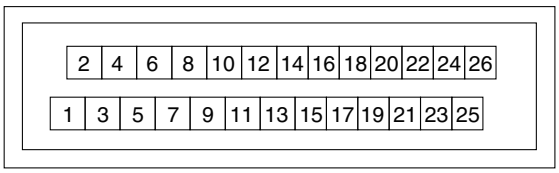

	terminal name		terminal name
1	CCR	14	ONSEI-
2	CCG	15	NC
3	CCB	16	EXTOMX
4	CCSYNC	17	MXTOEX
5	GNDSIG	18	HYOKA
6	NC	19	DSEN
7	NC	20	TVON
8	NC	21	GUIDEON
9	ASENBO	22	MONON
10	CCAUL	23	NC
11	CCAUR	24	SISTONAVI
12	GNDAU	25	NAVITOSYS
13	ONSEI+	26	GNDD

Ⓒ USB (2ports)

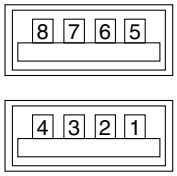

	terminal name		terminal name
1	USB5V	5	USB5V
2	USB D-	6	USB D-
3	USB D+	7	USB D+
4	GND	8	GND
GNDE	GND	GNDE	GND

Ⓓ iData Link (XNUC only)

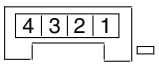

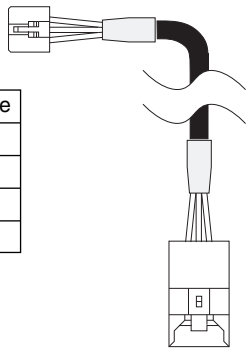

	terminal name
1	SOTOID
2	IDTOSO
3	GND
4	NC

Ⓔ HDMI

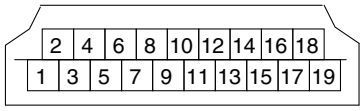

	terminal name		terminal name
1	DATA2+	2	DATA2 GND
3	DATA2-	4	DATA1+
5	DATA1 GND	6	DATA1-
7	DATA0+	8	DATA0 GND
9	DATA0-	10	CLOCK+
11	CLOCK GND	12	CLOCK-
13	CEC	14	NC
15	SCL	16	SDA
17	CEC GND	18	+5V
19	HOTPLUG	GNDE	GND

Ⓕ Sirius-XM (XNUC only)

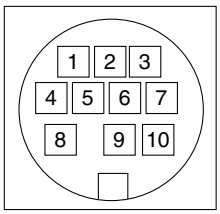

	terminal name
1	AUDIO_L
2	TUNER_TX
3	RESERVED
4	AUDIO_R
5	GND_A
6	TUNER_RX
7	RESERVED
8	GND_D
9	POWER
10	PWREN
GNDE	GND

CAN-BUS adaptor cable (XNEU5, XNUR only)

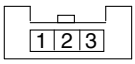

	terminal name
1	SOTOCAN
2	CANTOSO
3	GND

6. SERVICE MODE

6.1 TEST MODE

[How to enter Service Test Mode]

1. Download GGS1152 from the Pioneer Service Site.
2. Decompress the file.
3. Copy the decompressed file to the root directory of USB memory.
4. Connect the USB memory to USB Port1 of the unit and turn ACC ON.

[Test Mode Menu]

● Allocation of Key Operation

VOLUME+	: Selection cursor up
VOLUME-	: Selection cursor down
FORWARD	: Page change (next page)
REVERSE	: Page change (previous page)
HOME	: Enter the selected item

● Test Mode Menu Item

Test Mode Menu [1/5]

```
Test Mode Menu                          [Service]  [1 / 5]

 1. Version Information
 2. Write Program Forcedly
 3. Error History
 4. File Maintenance
 5. Drive Maintenance
 6. Initialize User Area
 7. Clear Sensor Data

[VOL+/-]SELECT [REV/FWD]PAGE [HOME]ENTER
```

No.	Test Mode Item	Description
1	Version Information	Display software version of each program. This item can check communication between SOC and each device.
2	Write Program Forcedly	For re-writing program
3	Error History	Not used for service
4	File Maintenance	Not used for service
5	Drive Maintenance	Not used for service
6	Initialize User Area	Clear Application User Data and Bluetooth Settings
7	Clear Sensor Data	Not used on this model

※ The underlined blue texts are linked to detail description page.

Test Mode Menu [2/5]

```
Test Mode Menu                                  [Service]  [2 / 5]

 8. Self-Check Program
 9. Touch Panel Test
10. Key Test
11. Wired Remote Control Test
12. Learning Wired Remote Control Test
13. Port Test
14. Asynchronous Serial Port Test
15. RGB Illumination Test
16. Monitor Test
17. Graphics Test

[VOL+/-]SELECT [REV/FWD]PAGE [HOME]ENTER
```

No.	Test Mode Item	Description
8	Self-Check Program	Display connection status between SOC and each device.
9	Touch Panel Test	For checking the Touch Panel Operation
10	Key Test	For checking the Hard Key Operation
11	Wired Remote Control Test	For checking the Wired (Steering) Remote Control Operation Display the key code
12	Learning Wired Remote Control Test	For checking the Learning Wired Remote Control Operation Display the voltage value of key input
13	Port Test	Not used for service
14	Asynchronous Serial Port Test	Not used for service
15	RGB Illumination Test	For checking the key LEDs
16	Monitor Test	For Touch Panel Calibration and Flicker Adjustment Please refer to 8.3 TOUCH PANEL TEST AND ADJUSTMENT. Please refer to 8.2 FLICKER ADJUSTMENT.
17	Graphics Test	For checking the Display Function Display various images

Test Mode Menu [3/5]

```
Test Mode Menu                                  [Service]  [3 / 5]

18. GPS Information
19. Sensor Test
20. System Time Test
21. External Connection Test
22. Temperature Sensor Test
23. Fan Control Test

[VOL+/-]SELECT [REV/FWD]PAGE [HOME]ENTER
```

No.	Test Mode Item	Description
18	GPS Information	Not used on this model
19	Sensor Test	Not used on this model
20	System Time Test	Not used on this model
21	External Connection Test	Display the status of leads.
22	Temperature Sensor Test	Display the temperature information of SOC and Monitor Unit.
23	Fan Control Test	For checking the Fan rotation

Test Mode Menu [4/5]

```
Test Mode Menu                          [Service]  [4 / 5]

24. SD Test
25. Storage SD Test
26. Bluetooth Line Test

[VOL+/-]SELECT [REV/FWD]PAGE [HOME]ENTER
```

No.	Test Mode Item	Description
24	SD Test	Write/Read test of SD Card
25	Storage SD Test	Not used for service
26	Bluetooth Line Test	For checking the Hands-free audio line

Test Mode Menu [5/5]

```
Test Mode Menu                          [Service]  [5 / 5]

27. HD Radio Data Test
28. RDS-TMC Test
29. DTV [OneSeg] Test
30. Audio Test
31. Audio Test for Production
32. Product Information
33. Write Product Information
34. Device Number

[VOL+/-]SELECT [REV/FWD]PAGE [HOME]ENTER
```

No.	Test Mode Item	Description
27	HD Radio Data Test	For checking the communication line between SOC and HD Radio Tuner (UC model only)
28	RDS-TMC Test	Not used on this model
29	DTV[OneSeg] Test	Not used on this model
30	Audio Test	Not used for service
31	Audio Test for Production	For checking the audio line Front, Rear and Guide audio line can be tested.
32	Product Information	Not used for service
33	Write Product Information	Not used for service
34	Device Number	For Re-Writing Device Number (UC model only) Please refer to 8.4 DEVICE NUMBER REWRITING.

1. Version Information

● Outline

SOC obtains version information from each data storage device and displays the information on screen.
This test mode item can be used for communication check.
When the communication is failed, **"ERROR!"** is displayed.

● Allocation of Key Operation

FORWARD : Page change (next page)
REVERSE : Page change (previous page)
MODE : Return to Main Menu

● Description

Version Information [1/2]

```
Version Information                                  [1 / 2]

    Project Number          : KM612
    Model Number            : AVH-X8800BT/EU5
    Number of Cores         : 1
    Flash ROM Part Code     : CWJ1234-
    Bootloader              : 1.000000
    Storage SD              : CVJ1234-B PJDZ3-1-A
    Recovery Platform       : 1.000000
    Boot                    : 1.000000
    Platform                : 1.000000

[REV/FWD]PAGE [MODE]BACK
```

Version Information [2/2]

```
Version Information                                  [2 / 2]

    System uCom             : CVJ1235-B 08.01
    Bluetooth               : HW01-SW03.21.30
    GPS/Sensor              : NO_SET
    Mecha Information       : FF
    Mecha uCom              : 03.01.08.02
    Region Code             : 2
    WWR                     : NO_SET
    DTV OneSeg (SDK)        : NO_SET
    DTV OneSeg (IF)         : NO_SET

[REV/FWD]PAGE [MODE]BACK
```

Item	Version Number	Data Storage Device
Project Number	(See Information list)	System uCom
Model Number	(See Information list)	System uCom
Number of Cores	(See Information list)	SOC
Flash ROM Part Code	CWJ****-	Flash ROM on SOC Unit
Bootloader	*.******	Flash ROM on SOC Unit
Storage SD	(See Information list)	Storage SD
Recovery Platform	1.******	Storage SD
Boot	1.******	Storage SD
Platform	1.******	Storage SD
System uCom	CVJ****-* 08.**	System uCom
Bluetooth	HW**-SW**.**.**	Bluetooth Module
GPS/Sensor	CWW****- 01.**.** CWJ****- 01.**.**	Sensor Unit
Mecha Information	FF	DVD Core Unit
Mecha uCom	03.01.08.**	DVD Core Unit
Region Code	(See Information list)	DVD Core Unit
WWR	(See Information list)	WWR Tuner Module
DTV OneSeg (SDK)	(See Information list)	DTV Module
DTV OneSeg (IF)	(See Information list)	DTV Module

● **Information List by Model**

	AVH-X8800BT/XNEU5	AVH-X8800BT/XNUR	AVH-4200NEX/XNUC	AVH-X8850BT/XNRC
Project Number	KM612	KM612	KM613	KM612
Model Number	AVH-X8800BT/EU5	AVH-X8800BT/UR	AVH-4200NEX/UC	AVH-X8850BT/RC
Number of Cores	1	1	1	1
Storage SD	CVJ****-* PJDZ3-1-*	CVJ****-* PJDZ3-1-*	CVJ****-* PJDZ3-1-*	CVJ****-* PJDZ3-1-*
Region Code	2	5	1	3
WWR	NO_SET	NO_SET	*.**	NO_SET
DTV OneSeg (SDK)	NO_SET	NO_SET	NO_SET	NO_SET
DTV OneSeg (IF)	NO_SET	NO_SET	NO_SET	NO_SET

	AVH-X8850BT/XNRD	AVH-X8850BT/XNRI	AVH-X8890BT/XNID
Project Number	KM612	KM612	KM612
Model Number	AVH-X8850BT/RD	AVH-X8850BT/RI	AVH-X8890BT/ID
Number of Cores	1	1	1
Storage SD	CVJ****-* PJDZ3-1-*	CVJ****-* PJDZ3-1-*	CVJ****-* PJDZ3-1-*
Region Code	4	2	5
WWR	NO_SET	NO_SET	NO_SET
DTV OneSeg (SDK)	NO_SET	NO_SET	NO_SET
DTV OneSeg (IF)	NO_SET	NO_SET	NO_SET

NO_SET: The model does not have a function or information is not set.
ERROR!: The acquisition of the version information results in failure (abnormal).

Return to Top Menu

2. Write Program Forcedly

● Outline

Programs can be updated forcedly.
The updating program item is selected from the menu.

● Preparation

Insert USB or SD in which the program file to be used for forced writing is stored.
Make sure to store the program file in USB or SD in the following configuration.

```
[SD/USB]
  ├ AVICAVH16
      ├ *.* [Various types of program files]
```

● Allocation of Key Operation

VOLUME+	: Selection cursor up
VOLUME-	: Selection cursor down
FORWARD	: Media selection/Next page
REVERSE	: Media selection/Previous page
HOME	: Enter/Start writing
MODE	: Return to previous screen

● Description

Write Program Forcedly Menu [1/2]

```
Write Program Forcedly                          [1 / 2]

  1. Write Programs
  2. Write Bootloader
  3. Write Boot
  4. Write Recovery Platform
  5. Write Platform
  6. Write Opening Data
  7. Copy Device
  8. Copy Script

[VOL+/-]SELECT [REV/FWD]PAGE [HOME]ENTER [MODE]BACK
```

Write Program Forcedly Menu [2/2]

```
Write Program Forcedly                          [2 / 2]

  9. Write System uCom
 10. Write Bluetooth
 11. Write GPS/Sensor
 12. Write DTV
 13. Write WWR

[VOL+/-]SELECT [REV/FWD]PAGE [HOME]ENTER [MODE]BACK
```

1. Write Programs	: Programs of various types including Bootloader, Platform, can be automatically written. Note: It is necessary to store all program files in USB or SD.
2. Write Bootloader	: Bootloader program can be written to FLASH. (Not used for service)
3. Write Boot	: Boot program can be written to Storage SD. (Not used for service)
4. Write Recovery Platform	: Recovery Platform program can be written to Storage SD. (Not used for service)

5. Write Platform : Platform program can be written to Storage SD. (Not used for service)
6. Write Opening Data : Opening screen data can be written to FLASH.
7. Copy Device : Copy from external media to Storage SD. (Not used for service)
8. Copy Script : Copy data by execution of shell script in USB1. (Not used for service)
9. Write System uCom : Program can be written to System uCom.
10. Write Bluetooth : Program can be written to Bluetooth Module.
11. Write GPS/Sensor : Program can be written to GPS/Sensor Unit.
12. Write DTV : Program can be written to DTV Module.
13. Write WWR : Program can be written to WWR Tuner Unit.

How to write the program

After selecting the item on menu screen, Sub Menu Screen is displayed.
Select SD or USB which writing program is stored, then press [HOME] button to start writing program.

Example of Sub Menu Screen (Write Programs)

```
Write Program Forcedly

1.SD    2.USB

           SD          ->    GPS/Sensor       Progress
PJ16OGPS [  --.--.--   ]   [  --.--.--   ]   [        ]
           SD          ->    NOR Image        Progress
PJ16OBTL [  -.------   ]   [  -.------   ]   [        ]
           SD          ->    Storage SD       Progress
PJ16OBOT [  -.------   ]   [  -.------   ]   [        ]
PJ16OREC [  -.------   ]   [  -.------   ]   [        ]
PJ16OPLT [  -.------   ]   [  -.------   ]   [        ]

[REV/FWD]Select Media [HOME]ENTER [MODE]BACK
```

- **Display during update**
  The percentage is displayed for the Progress field.
  "Updating. Please don't turn the power off." is displayed.
- **Display when the updating is completed.**
  "100%" is displayed for the Progress field.
  "Update completed. Please restart." is displayed.
- **Display when the updating is failed.**
  "Update Failed" is displayed.

Return to Top Menu

6. Initialize User Area

● Outline

Application User Data, Bluetooth Settings/registered information can be initialized.
It is necessary to press [RESET] button, or +B OFF and wait more than 5 minutes for resetting some of the settings.

● Allocation of Key Operation

HOME & MODE : Start initialization
MODE : Return to Main Menu

● Description

```
Initialize User Area

 1. Bluetooth [ -- ]
 2. User Area [ -- ]



    Bluetooth cannot be tested after initialization.



[HOME&MODE]INITIALIZE [MODE]BACK
```

To start initialization, press [HOME] and [MODE] button simultaneously.

```
Initialize User Area

 1. Bluetooth [ OK ]
 2. User Area [ OK ]



       Please turn the power off to test Bluetooth.



                         [MODE]BACK
```

When initialization is completed, this screen is displayed.
After initialization is done, it is necessary to restart the unit.
Otherwise Bluetooth related test will be NG when execute the test.

Return to Top Menu

8. Self-Check Program

● Outline

This test is for checking the connection status between SOC and each device.
SOC obtains version information or register data from each device and displays the result on screen.

● Allocation of Key Operation

MODE : Return to Main Menu

● Description

```
Self-Check Program

 1. Storage SD            [ Connected ]
 2. System uCom           [ Connected ]
 3. Bluetooth             [ Connected ]
 4. GPS/Sensor            [ ---------- ]
 5. Mecha uCom            [ Connected ]
 6. iPod Certification IC [ Connected ]

[MODE]BACK
```

[Connected] : Communication check is OK.
[!!ERROR!!] : Communication check is NG. There is a possibility that the target device is defective.
[---------] : The model does not have the target device.

Return to Top Menu

9. Touch Panel Test

● Outline

This test is for checking the Touch Panel Operation.

● Allocation of Key Operation

MODE : Return to Main Menu

● Description

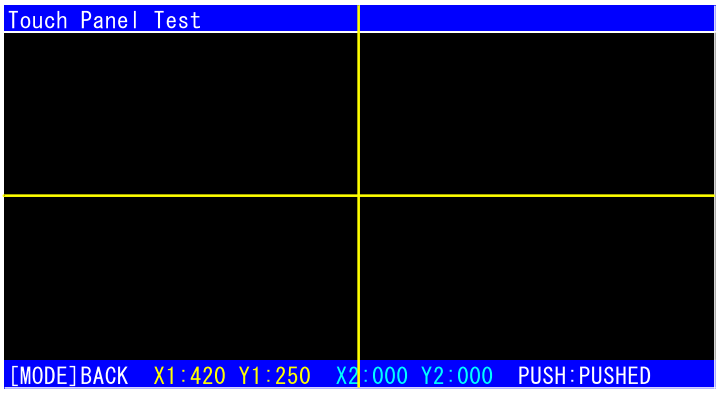

In case of one-point touching

The touched point is displayed as a cross-point of yellow lines.
The coordinate is displayed as X1/Y1 at the bottom line on the screen.
X2/Y2 is fixed to 0 and the pushing status is displayed as PUSHED.

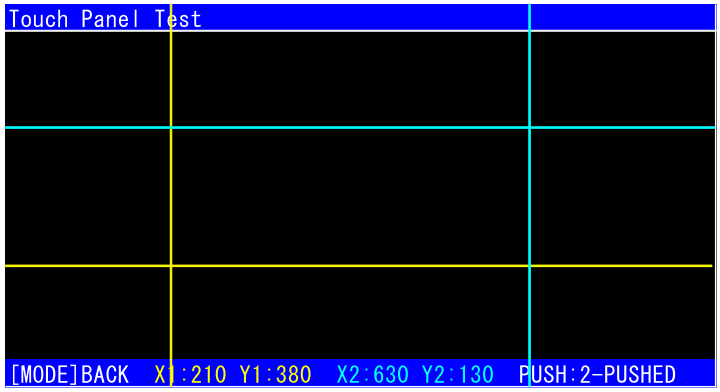

In case of two-point touching

The first touched point is displayed as a cross-point of yellow lines.
The coordinate is displayed as X1/Y1 at the bottom line on the screen.
The second touched point is displayed as a cross-point of pale blue lines.
The coordinate is displayed as X2/Y2 at the bottom line on the screen.
The pushing status is displayed as 2-PUSHED.

Return to Top Menu

10. Key Test

● Outline

This test is for checking the Key Operation.

● Allocation of Key Operation

MODE : Return to Main Menu

● Description

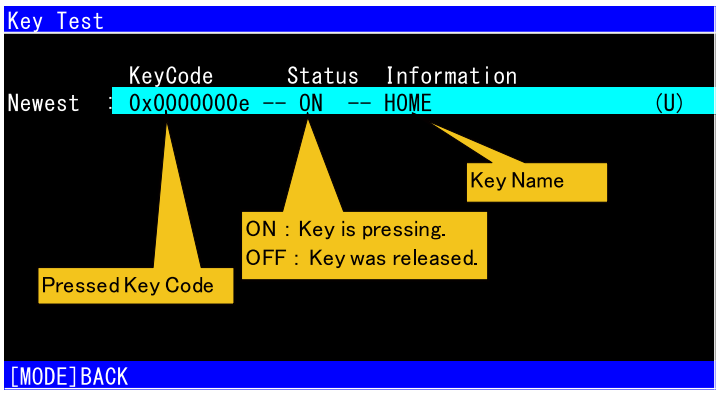

KeyCode : The pressed key code is displayed.
Status : While a key is pressed, "ON" is displayed.
If a key is released, "OFF" is displayed.
Information : The name of the pressed key is displayed.

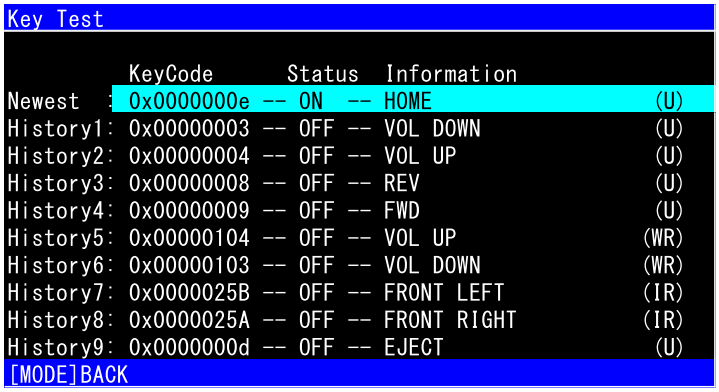

Display of operation history

If the key is operated continuously, up to 9 records are displayed.

Newest : Final key operation
History9 : Key operation before 9 operations

Return to Top Menu

11. Wired Remote Control Test

● Outline

This test is for checking the Steering Remote Control Key Operation.
When a key on the steering remote control is pressed, the key code is displayed on the screen.

● Preparation

Connect the steering remote to the unit with using steering wheel control adapter.

● Allocation of Key Operation

VOLUME+	: Selection cursor up
VOLUME-	: Selection cursor down
HOME	: Enter
MODE	: Return to previous screen

● Description

```
Wired Remote Control Test

 1. Remote Control Key Test
 2. Manufacturer Code Test

[VOL+/-]SELECT [HOME]ENTER [MODE]BACK
```

1. Remote Control Key Test	Inspection of remote control key input
2. Manufacturer Code Test	Not supported on this model

Select "1. Remote Control Key Test" by [VOL+/-] button.
Then press [HOME] to enter "Remote Control Key Test".

```
Remote Control Key Test

Key Code : 0x00000103

[MODE]BACK
```

When a key on the steering remote control is pressed,
the key code corresponding to the key is displayed.

● List of key codes of steering remote control

Key Name	Key Code
No operation (not pressed)	----------
ATT	0x00000122
VolUp, VOL+	0x00000126
VolDown, VOL-	0x00000127
Cross Key Up (Track Up), SEEK+	0x0000012c
Cross Key Down (Track Down), SEEK-	0x0000012d
Cross Key Left, LEFT	0x00000125
Cross Key Right, RIGHT	0x00000124
mode, MODE, Source	0x00000121
PHONE	0x00000129
BAND	0x00000128
On Hook, TEL OFF	0x0000012b
Off Hook, TEL ON	0x0000012a
DISP	0x00000123

Return to Top Menu

12. Learning Wired Remote Control Test

● Outline

This test is for checking the Steering Remote Key Operation of Learning Wired Remote Control.
*Learning Wired Remote Control : Function key of the unit can be set to steering remote key.
When a key on the steering remote is pressed, the voltage value is displayed on the screen.

Applicable models
AVH-X8850BT/XNRC, AVH-X8850BT/XNRD, AVH-X8850BT/XNRI, AVH-X8890BT/XNID

● Preparation

Connect the steering remote control to the unit without using steering wheel control adapter.

● Allocation of Key Operation

HOME : Change "Car Type"
MODE : Return to Main Menu

● Description

```
Learning Wired Remote Control Test

                Car Type   : [ Japanese ]
                WREMCONT1  : Hi
                WREMCONT2  : Lo

                WIRED1     : 3.000[V]
                WIRED2     : 1.000[V]

[HOME]CHANGE [MODE]BACK
```

The voltage value of System uCom 165 pin (WIRED1), 164 pin (WIRED2) are displayed.

When [HOME] is pressed, "Car Type" is toggled between "Japanese" and "Korean".
The setting value of WREMCONT1/WREMCONT2 are changed depending on "Car Type".

```
                Car Type   : [  Korean  ]
                WREMCONT1  : Lo
                WREMCONT2  : Hi
```

Return to Top Menu

15. RGB Illumination Test

● Outline

This test is for checking the Key Illumination (RGB LEDs) Operation.

● Allocation of Key Operation

VOLUME+	: Selection cursor up and switches the key illumination color
VOLUME-	: Selection cursor down and switches the key illumination color
MODE	: Return to Main Menu

● Description

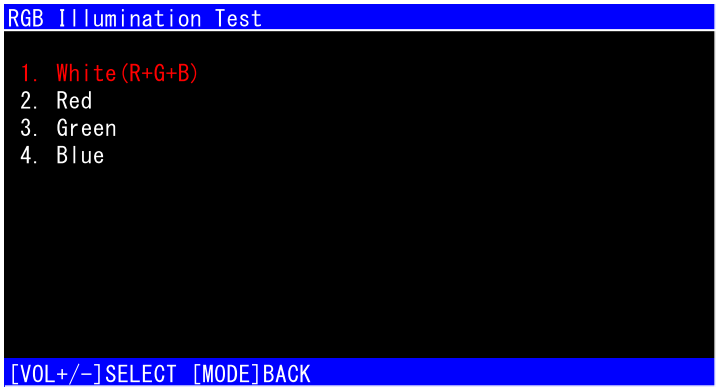

When selecting "White(R+G+B)", all color of LEDs (Red, Green, Blue) light.
When selecting "Red", "Green", "Blue", each color of LED lights.

Return to Top Menu

17. Graphics Test

● Outline

This test is for checking the Display Function by displaying various images.

● Allocation of Key Operation (Graphics Test Menu)

VOLUME+	: Selection cursor up
VOLUME-	: Selection cursor down
HOME	: Enter the selected item
MODE	: Return to Main Menu

● Description

Graphics Test Menu

```
Graphics Test

 1. Ramp Image
 2. Flicker Adjustment Image
 3. Plain Image
 4. Color Bar Image
 5. Cycle Line Image
 6. 10 Steps Image
 7. Natural Image

[VOL+/-]SELECT [HOME]ENTER [MODE]BACK
```

1. Ramp Image	: It is an item for displaying 32-gradation grayscale bar.
2. Flicker Adjustment Image	: It is an item for checking the flicker level of the screen.
3. Plain Image	: It is an item for displaying the monotone screens.
4. Color Bar Image	: It is an item for displaying the color bar.
5. Cycle Line Image	: It is an item for checking the resolution function of the screen.
6. 10 Steps Image	: It is an item for displaying 11-gradation grayscale bar.
7. Natural Image	: It is an item for checking the color tone, especially skin color.

● Screen of Each Item

1. Ramp Image

● Allocation of Key Operation

MODE	: Return to Graphics Test Menu

Ramp Image Screen

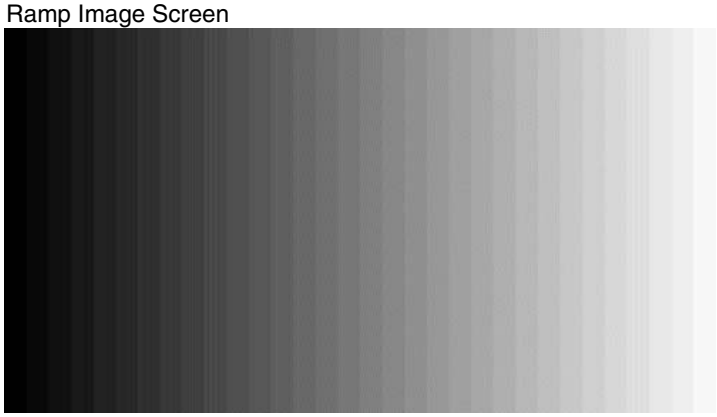

2. Flicker Adjustment Image

● Allocation of Key Operation

FORWARD	: Screen change
REVERSE	: Screen change
MODE	: Return to Graphics Test Menu

Flicker: Checkerboard Screen

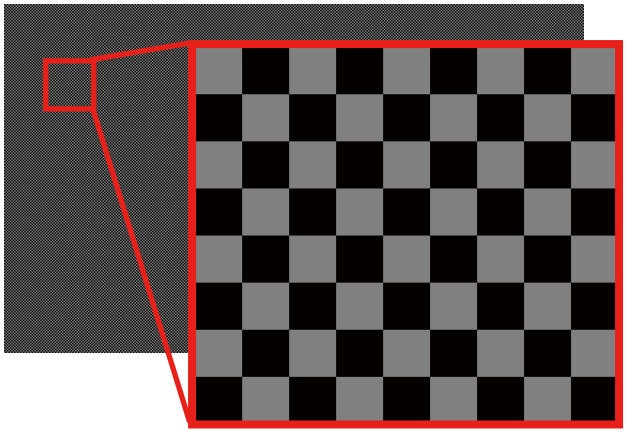

Flicker: Mesh Screen

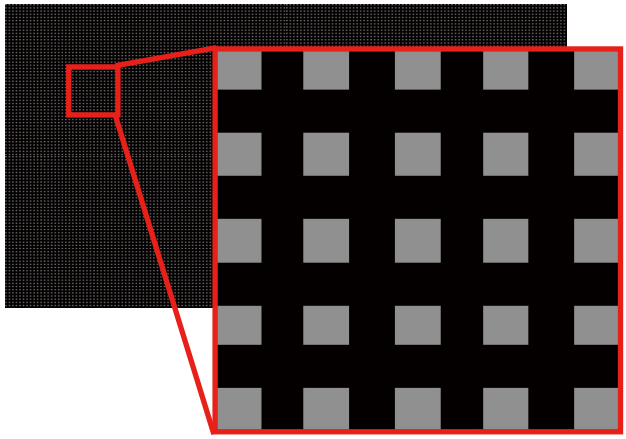

Flicker: Horizontal Stripe Screen

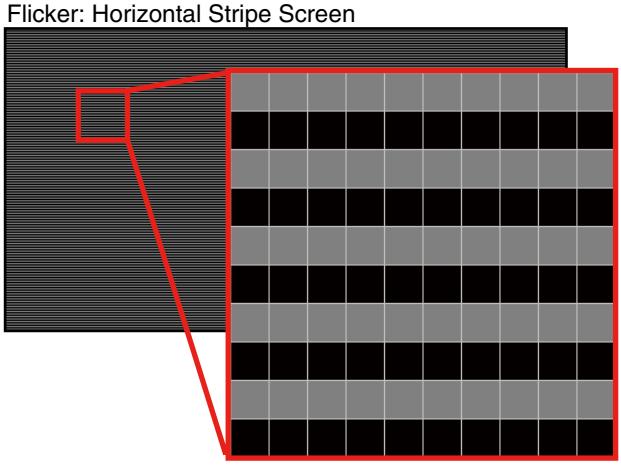

Flicker: Vertical Stripe Screen

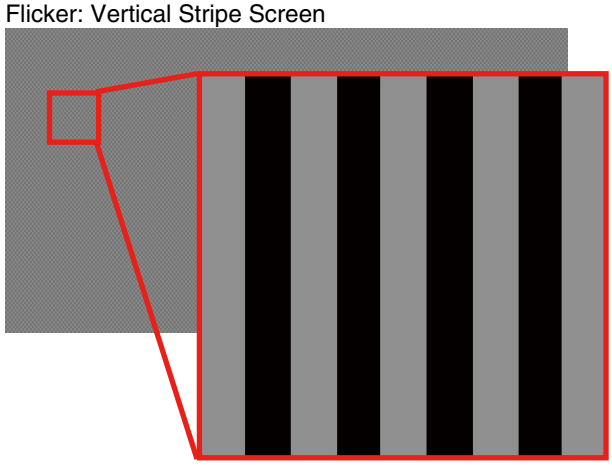

3. Plain Image

● Allocation of Key Operation

FORWARD	: Screen change
REVERSE	: Screen change
MODE	: Return to Graphics Test Menu

Plain Image: Blue Screen

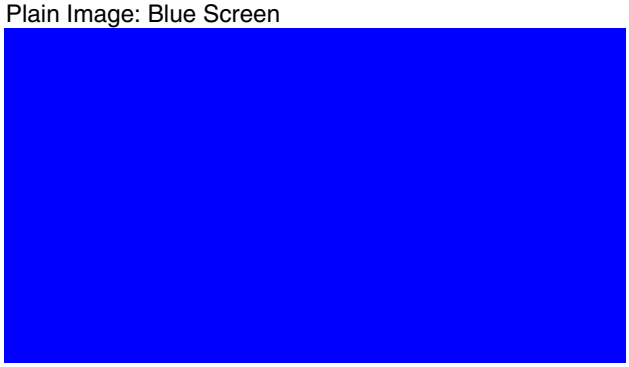

Plain Image: Red Screen

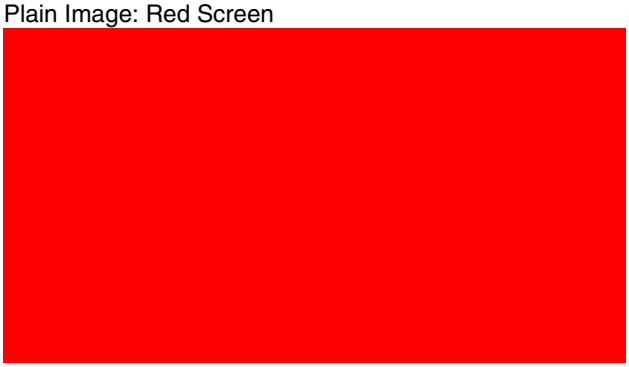

Plain Image: Pink Screen

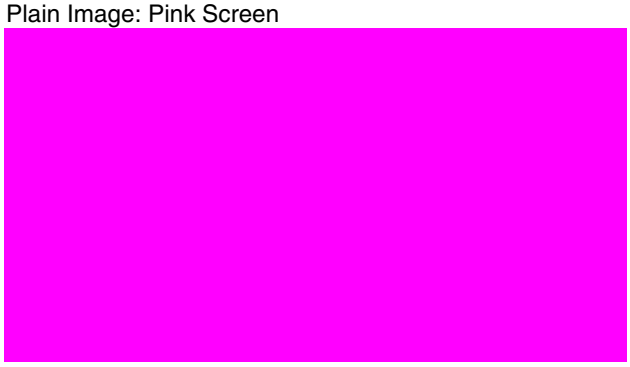

Plain Image: Green Screen

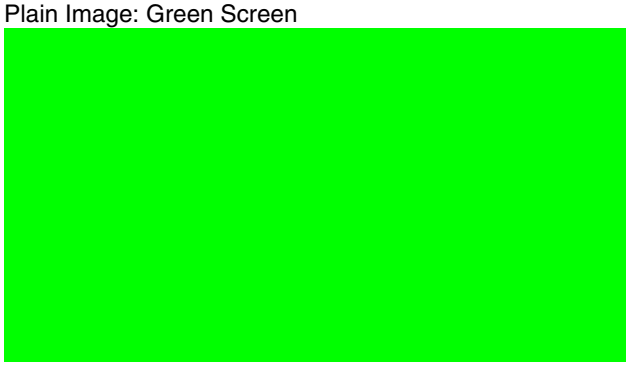

Plain Image: Cyan Screen

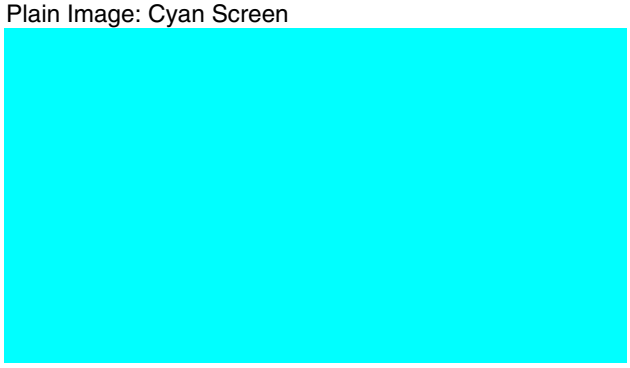

Plain Image: Yellow Screen

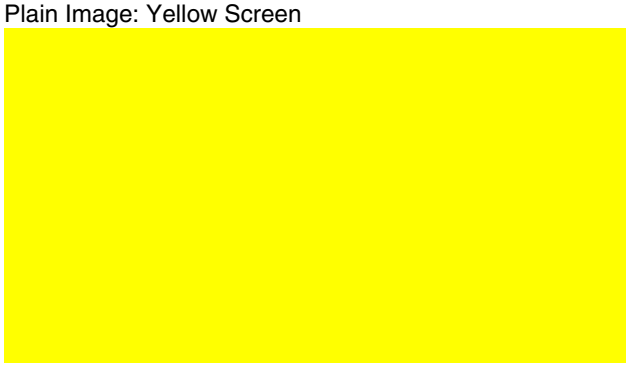

Plain Image: White Screen

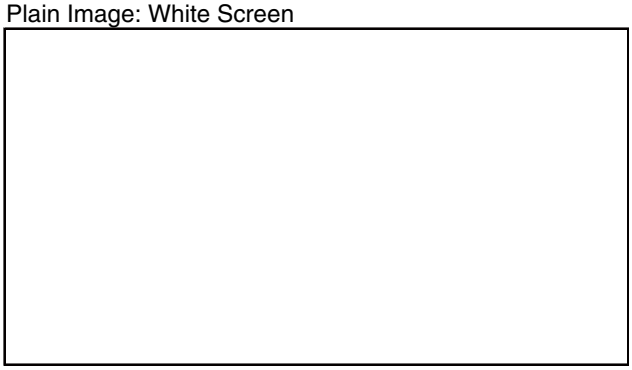

Plain Image: Black Screen

4. Color Bar Image

● Allocation of Key Operation
MODE : Return to Graphics Test Menu

Color Bar Image Screen

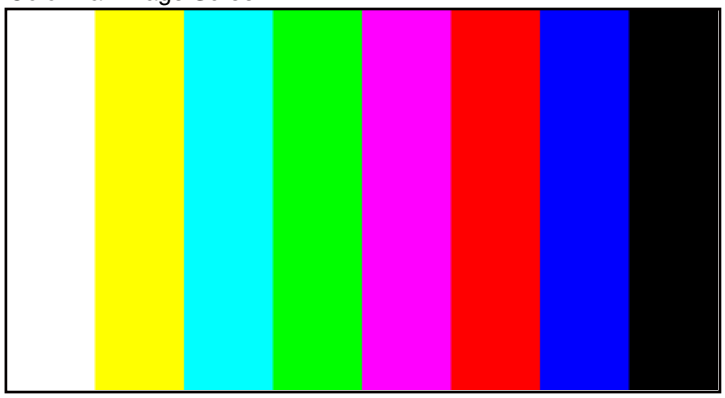

5. Cycle Line Image

● Allocation of Key Operation
MODE : Return to Graphics Test Menu

Cycle Line Image Screen

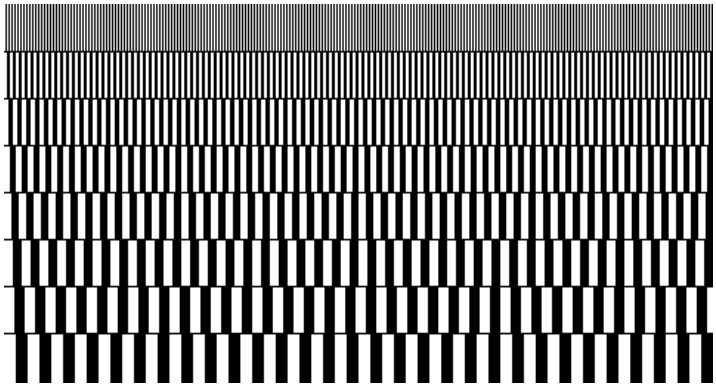

6. 10 Steps Image

● Allocation of Key Operation
MODE : Return to Graphics Test Menu

10 Steps Image Screen

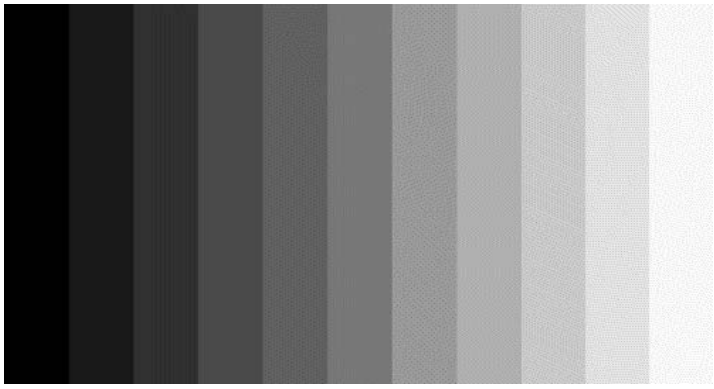

7. Natural Image

● Allocation of Key Operation
MODE : Return to Graphics Test Menu

Natural Image Screen

Return to Top Menu

21. External Connection Test

● Outline

This test is for confirming the status of leads.

● Allocation of Key Operation

MODE : Return to Main Menu

● Description

Following information is displayed.

Item	Description
Illumination	Illumination terminal state
uCom Parking Brake	Parking brake terminal state acquired from System uCom
SOC Parking Brake	Parking brake terminal state acquired from SOC
uCom Reverse	Reverse terminal state acquired from System uCom
SOC Reverse	Reverse terminal state acquired from SOC
TELMUTE	TELMUTE terminal state
PTEST	TEST terminal state

If NG is not generated in all items, the background of the screen changes to blue.

```
External Connection Test

Illumination              OFF
uCom Parking Brake         ON
SOC Parking Brake          ON
uCom Reverse              OFF
SOC Reverse               OFF
TELMUTE                   LOW
PTEST                     LOW



[MODE]BACK
```

```
External Connection Test

Illumination              OFF
uCom Parking Brake         ON
SOC Parking Brake          ON
uCom Reverse              OFF
SOC Reverse               OFF
TELMUTE                   LOW
PTEST                     LOW



[MODE]BACK
```

Return to Top Menu

22. Temperature Sensor Test

● Outline

This test is for confirming the temperature information for SOC Unit and Monitor Unit.

● Allocation of Key Operation

MODE : Return to Main Menu

● Description

```
Temperature Sensor Test

 SOC TEMP            20 [C]
 MONITOR TEMP        25 [C]
 GPS/Sensor TEMP     -- [C]

[MODE]BACK
```

Item	Unit
SOC Unit Temperature	°C
LCD Monitor Temperature	°C
Sensor Unit Temperature (N/A for this model)	°C

When acquisition of temperature information is failed, the following screen is displayed. (Communication Error)

```
Temperature Sensor Test

 SOC TEMP            20 [C]
 MONITOR TEMP        NG (COMM ERROR)
 GPS/Sensor TEMP     --

[MODE]BACK
```

Return to Top Menu

23. Fan Control Test

● Outline

This test is for checking FAN rotation.

● Allocation of Key Operation

FORWARD	: Change of rotation speed
REVERSE	: Change of rotation speed
MODE	: Return to Main Menu

● Description

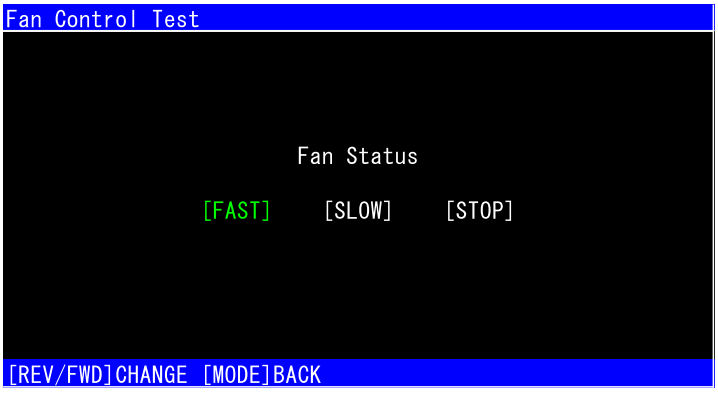

The current status of FAN is displayed with green characters.
Press [FORWARD] or [REVERSE] to switch between "FAST", "SLOW" and "STOP".
When returning to Main Menu, FAN control operation returns to the automatic control.

Regarding the automatic control, refer to "5.6 FAN ROTATION CONTROL".

Return to Top Menu

24. SD Test

● Outline

This test is for checking that SD Card Slot and SD Card can be used normally by Write/Read check.

● Preparation

Insert SD Card with 1KB or more free space into the SD Card Slot to be inspected.

● Allocation of Key Operation

VOLUME+	: Selection cursor up
VOLUME-	: Selection cursor down
HOME	: Enter the selected item
MODE	: Return to Main Menu

● Description

1.Media SD Test
Write/Read Test of SD Card in the SD Card Slot for user.
When [HOME] is pressed, the inspection starts.

2.Storage SD Test
Write/Read Test of Built-in SD Card storing the product program.
When [HOME] is pressed, the inspection starts.

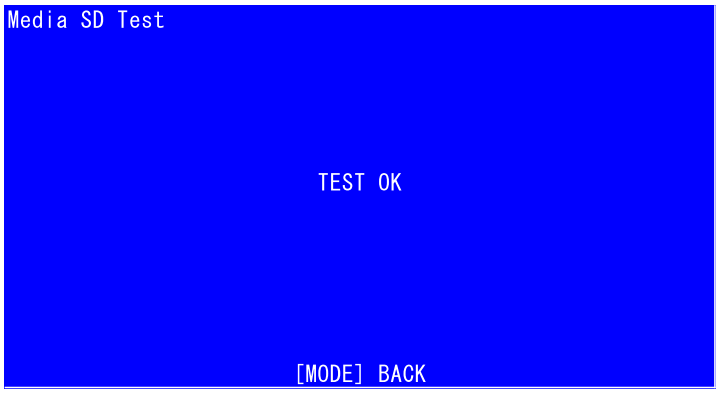

When the inspection is completed with no error, this screen is displayed.

Return to Top Menu

26. Bluetooth Line Test

● Outline

This test is for checking the Hands-Free audio line of Bluetooth Module.
Audio signal from MIC input is output to Speaker out by using loopback function of BT Module.
The hands-free audio line (Fig. 1) can be checked without using BT device by this test.

Fig.1 Hands-Free Audio Line

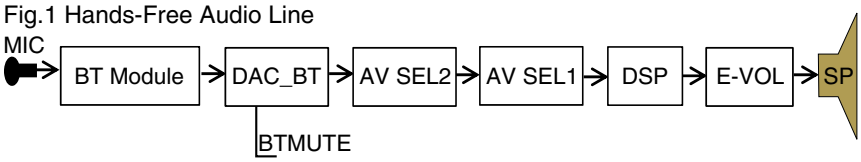

● Preparation

Connect the Hands-free Microphone to "MIC INPUT".

● Allocation of Key Operation

HOME : MUTE ON/OFF
MODE : Return to Main Menu

● Description

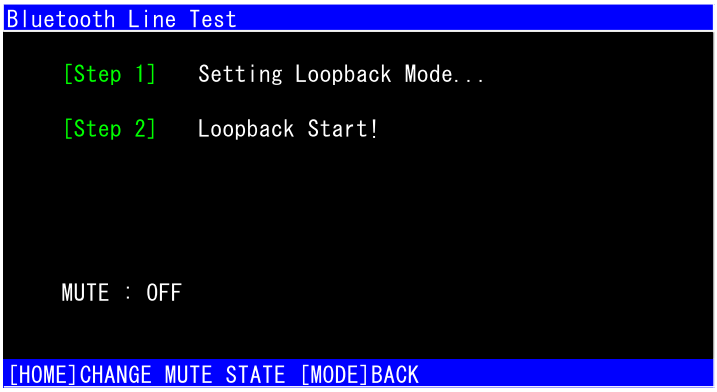

[Step 1] When entering this test, the initial setting starts automatically.
If the initial setting is failed, following error message is displayed.

Error Message	Details
Command Error : SetBluetoothState()	Startup of BT Module is failed.
Command Error : SCO Loopback	Start of SCO Loopback Mode is failed.

[Step 2] When the initial setting is completed, [Step 2] is displayed.
In this condition, Audio signal from MIC input is output to Speaker out.

Return to Top Menu

27. HD Radio Data Test (UC Model Only)

● Outline

This test is for checking the communication line used for Album Art data transmission between SOC and HD Radio Tuner.

● Allocation of Key Operation

MODE : Return to Main Menu

● Description

```
HD Radio Data Test

  Step 1. Enter HD test mode                    OK
  Step 2. Source ON                             OK
  Step 3. Request dummy data
  Step 4. Data receive check
```

When entering this test, the inspection starts automatically.
The result of each inspection step is displayed.

Enter HD test mode	HD Radio data test mode is entered.
Source ON	HD-Radio source is turned ON.
Request dummy data	Test data transmission is requested.
Data receive check	Reception of correct test data is confirmed.

```
HD Radio Data Test

  Step 1. Enter HD test mode                    OK
  Step 2. Source ON                             OK
  Step 3. Request dummy data                    OK
  Step 4. Data receive check                    OK

                        [MODE]BACK
```

When the inspection is completed with no error, this screen is displayed.

Return to Top Menu

31. Audio Test for Production

● Outline

This test is for checking audio signal line.
Audio signal is output from SOC to each audio line.(Fig.1)

Fig.1 Audio Signal Line

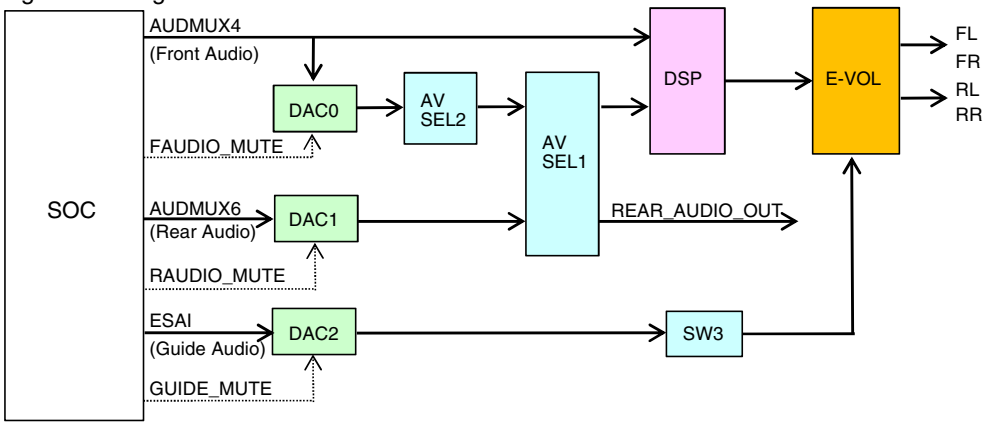

● Allocation of Key Operation (Audio Test for Production Menu)

VOLUME+	: Selection cursor up
VOLUME-	: Selection cursor down
REVERSE	: Change of setting
FORWARD	: Change of setting
HOME	: Enter the selected item
HOME&MODE	: PLAY / STOP
MODE	: Return to previous screen

● Description

Audio Test for Production Menu

```
Audio Test for Production

  1. Front Audio Line Test
  2. Rear Audio Line Test
  3. Guide Audio Line Test

[VOL+/-]SELECT [HOME]ENTER [MODE]BACK
```

1. Front Audio Line Test : Sine wave is output for the Front audio line.
2. Rear Audio Line Test : Sine wave is output for the Rear audio line.
3. Guide Audio Line Test : Sine wave is output for the Guide audio line.

● Details of Each Test

1. Front Audio Line Test

```
Front Audio Line Test

  Frequency   [  1000 ]
  Volume      [    12 ]
  Mute        [   OFF ]
  Route       [   DAC ]

                          STOP



[VOL+/-]SELECT [REV/FWD]CHANGE [HOME&MODE]PLAY/STOP
[MODE]BACK
```

Setting Item	Setting Range
Frequency[Hz] (*)	50/100/200/250/500/1000/2000/4000/5000/8000/10000/12500/16000/18000/20000
Volume	0 - 40
Mute	OFF/ON
Route (*)	DAC/DSP

(*) Setting can be changed during STOP only.

2. Rear Audio Line Test

```
Rear Audio Line Test

  Frequency   [  1000 ]
  Mute        [   OFF ]



                          STOP



[VOL+/-]SELECT [REV/FWD]CHANGE [HOME&MODE]PLAY/STOP
[MODE]BACK
```

Setting Item	Setting Range
Frequency[Hz] (*)	50/100/200/250/500/1000/2000/4000/5000/8000/10000/12500/16000/18000/20000
Mute	OFF/ON

(*) Setting can be changed during STOP only.

3. Guide Audio Line Test

```
Guide Audio Line Test

  Frequency   [  1000 ]
  Volume      [    12 ]
  Mute        [   OFF ]



                          STOP



[VOL+/-]SELECT [REV/FWD]CHANGE [HOME&MODE]PLAY/STOP
[MODE]BACK
```

Setting Item	Setting Range
Frequency[Hz] (*)	50/100/200/250/500/1000/2000/4000/5000/8000/10000/12500/16000/18000/20000
Volume	0 - 31
Mute	OFF/ON

(*) Setting can be changed during STOP only.

Return to Top Menu

6.2 DVD TEST MODE

1. Outline

The service test mode is used to check functions in fault diagnosis by a serviceman in case of any defect found in the DVD mecha. No general user goes into this mode.
The mode is implemented mainly to check the FE part. It is originally the test mode at the FE part implemented in the PC communication, which is modified to allow implementation in the HOST communication.
The command for the test mode received in the HOST communication is interpreted by the application part, converted to the PC communication command and transferred to the OS.
The OS transfers this command to the PC task as if it received the command in the PC communication.
The execution result is noticed to the application part by an e-mail instead of the PC communication.
The application part then transmits the result in the HOST communication to display OSD.

2. Conditions for operation

(1) This service test mode is enabled only when the test mode is activated. At this time, no normal operation is executed.

3. How to enter the test mode

1. Download GGS1153 from the Service Site.
2. Decompress the file.
3. Copy the decompressed file to the USB memory root.
4. Connect the USB memory to USB port 1 or USB port 2 of the unit.
5. The unit will be reset automatically.
6. Load CD, and change to disc source.

For example

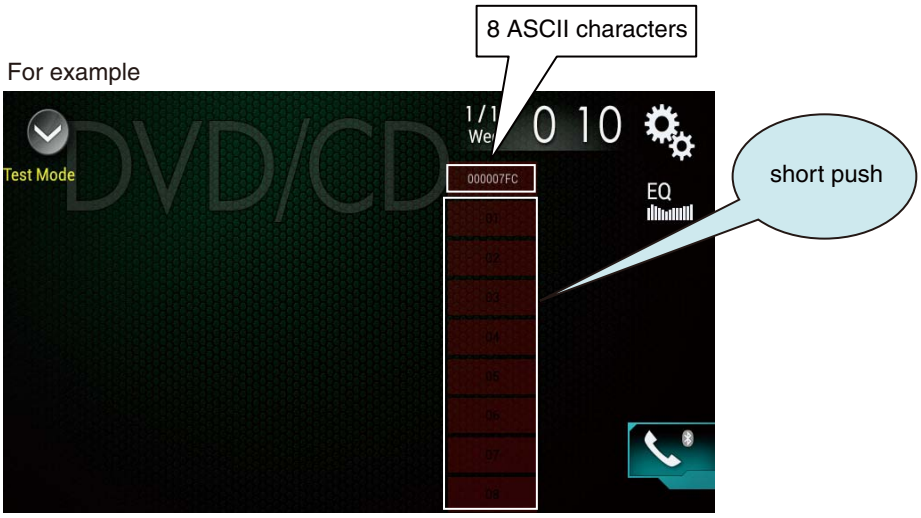

Execute the test mode using each key.

01 : [redacted]	TEST KEY (1)
02 : [redacted]	TEST KEY (2)
03 : [redacted]	TEST KEY (3)
04 : [redacted]	TEST KEY (4)
05 : [redacted]	TEST KEY (5)
06 : [redacted]	TEST KEY (6)
07 : [redacted]	TEST KEY (7)
08 : [redacted]	TEST KEY (8)

Image of the test mode.

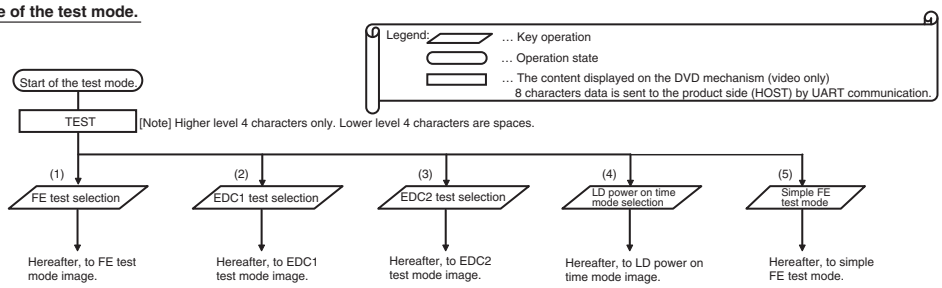

[Note] In order to move on to another test after selecting a test (FE/EDC1/EDC2), it is necessary to restart the DVD mechanism in the test mode.

Image of the front end test mode.

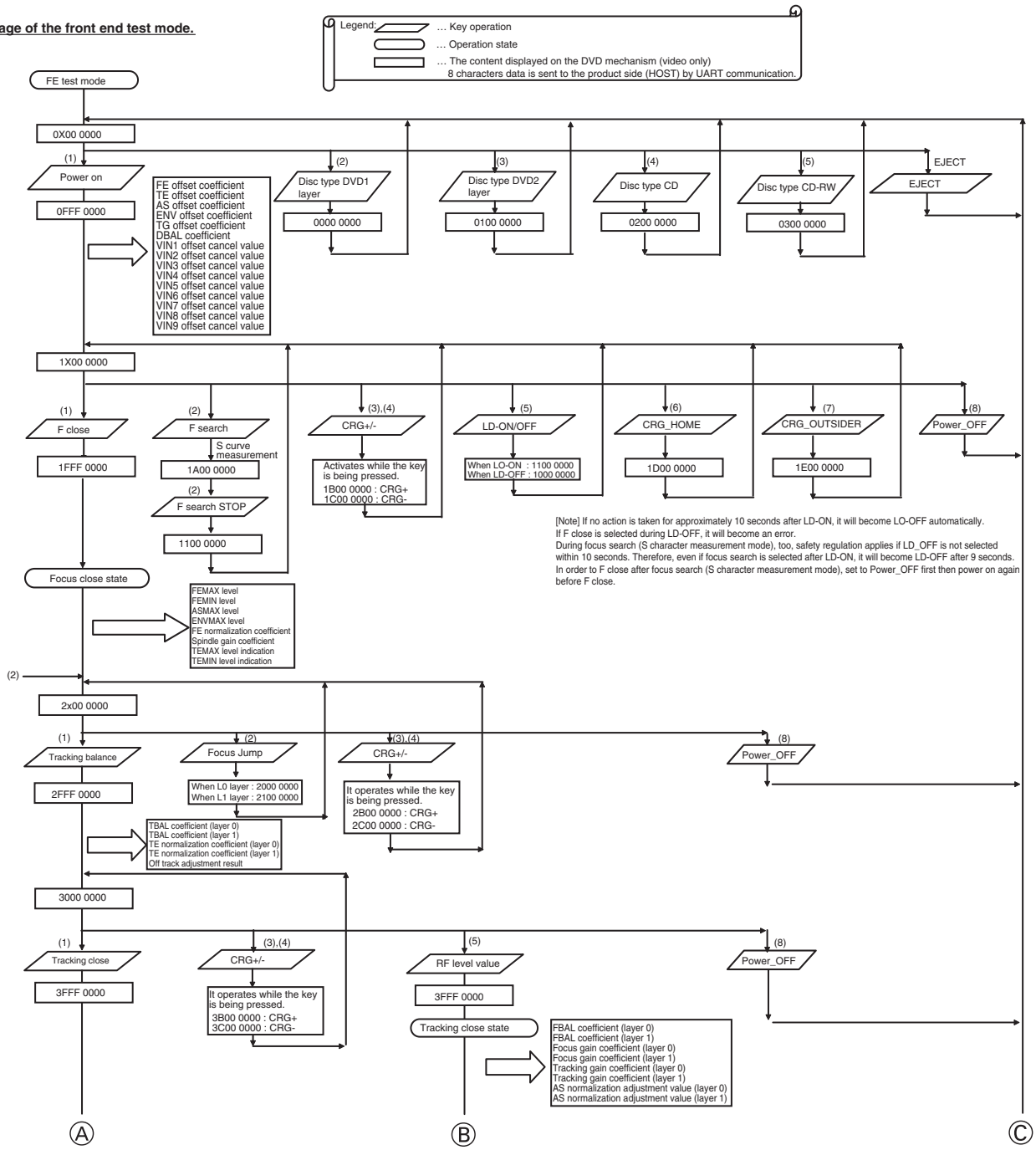

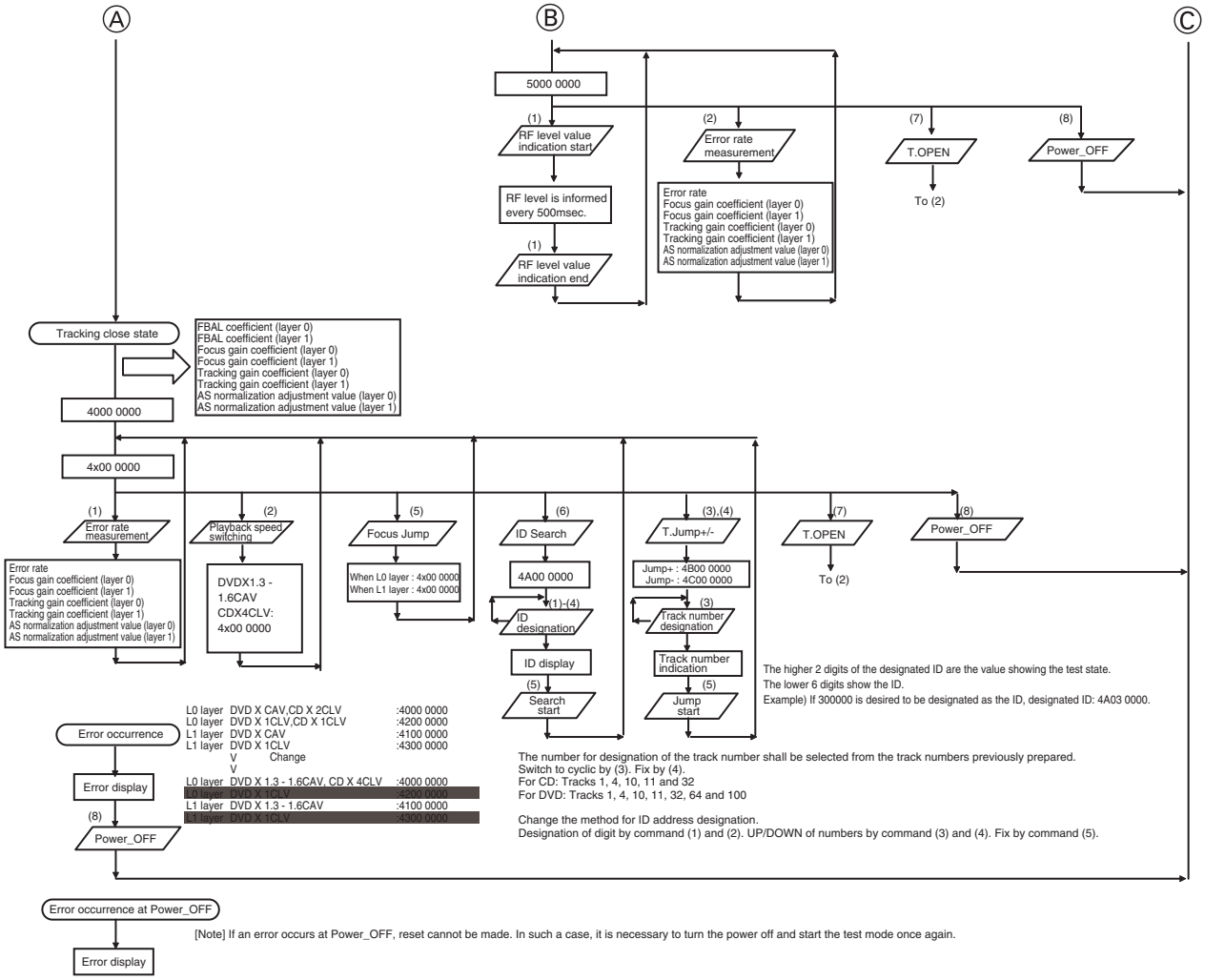
A
B
C
5000 0000
(1)
RF level value indication start
RF level is informed every 500msec.
(1)
RF level value indication end
(2)
Error rate measurement
Error rate
Focus gain coefficient (layer 0)
Focus gain coefficient (layer 1)
Tracking gain coefficient (layer 0)
Tracking gain coefficient (layer 1)
AS normalization adjustment value (layer 0)
AS normalization adjustment value (layer 1)
(7)
T.OPEN
To (2)
(8)
Power_OFF
Tracking close state
FBAL coefficient (layer 0)
FBAL coefficient (layer 1)
Focus gain coefficient (layer 0)
Focus gain coefficient (layer 1)
Tracking gain coefficient (layer 0)
Tracking gain coefficient (layer 1)
AS normalization adjustment value (layer 0)
AS normalization adjustment value (layer 1)
4000 0000
4x00 0000
(1)
Error rate measurement
Error rate
Focus gain coefficient (layer 0)
Focus gain coefficient (layer 1)
Tracking gain coefficient (layer 0)
Tracking gain coefficient (layer 1)
AS normalization adjustment value (layer 0)
AS normalization adjustment value (layer 1)
(2)
Playback speed switching
DVDX1.3 - 1.6CAV
CDX4CLV:
4x00 0000
(5)
Focus Jump
When L0 layer : 4x00 0000
When L1 layer : 4x00 0000
(6)
ID Search
4A00 0000
(1)-(4)
ID designation
ID display
(5)
Search start
(3),(4)
T.Jump+/-
Jump+ : 4B00 0000
Jump- : 4C00 0000
(3)
Track number designation
Track number indication
(5)
Jump start
(7)
T.OPEN
To (2)
(8)
Power_OFF
The higher 2 digits of the designated ID are the value showing the test state.
The lower 6 digits show the ID.
Example) If 300000 is desired to be designated as the ID, designated ID: 4A03 0000.
Error occurrence
Error display
(8)
Power_OFF
L0 layer DVD X CAV,CD X 2CLV :4000 0000
L0 layer DVD X 1CLV,CD X 1CLV :4200 0000
L1 layer DVD X CAV :4100 0000
L1 layer DVD X 1CLV :4300 0000
V Change
V
L0 layer DVD X 1.3 - 1.6CAV, CD X 4CLV :4000 0000
L1 layer DVD X 1.3 - 1.6CAV :4100 0000
The number for designation of the track number shall be selected from the track numbers previously prepared.
Switch to cyclic by (3). Fix by (4).
For CD: Tracks 1, 4, 10, 11 and 32
For DVD: Tracks 1, 4, 10, 11, 32, 64 and 100
Change the method for ID address designation.
Designation of digit by command (1) and (2). UP/DOWN of numbers by command (3) and (4). Fix by command (5).
Error occurrence at Power_OFF
Error display
[Note] If an error occurs at Power_OFF, reset cannot be made. In such a case, it is necessary to turn the power off and start the test mode once again.

EDC. Image of the test mode

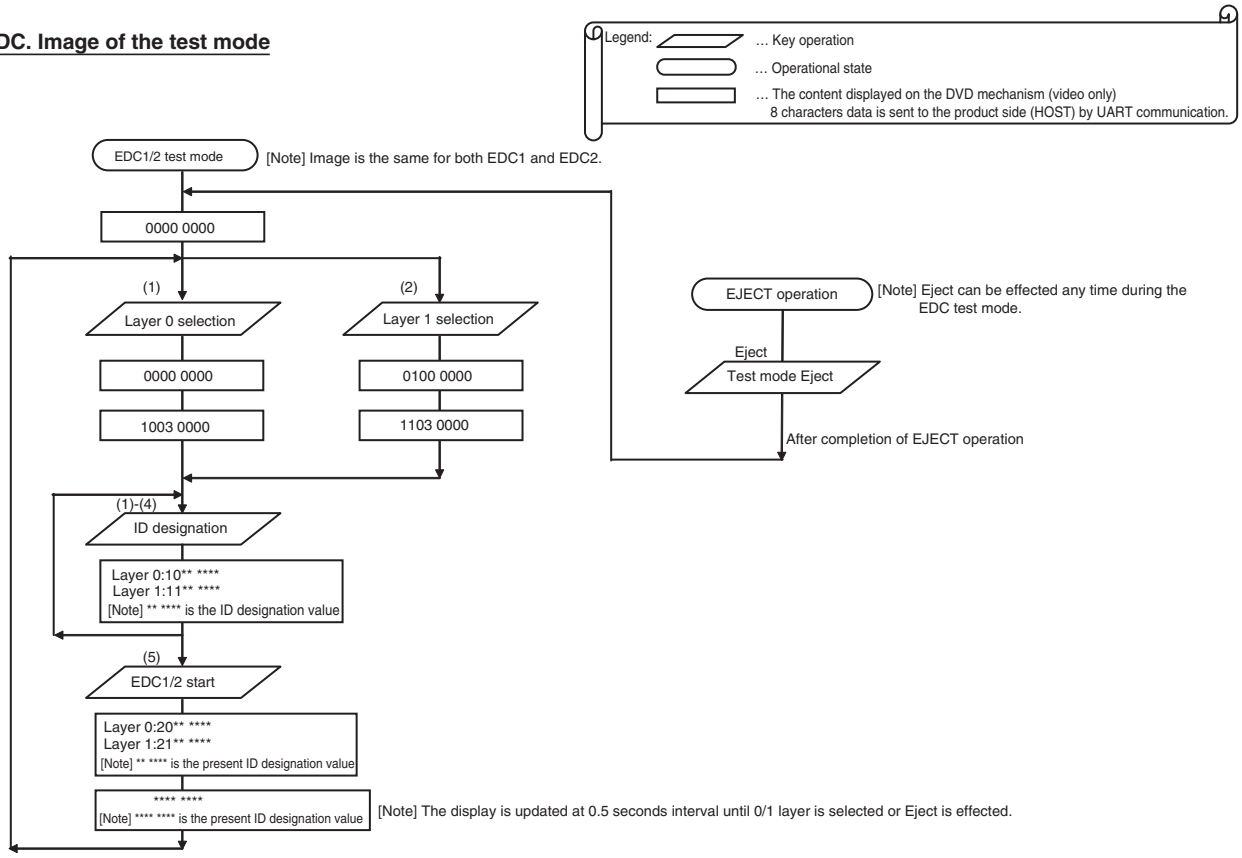

Image of the LD power on time mode.

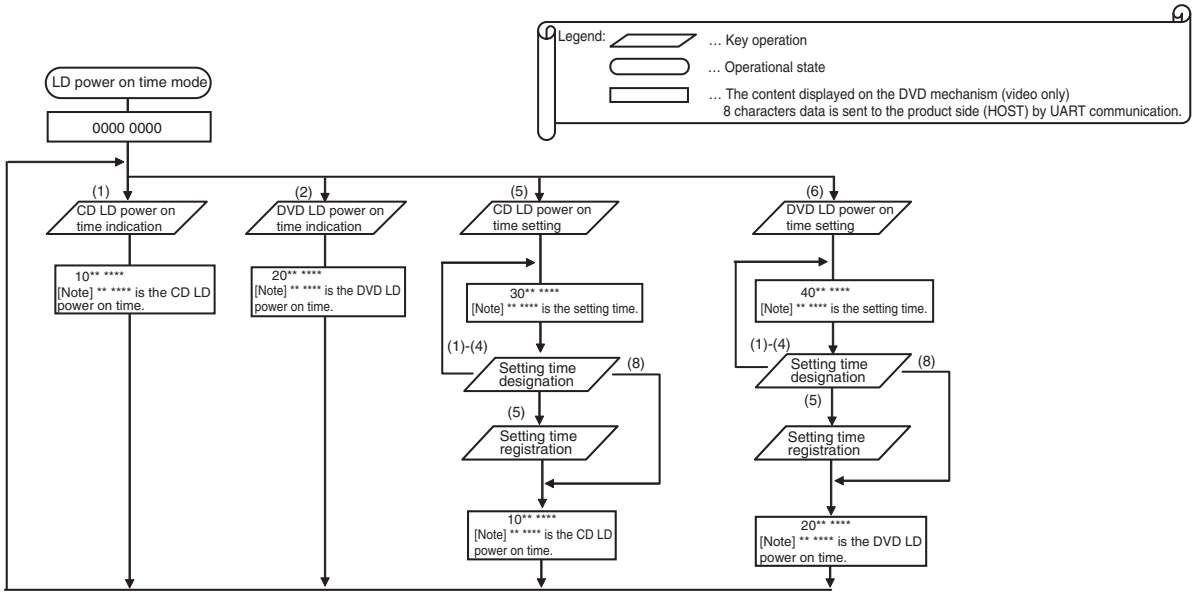

[Method of setting time designation]
Designate the digit by command (1) and (2). UP/DOWN of numbers by command (3) and (4).
Fix by command (5). Cancel by command (8).

[Note] If the power on time is 999999 hours or more, it is always reported as 999999 hours.
[Note] If the power on time is "*E** ****", the value may not be correct due to the life of the flash memory.

Simple test mode

The selection of the figure of each screen can be selected by "Key command for the test".

DVD Simple test mode screen is output from the rear video out only.
Connect the rear video out to the display and select the source for the rear display to "Mirror" or "Disc".

<Flow chart>

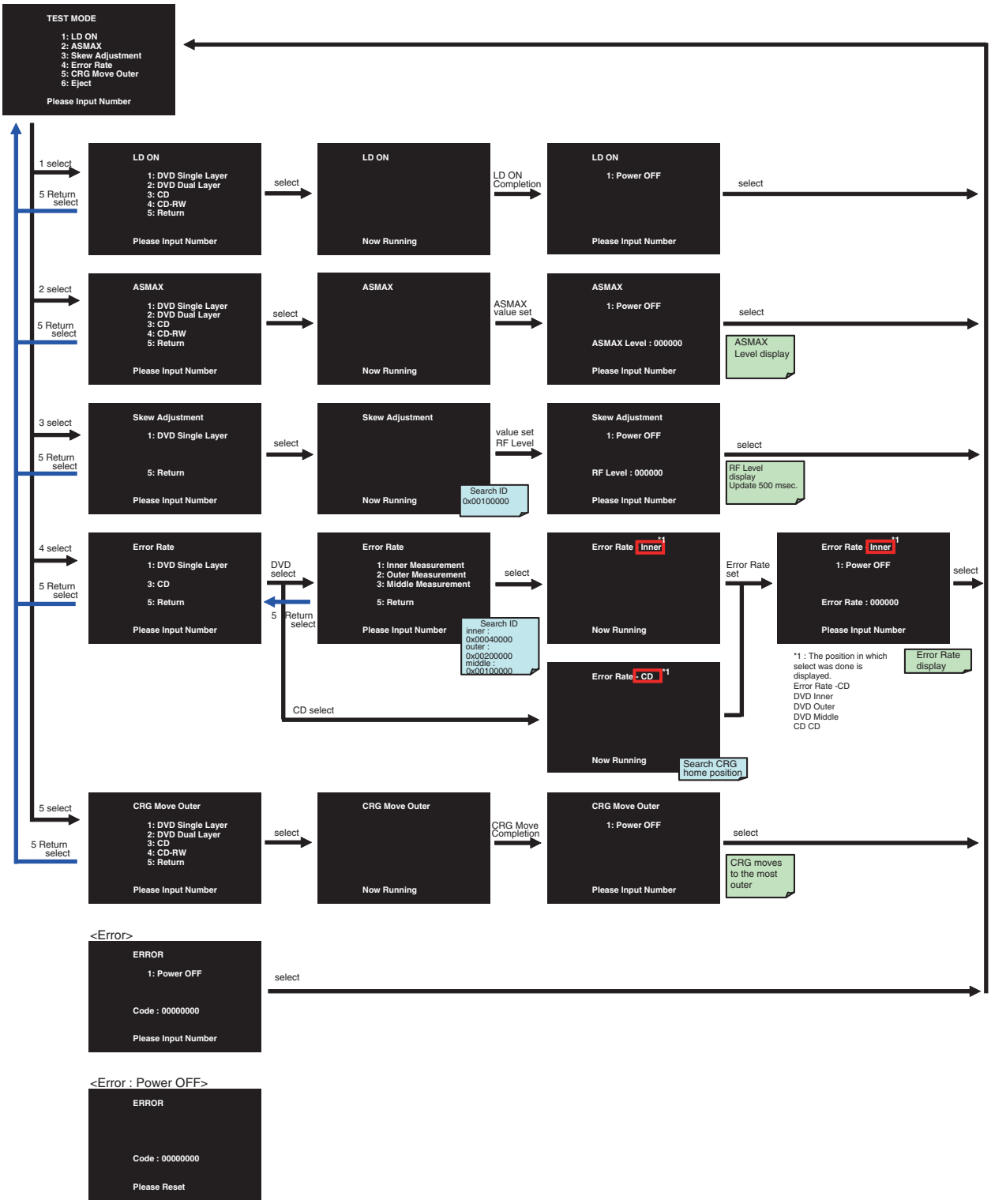

7. DISASSEMBLY

While the photograph shown is slightly different from this model in shape, the disassembly procedure is the same.

● Removing the Detach Monitor Assy and the Case Unit (Fig.1)

Method for opening the flap manually
Insert a tip of screwdriver whose diameter is approximately 2mm into the slit at the bottom surface of the product and slide the flame part to the direction indicated by an arrow.

1. Pull out the Detach Monitor Assy in the direction indicated by an arrow.
2. Disconnect the connector.
3. Slide the Lever in the direction indicated by an arrow and remove the Detach Monitor Assy by lifting it in the direction indicated by a blue arrow.
4. Remove the two screws and then remove the Case Unit.

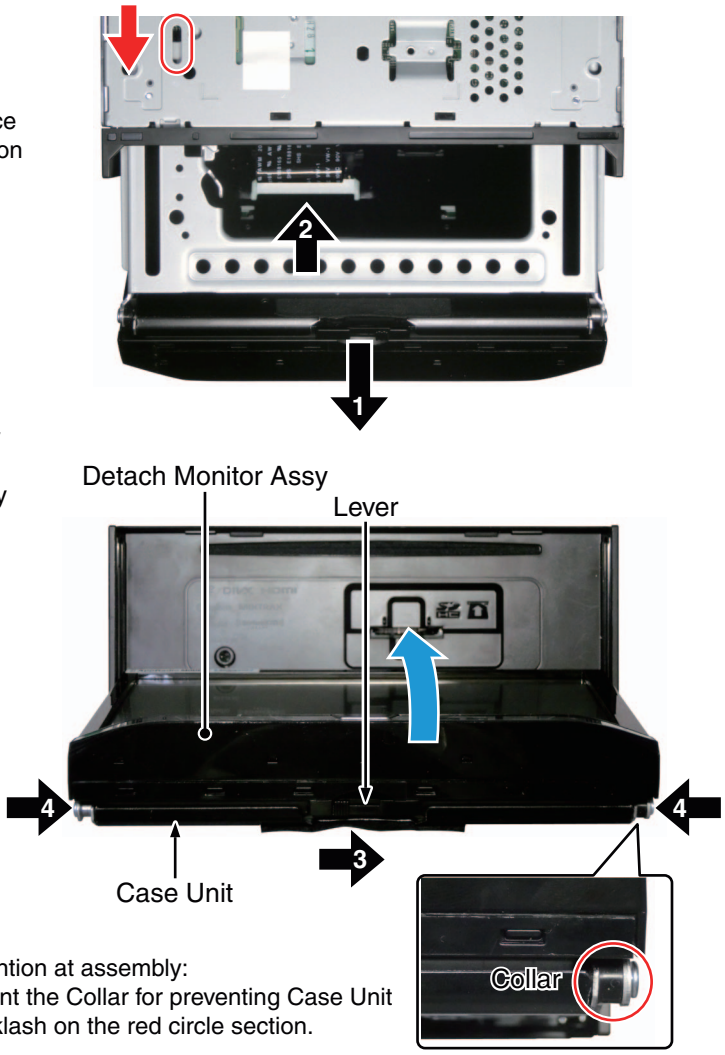

Attention at assembly:
Mount the Collar for preventing Case Unit backlash on the red circle section.

Fig.1

●Removing the Panel (Fig.2)

1 Remove the two screws.

2 Release the eight latches and then remove the Panel.

1 Attention at assembly:
Pass the FFC through two Hooks.

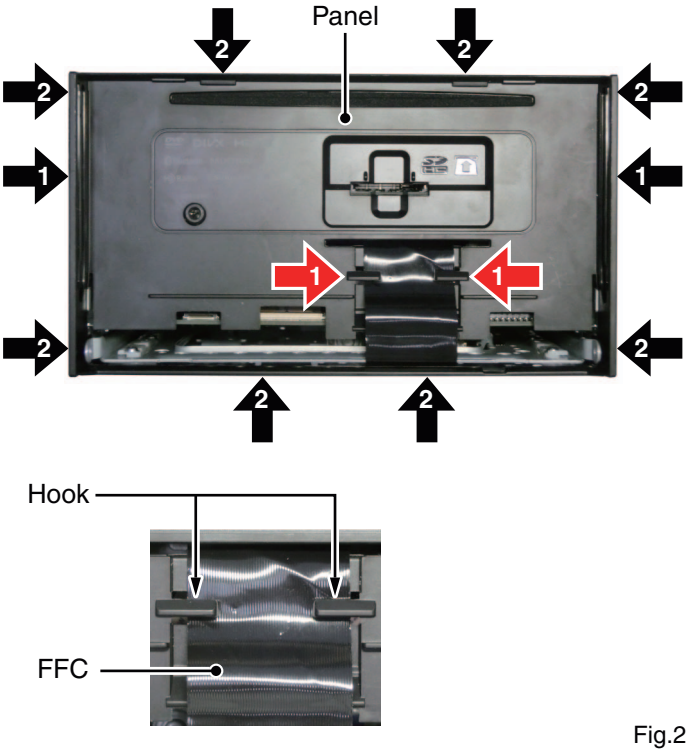

Fig.2

●Removing the DVD Mechanism Module (Fig.3)

1 Disconnect the connector.

2 Remove the four screws and then remove the DVD Mechanism Module.

● Attention of removing

▶ Don't remove this screws excluding the dismantlement of the DVD Mechanism Module.

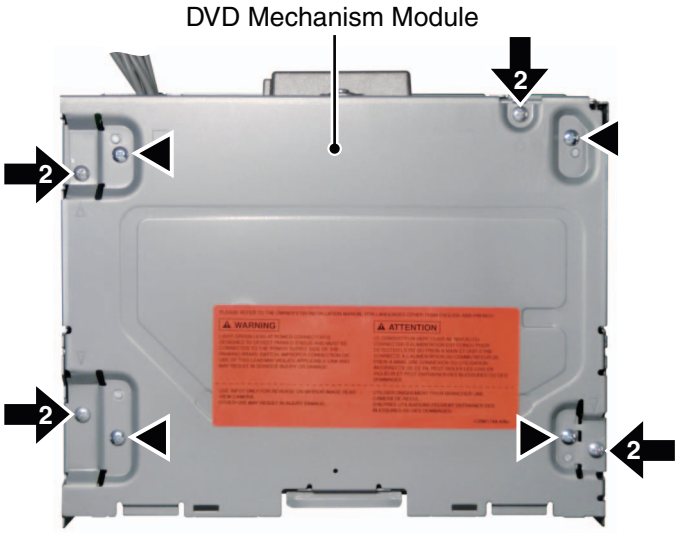

Fig.3

●Removing the IF Unit (Service) (1/2) (Fig.4)

1 Remove the two screws.

2 Remove the two screws.

3 Disconnect the connector and then remove the Heat Sink and the Holder.

4 Remove the screw.

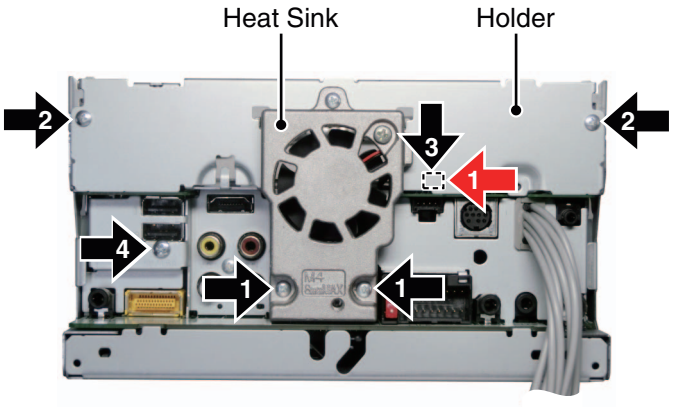

1 Attention at assembly:
Styling Fan Cable as like photo.

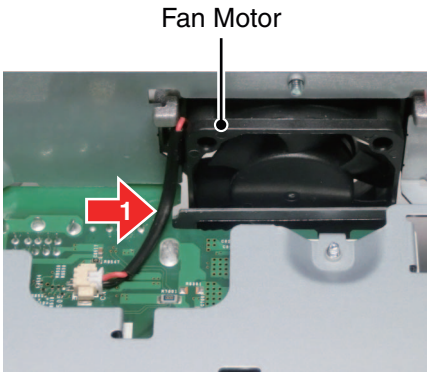

Fig.4

●Removing the IF Unit (Service) (2/2) (Fig.5)

1. Disconnect the two connectors.
2. Disconnect the two connectors.
3. Straighten the tabs at two locations indicated.
4. Loose the two screws.
   (IF Unit (Service) and AV Unit are able to be removed easily by loose the screws)
5. Remove the two screws and then remove the IF Unit (Service) and the Holder.

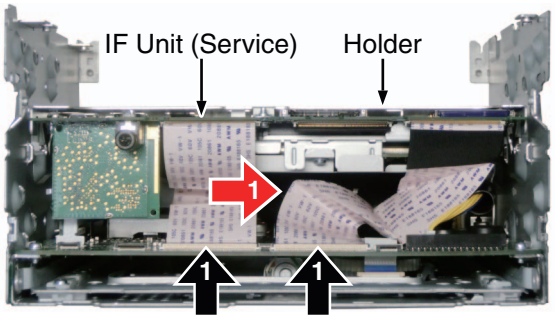

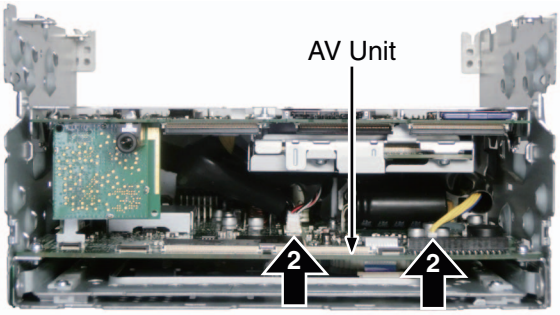

1. Attention at assembly:
   Be careful of not touching the FFC to the Holder.

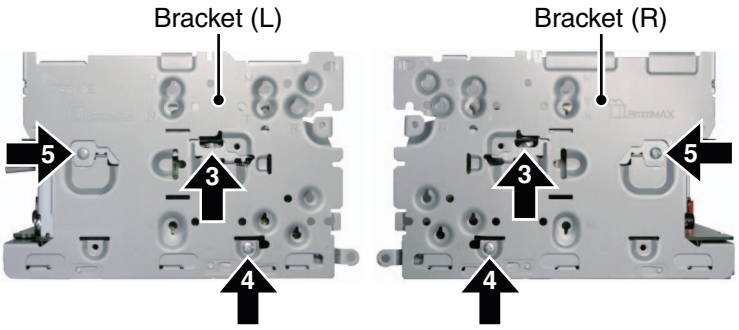

6. Remove the four screws and then remove the Shield Case and the SOC Single Core Unit. (4200NEX/XNUC)
6. Remove the four screws and then remove the SOC Single Core Unit. (X8800BT/XNEU5, X8800BT/XNUR, X8850BT/XNRC, X8850BT/XNRD, X8850BT/XNRI and X8890BT/XNID)
7. Remove the four screws and then remove the IF Unit (Service).

Precaution on attachment of Sheet

- Fit the Sheet to the silk of PCB and push the edge by a finger preventing it from peeling off to affix it surely.

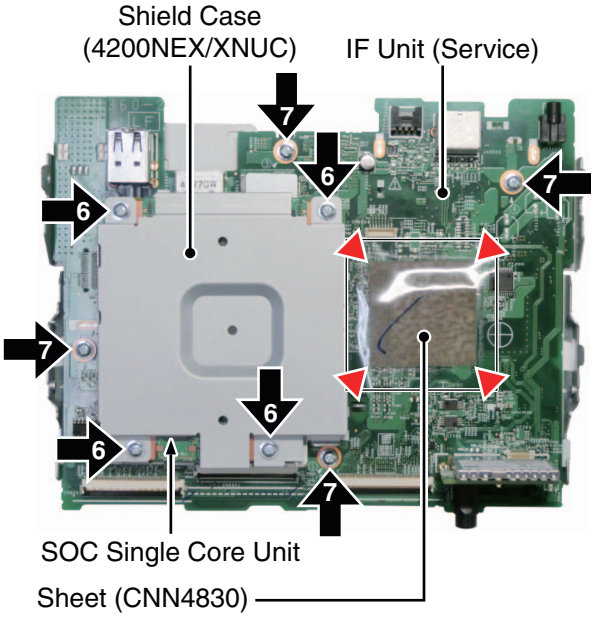

Fig.5

●Removing the Brackets (Right and Left) (Fig.6)

1. Insert the tweezer in the gap between Bracket and Chassis Unit and expand the Bracket outward.

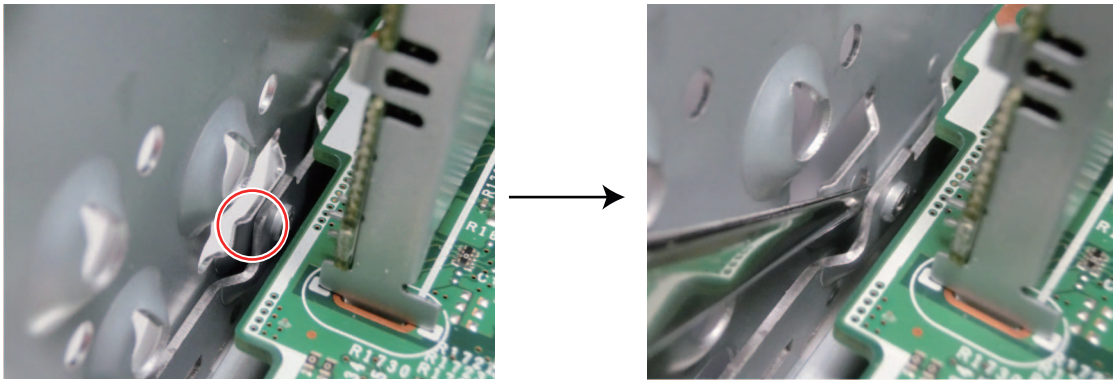

2. This dowel is removed.

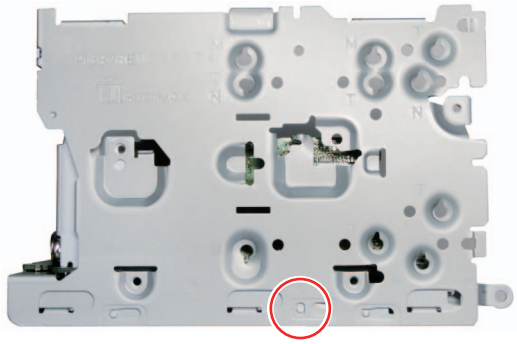

3. Slide the Bracket to the rear side of the product and then remove the Bracket.

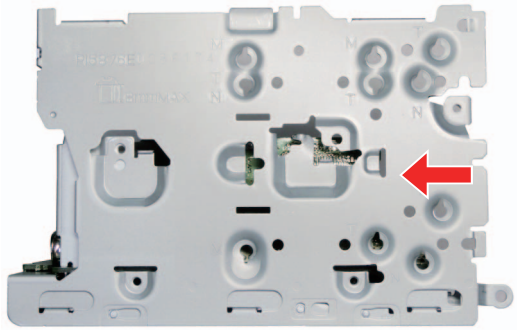

Fig.6

● Removing the AV Unit (Fig.7)

Attention at Assembly:
1. Connect the cable by crossing it as shown in the below figure.
2. The cable indicated by blue frame should not protrude from C1322 and C1323 (part indicated by red line) to front direction.
3. Lay the cable by pushing the root of cable as shown in the below figure.

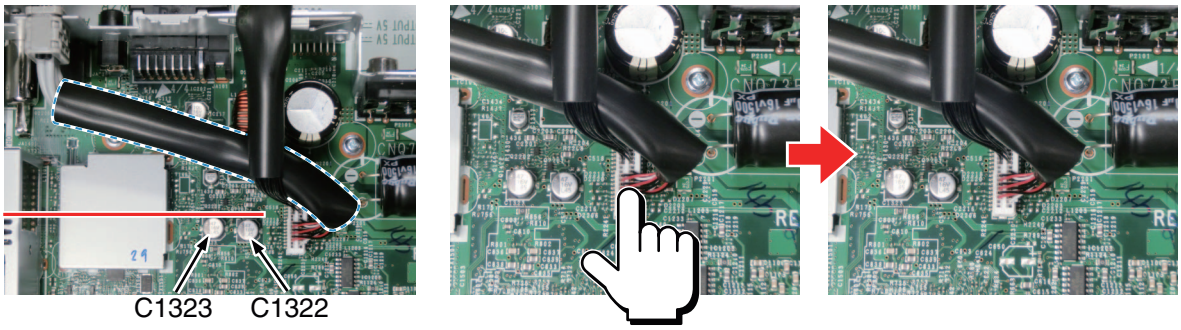

1 Remove the four screws.

2 Disconnect the connector and then remove the AV Unit.

Precaution on attachment of Shield Case (4200NEX/XNUC)

Shield Case (CND7003)

Check the Shield Case is surely soldered to the AV Unit.

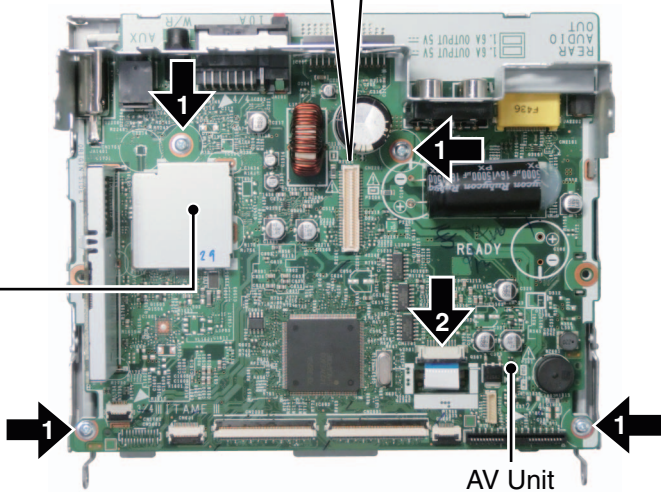

Precaution on styling of cables

Styling cables as like photo.

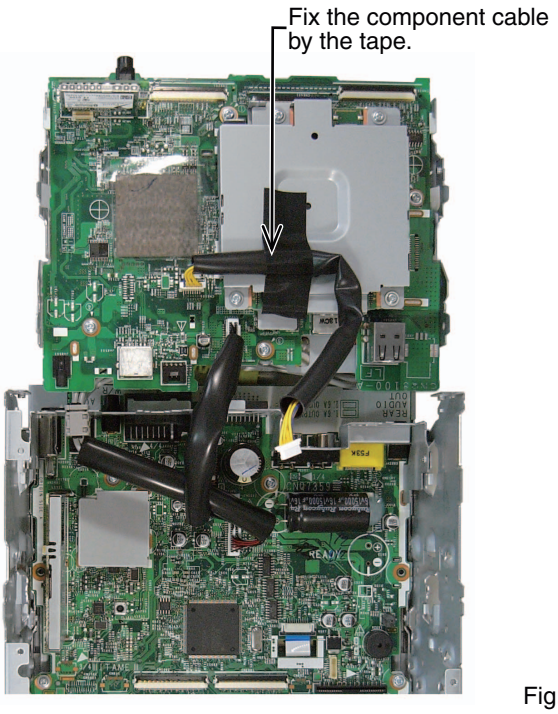

Fig.7

● Check point

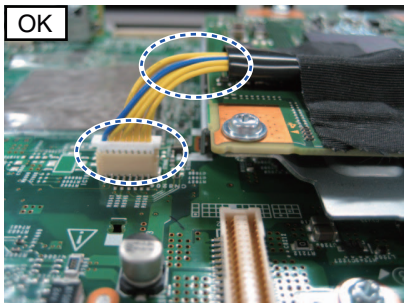

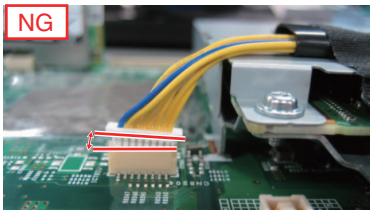

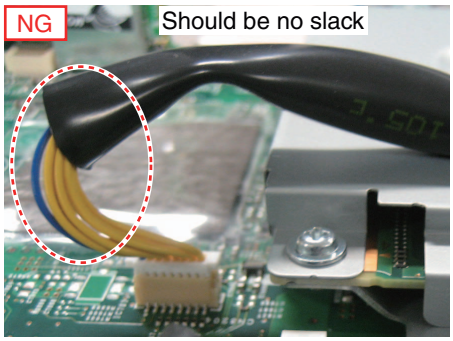

Set the cable on the left side of C104 as shown below.

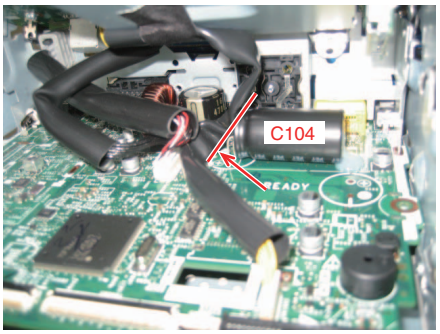

● Removing the PCB Assy (Service) (Fig.8)

1. Remove the two solders and then remove the two Cords.
2. Remove the Washer and then remove the Gear.
3. Remove the screw and then remove the PCB Assy (Service).

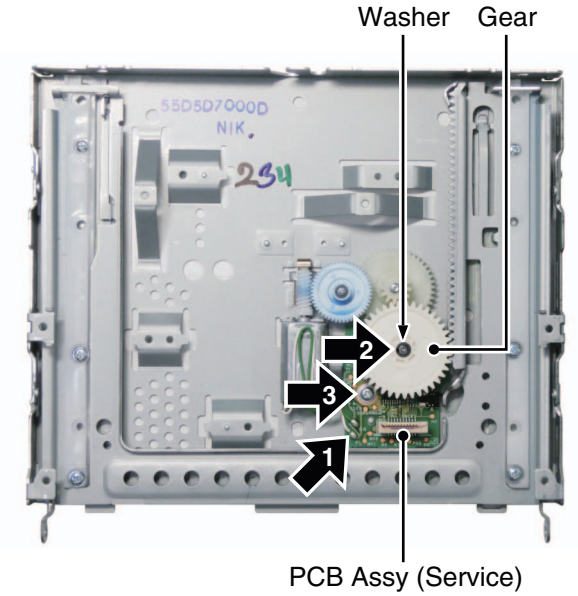

Precautions on attachment of Motor Unit.

While withdrawing a Motor Unit to the direction indicated by an arrow and tighten the screw to fix it. If you tighten the screw after withdrawing it to the opposite direction of the arrow, the pitch between Worm Gear and Worm Wheel opens up and the gear jumps due to drop of package and abnormal sound may be generated.

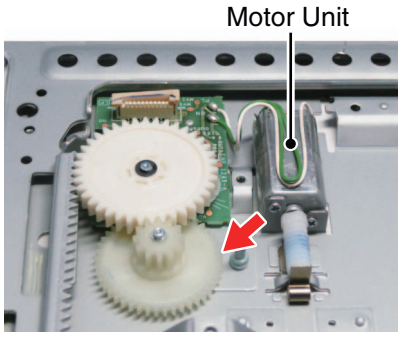

Fig.8

<<Drive Mechanism Unit Gear set position>>

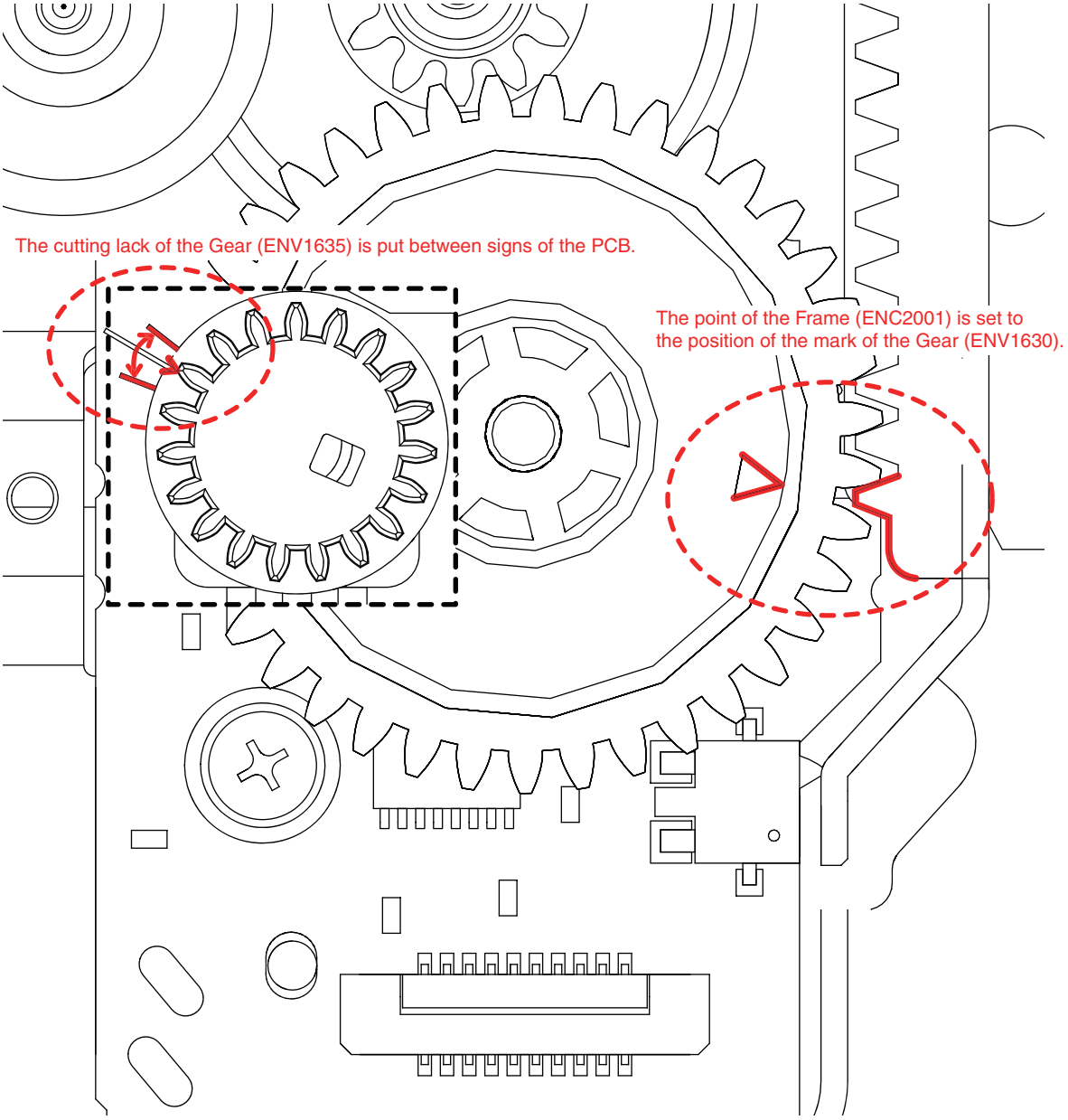

Confirm method
1. Test Mode is started.
2. "36. Confirmation of Drive Mechanism Close Position" is selected.
3. It is confirmed that check results are "OK". Please set position of the Gear again for "NG".

Fig.9

● Removing the Case Unit (Service) (Fig.10)

1. Remove the two screws and then remove the Cover.
2. Remove the two screws and then remove the Case Unit (Service).

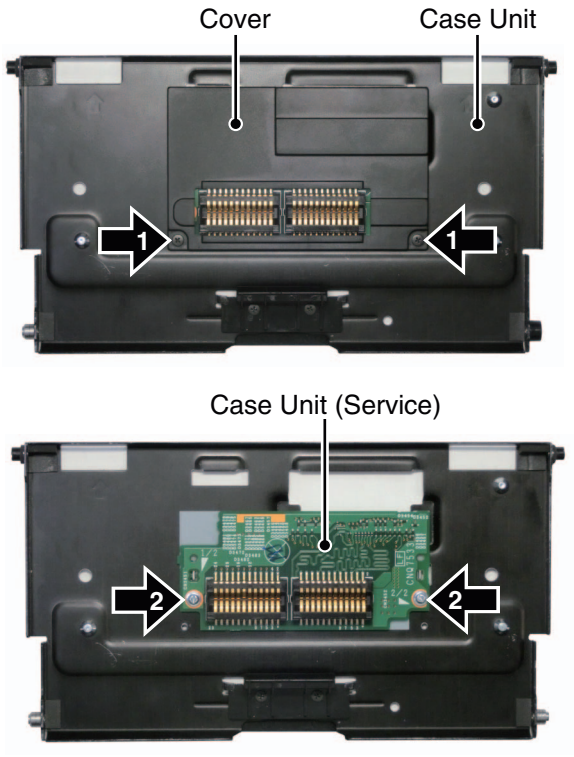

Fig.10

● Removing the SW Unit (Service) (Fig.11)

1. Remove the four screws.
2. Remove the screw.
3. Release the eleven latches.
4. Disconnect the connector and then remove the Cover.
5. Remove the two screws and then remove the Holder Unit and the SW Unit (Service).

Attention at assembly:
Attach the Harness to the latch on the Cover as shown in the below photo.

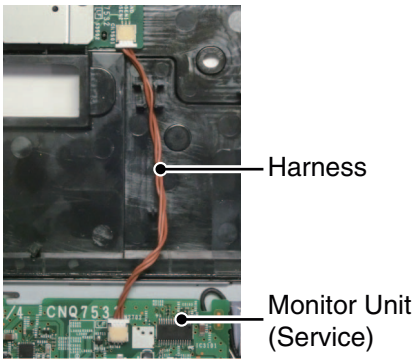

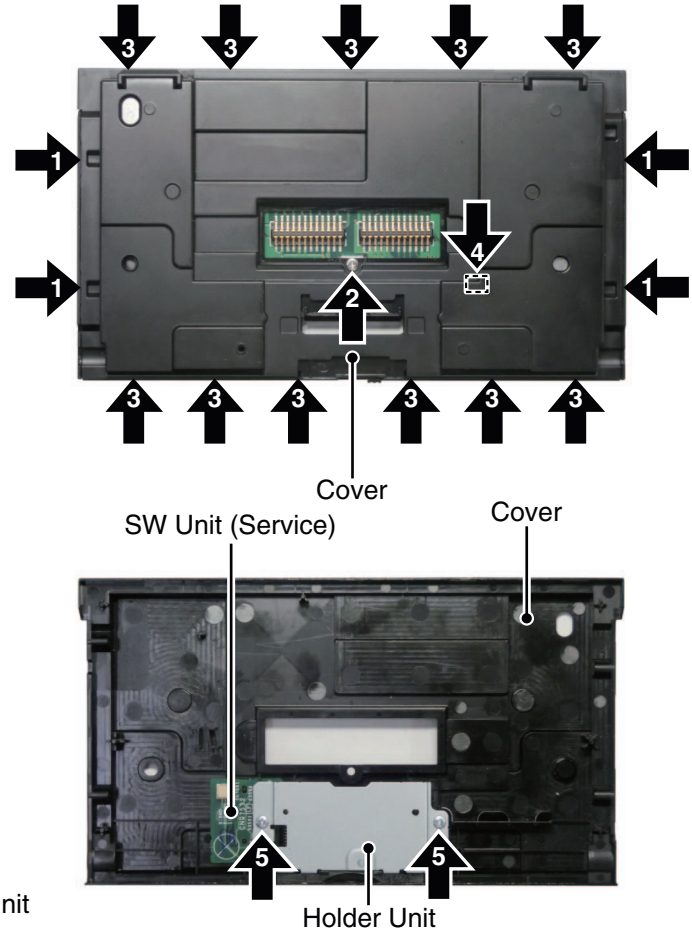

Fig.11

● Removing the Monitor Unit (Service) (Fig.12)

1. Disconnect the four connectors.
2. Remove the two screws and the two Plate Springs.
3. Remove the two screws and then remove the Monitor Unit (Service).

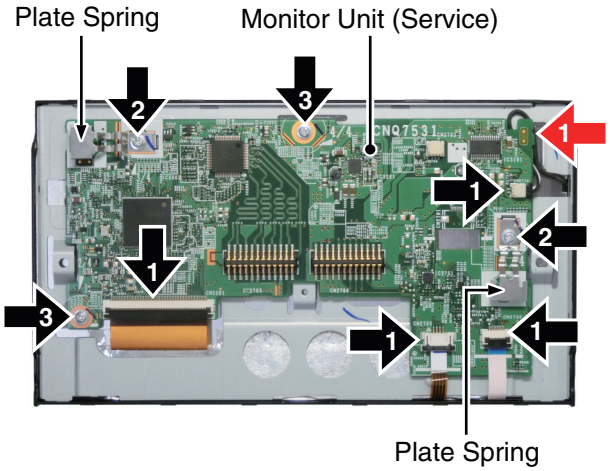

1. Attention at assembly:
Styling Cable under the Monitor Unit (Service).

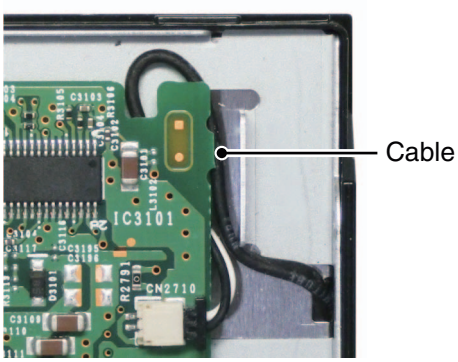

Fig.12

● Removing the Holder (Fig.13)

1 Release the four latches and then remove the Holder, TFT LCD and the Touch Panel.

Note:
With this model, the Cushion of Touch Panel was attached using a jig in the factory line.

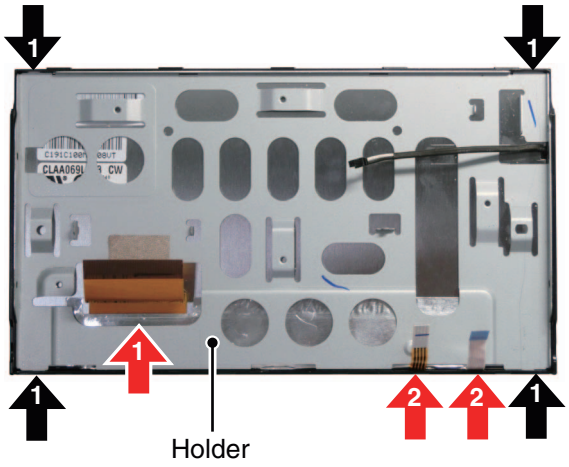

1 Attention at assembly:
Styling FPC as like photo.

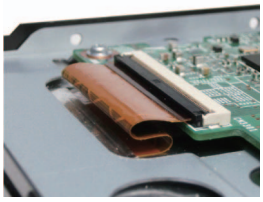

2 Attention at assembly:
Be careful of not pinching FPC and FFC from Key Unit (Service) and Touch Panel when you mount the Holder.

Precaution on attachment of Sheet

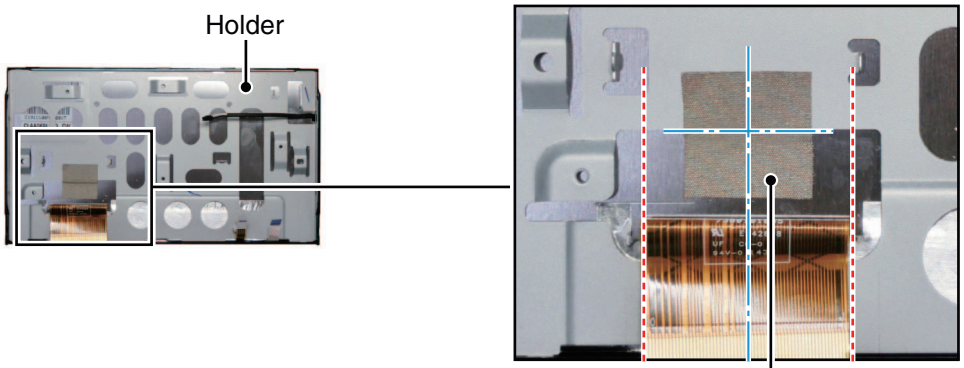

Sheet (CNN4869)
Affix the Sheet on the position shown in the above figure.

Fig.13

●Removing the Key Unit (Service) (Fig.14)

1 Release the five latches and then remove the Holder.

At that time, it becomes easy to remove by inserting a rod shape thing in red arrow mark direction.

Remove the Key Unit (Service).

After the Key Unit (Service) is replaced, check the following items.

- Check whether all LED's light up
- Check the operation of all switches
- Check the operation of light receiving part of the remote controller

1 Attention at assembly:
Be sure to insert the hooks at five Holder positions into holes on the Grille.

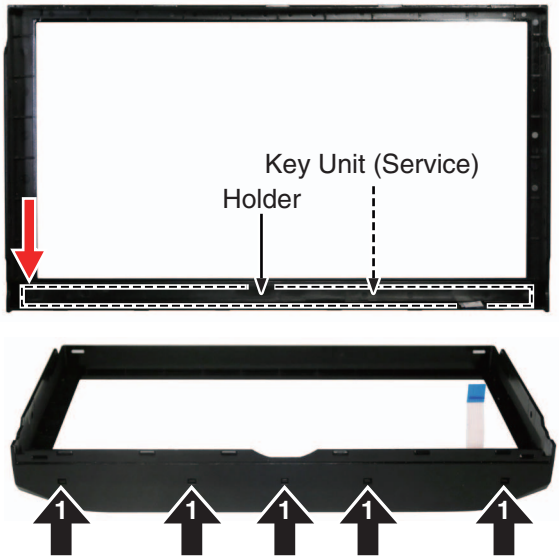

Fig.14

8. EACH SETTING AND ADJUSTMENT

8.1 ADJUSTMENT REQUIRED WHEN THE UNIT IS REPLACED

■ When any of the following assemblies is replaced, it is necessary to perform the adjustment.

LCD AV Unit Monitor Unit	→	"8.2 FLICKER ADJUSTMENT"
Touch Panel SOC Unit	→	"8.3 TOUCH PANEL TEST AND ADJUSTMENT"
SOC Unit Note: UC (North America) models only	→	"8.4 DEVICE NUMBER REWRITING"
DVD Core Unit	→	Refer to the DVD Mechanism manual CX-3311 (CRT5651), 5.1 DVD ADJUSTMENT"

8.2 FLICKER ADJUSTMENT

When replacing LCD, AV Unit or Monitor Unit, it is necessary to perform Flicker Adjustment.

Procedure for Flicker Adjustment

1. Enter the Test Mode.

   [How to enter the Test Mode for service]

   1. Download GGS1152 from the Service Site.
   2. Decompress the file.
   3. Copy the decompressed file to the root directory of USB memory.
   4. Connect the USB memory to USB Port1 of the unit and turn ACC ON.

2. Select and enter "16. Monitor Test" in Main Menu.

3. Select and enter "2. Adjust Flicker".

4. Minimize the flicker by changing adjustment value.

● Allocation of Key Operation

VOLUME+	: Flicker adjustment value increases
VOLUME-	: Flicker adjustment value decreases
MODE	: Return to Monitor Test Menu

● Description

COM DC	: Flicker adjustment value
FACTORY SETTING	: Initial value (factory setting)

Minimize the flicker by changing adjustment value.

8.3 TOUCH PANEL TEST AND ADJUSTMENT

When replacing SOC Unit or Touch Panel, it is necessary to perform Touch Panel Test and Adjustment

Procedure for Touch Panel Test

1. Enter the Test Mode.

   [How to enter the Test Mode for service]

   1. Download GGS1152 from the Service Site.
   2. Decompress the file.
   3. Copy the decompressed file to the root directory of USB memory.
   4. Connect the USB memory to USB Port1 of the unit and turn ACC ON.

2. Select and enter "16. Monitor Test" in Main Menu.

3. Select and enter "1. Touch Panel Test".

Note: If entering "Touch Panel Test", the Touch Panel Calibration Data on normal mode becomes invalid.

4. Execute "1. TP Effective Range".

5. Execute "2. Line Touch Test (Single)". If result is NG, execute "5. Calibration (Dual)" and "4.Calibration (Single)."

6. Execute "3. Line Touch Test (Dual)". If result is NG, execute "5. Calibration (Dual)" and "4. Calibration (Single)."

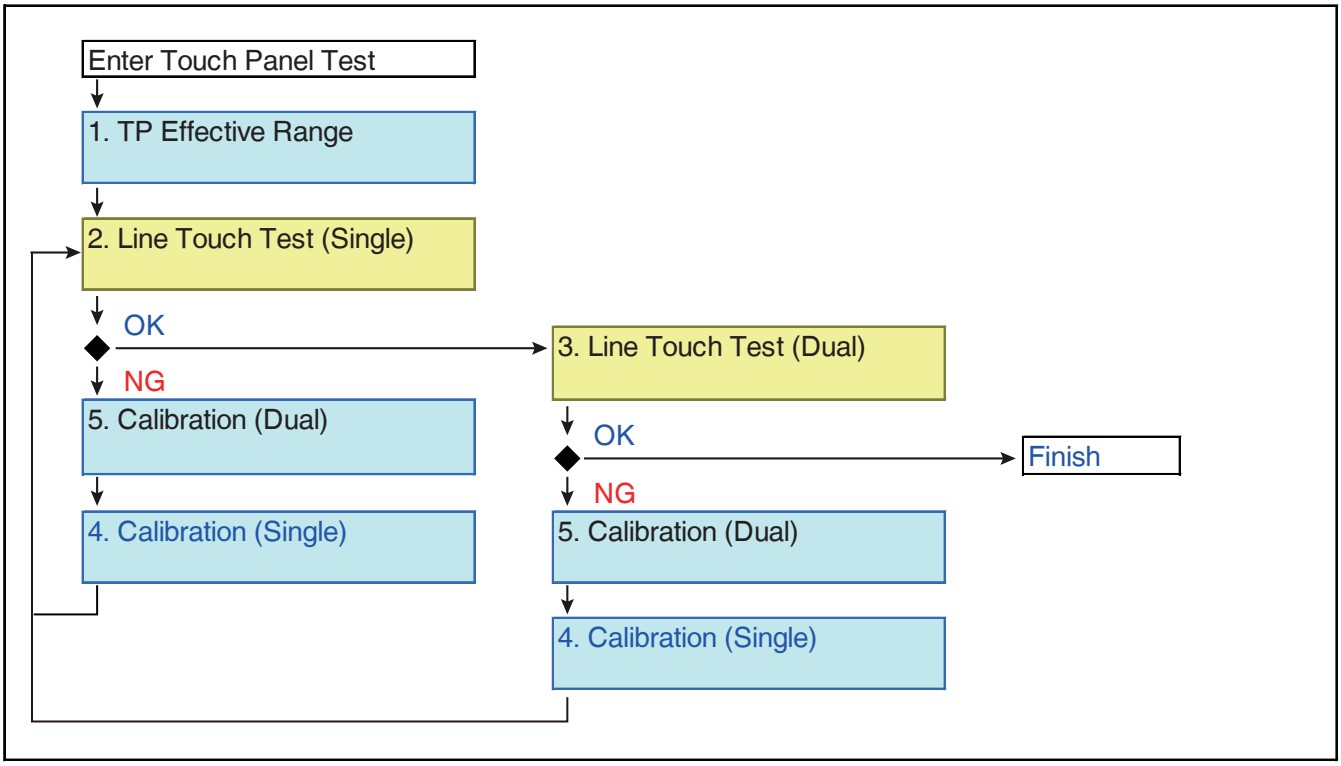

1. TP Effective Range

● Allocation of Key Operation

Mode: Stop and return to Touch Panel Test Menu

● Description

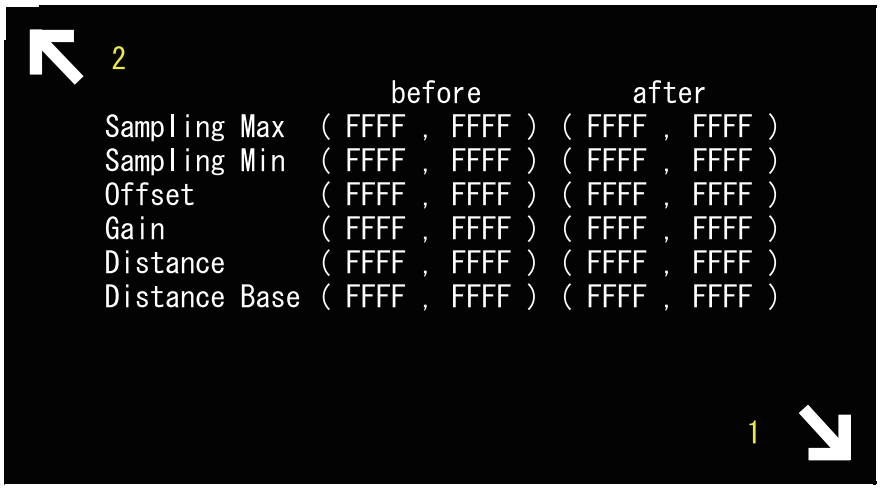

The outermost periphery coordinate is set by touching 2 points at lower right/upper left of the screen.

1. Touch the lower right corner of the screen.
2. Touch the upper left corner of the screen.

Result "OK" or "NG" is displayed after the adjustment.

NG: The entered coordinates are abnormal.

2. Line Touch Test (Single)

● Allocation of Key Operation

Mode: Stop and return to Touch Panel Test Menu

● Description

Touch the center of "+" mark. The target indicates the order (4 points).

Color of "+" mark is white.
When the input value is outside of the valid value, "+" mark turns red.

Result "OK" or "NG" is displayed after the test.
NG: Incorrect value is input three times.

3. Line Touch Test (Dual)

● Allocation of Key Operation

Mode: Stop and return to Touch Panel Test Menu

● Description

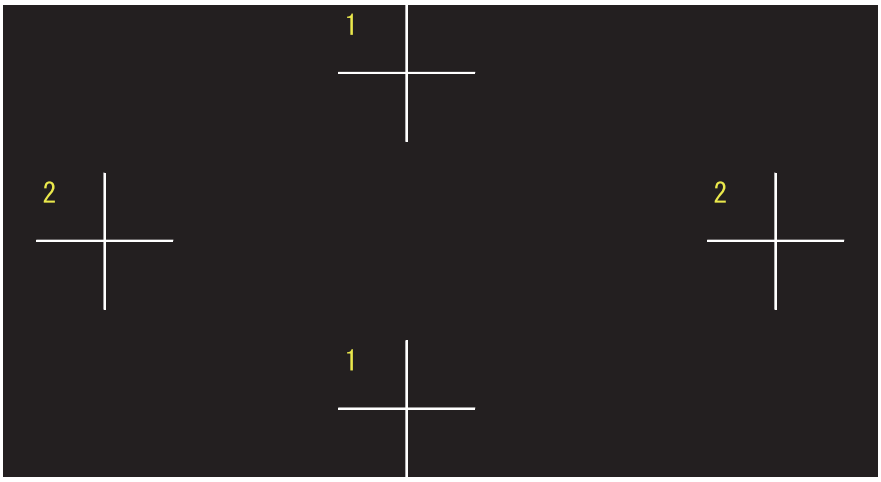

Touch two points of the center of "+" mark (dual touch).
The target indicates the order.

Color of "+" mark is white.
When the input value is outside of the valid value, "+" mark turns red.

Result "OK" or "NG" is displayed after the test.
NG: Incorrect value is input three times.

4. Calibration (Single)

● Allocation of Key Operation

Mode: Stop and return to Touch Panel Test Menu

● Description

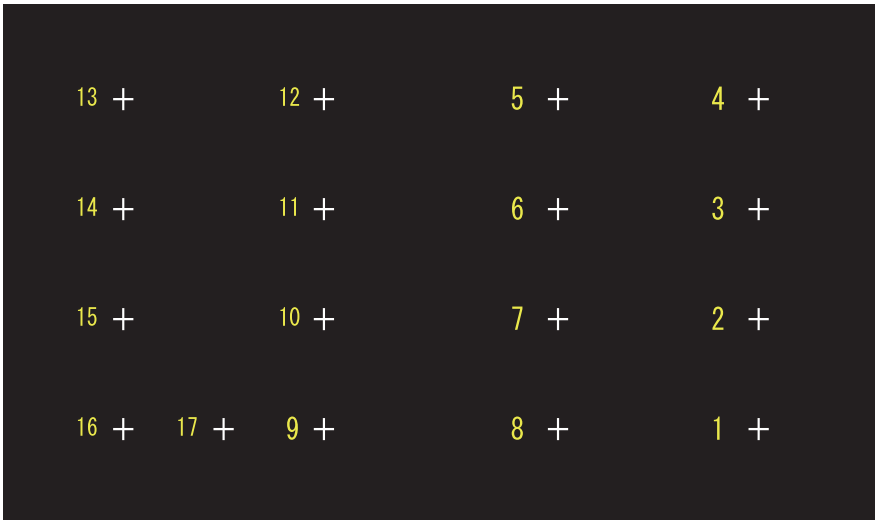

Touch the center of "+" mark. The target indicates the order (17 points).
When the calibration is completed correctly, "OK" is displayed.

5. Calibration (Dual)

● Allocation of Key Operation

Mode: Stop and return to Touch Panel Test Menu

● Description

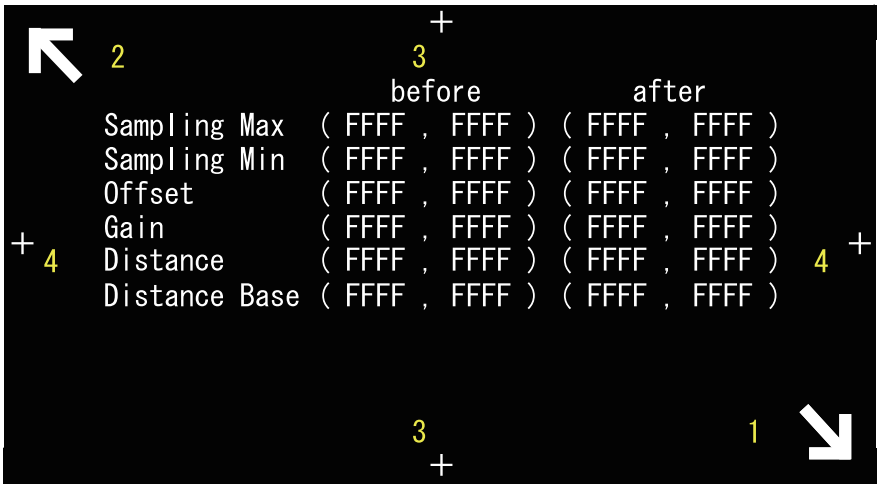

1. Touch the lower right corner of the screen.
2. Touch the upper left corner of the screen.
3. Touch two points of the center of "+" mark (top and bottom dual touch).
4. Touch two points of the center of "+" mark (right and left dual touch).

When the calibration is completed correctly, "OK" is displayed.

8.4 DEVICE NUMBER REWRITING (UC MODEL ONLY)

When replacing SOC UNIT, it is necessary to rewrite device number to original one for iDatalink user. Otherwise the activated iDatalink Maestro module will not be used due to mismatch of device number.

● About Device Number
Device Number of the unit is same as the serial number.
Check the serial number label of the unit.

● How to Rewrite Device Number

1. Enter the Test Mode.

[How to enter the Test Mode for service]

1. Download GGS1152 from the Service Site.
2. Decompress the file.
3. Copy the decompressed file to the root directory of USB memory.
4. Connect the USB memory to USB Port1 of the unit and turn ACC ON.

2. Select and enter "34. Device Number" in Main Menu.

3. Rewrite the serial number.

● Allocation of Key Operation

FORWARD	: Move Set Value cursor to right
REVERSE	: Move Set Value cursor to left
VOLUME+	: Change Set Value (+)
VOLUME-	: Change Set Value (-)
HOME & MODE	: Execute Device Number writing
MODE	: Return to Main Menu

● Description

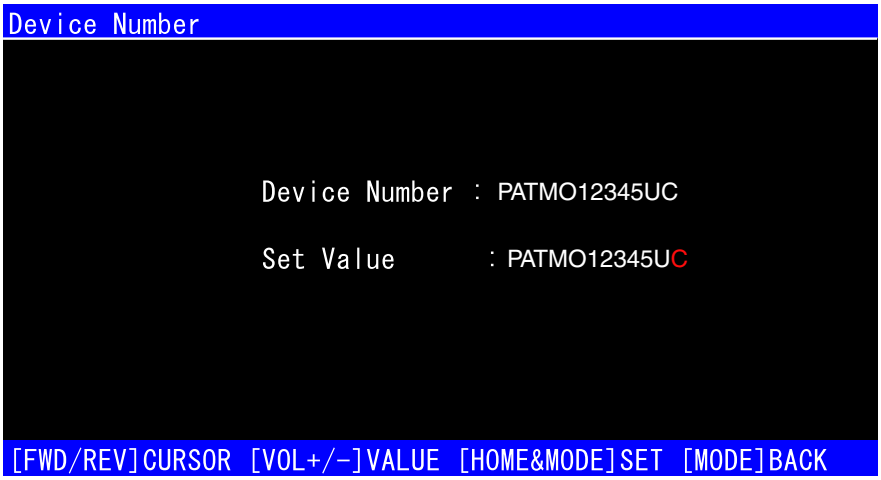

"Device Number" displays the currently written Device Number.
Set the Device Number (serial number of the unit) to "Set Value".

When [HOME] and [MODE] are pressed simultaneously, the writing is executed.
When the writing is completed, "Device Number" is updated.

If an error is detected, ERROR CODE is displayed.

Display	Description
4	Device Number writing is failed.
6	Acquisition of Device Number is failed.

9. EXPLODED VIEWS AND PARTS LIST

NOTES : • *Parts marked by " * " are generally unavailable because they are not in our Master Spare Parts List.*
• *The ⚠ mark found on some component parts indicates the importance of the safety factor of the part. Therefore, when replacing, be sure to use parts of identical designation.*
• *Screw adjacent to ▽ mark on the product are used for disassembly.*
• *For the applying amount of lubricants or glue, follow the instructions in this manual. (In the case of no amount instructions,apply as you think it appropriate.)*

9.1 PACKING

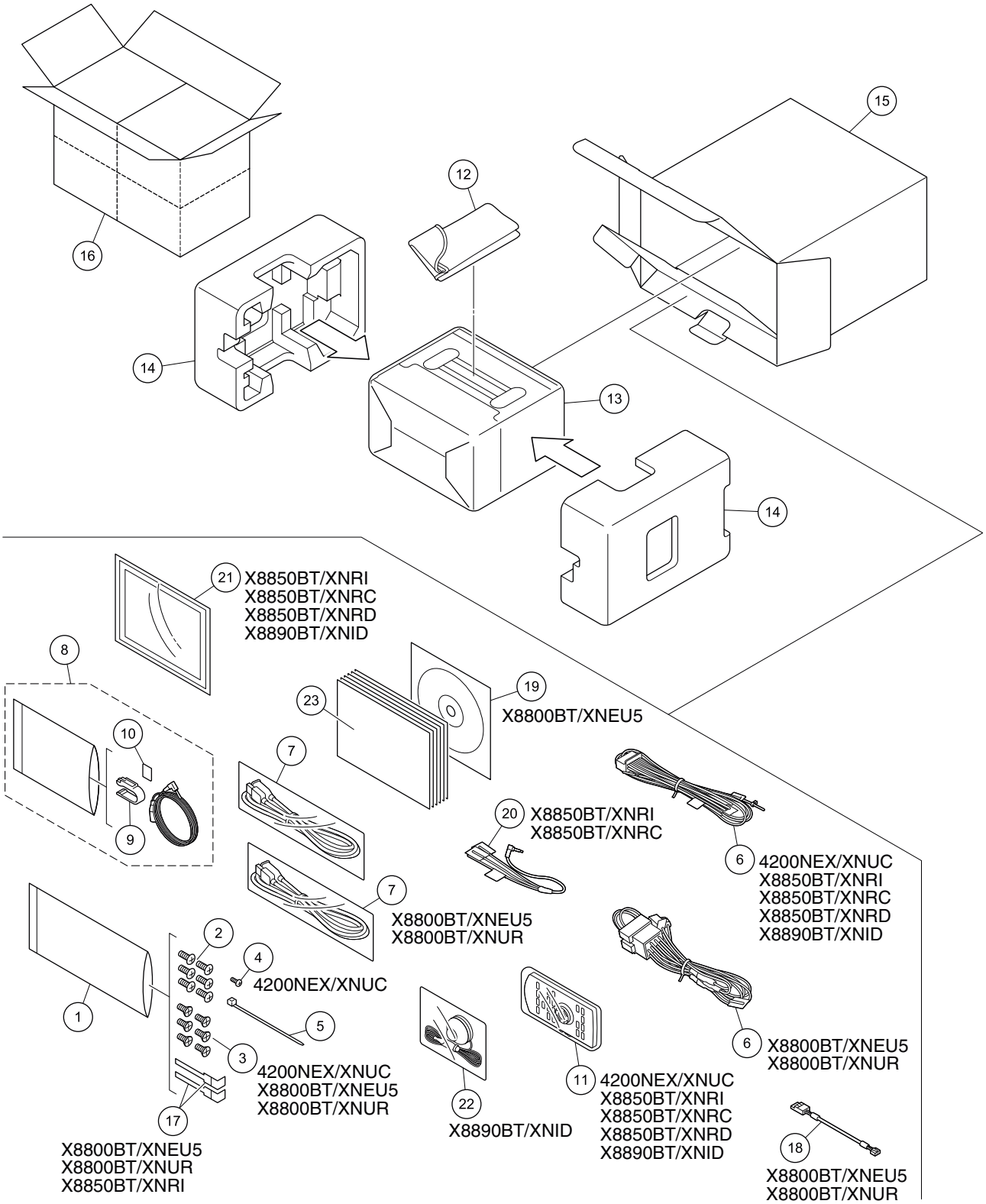

(1) PACKING SECTION PARTS LIST

Mark	No.	Description	Part No.
	1	Polyethylene Bag	CEG1160
	2	Screw	CBA2384
	3	Screw	See Contrast table (2)
	4	Screw	See Contrast table (2)
*	5	Lock Tie	CNW2429
	6	Cord Assy	See Contrast table (2)
	7	USB Extended Cable	See Contrast table (2)
	8	Microphone Assy	CPM1109
	9	Holder	CZN7192
	10	Cushion	CZN7193
	11	Card Remote Control Unit	See Contrast table (2)
	12	Detach Grille Case	YEG5016
	13	Cover	See Contrast table (2)
	14	Protector	See Contrast table (2)
	15	Unit Box	See Contrast table (2)
	16	Contain Box	See Contrast table (2)
	17	Handle	See Contrast table (2)
	18	Cord	See Contrast table (2)
	19	IM CD-ROM	See Contrast table (2)
	20	Cord Assy	See Contrast table (2)
	21	Panel	See Contrast table (2)
	22	Microphone Assy	See Contrast table (2)
*	23-1	Warranty Card	See Contrast table (2)
	23-2	Owner's Manual	See Contrast table (2)
*	23-3	Caution Card	See Contrast table (2)
*	23-4	Caution Card	See Contrast table (2)
	23-5	Quick Start Guide	See Contrast table (2)
	23-6	Installation Manual	See Contrast table (2)
*	23-7	Tag	See Contrast table (2)
*	23-8	Service Network	See Contrast table (2)
	23-9	Caution Card	CRP1510

(2) CONTRAST TABLE

AVH-4200NEX/XNUC, AVH-X8800BT/XNEU5, AVH-X8800BT/XNUR, AVH-X8850BT/XNRI, AVH-X8850BT/XNRC, AVH-X8850BT/XNRD and AVH-X8890BT/XNID are constructed the same except for the following:

Mark	No.	Description	AVH-4200NEX/XNUC	AVH-X8800BT/XNEU5	AVH-X8800BT/XNUR	AVH-X8850BT/XNRI	AVH-X8850BT/XNRC	AVH-X8850BT/XNRD	AVH-X8890BT/XNID
	3	Screw	CBA2383	CBA2383	CBA2383	Not used	Not used	Not used	Not used
	4	Screw	BPZ20P060FTC	Not used	Not used	Not used	Not used	Not used	Not used
	6	Cord Assy	CDP1665	CDP1670	CDP1670	CDP1665	CDP1665	CDP1665	CDP1665
	7	USB Extended Cable	CDP1587 (x1)	CDP1587 (x2)	CDP1587 (x2)	CDP1587 (x1)	CDP1587 (x1)	CDP1587 (x1)	CDP1587 (x1)
	11	Card Remote Control Unit	CXE5117	Not used	Not used	CXE5117	CXE5117	CXE5117	CXE5117
	13	Cover	CEG1359	CEG1356	CEG1356	CEG1356	CEG1356	CEG1356	CEG1356
	14	Protector	CHP4863	CHP4864	CHP4864	CHP4864	CHP4863	CHP4863	CHP4863
	15	Unit Box	CHG9211	CHG9215	CHG9216	CHG9217	CHG9212	CHG8923	CHG8924
	16	Contain Box	CHL9211	CHL9215	CHL9216	CHL9217	CHL9212	CHL8923	CHL8924
	17	Handle	Not used	CND6289	CND6289	CND6289	Not used	Not used	Not used
	18	Cord	Not used	CDP1669	CDP1669	Not used	Not used	Not used	Not used
	19	IM CD-ROM	Not used	CPJ1509	Not used	Not used	Not used	Not used	Not used
	20	Cord Assy	Not used	Not used	Not used	CDP1655	CDP1655	Not used	Not used
	21	Panel	Not used	Not used	Not used	CNS9475	CNS9475	CNS9475	CNS9475
	22	Microphone Assy	Not used	Not used	Not used	Not used	Not used	Not used	CPM1086
*	23-1	Warranty Card	QRY3001	CRY1376	CRY1376	Not used	Not used	Not used	CRY1304
	23-2	Owner's Manual	CRD4943	Not used	CRD4942	CRD4944	CRD4941	CRD4945	CRD4946
*	23-3	Caution Card	CRP1502	CRP1502	CRP1502	CRP1503	CRP1503	CRP1503	CRP1503
*	23-4	Caution Card	Not used	CRP1441	Not used	Not used	Not used	Not used	Not used
	23-5	Quick Start Guide	Not used	CRD4939	Not used	Not used	Not used	Not used	Not used
	23-6	Installation Manual	Not used	CRD4940	Not used	Not used	Not used	Not used	Not used
*	23-7	Tag	Not used	CRW1881	CRW1881	Not used	Not used	Not used	Not used
*	23-8	Service Network	Not used	Not used	Not used	Not used	Not used	Not used	CRY1305

Owner's Manual, Quick Start Guide, Installation Manual

Part No.	Language
CRD4943	English(Great Britain), French, Spanish(Espanol)
CRD4942	Russian
CRD4944	English(Great Britain), Arabic, Persian
CRD4941	English(Great Britain), Traditional Chinese
CRD4945	English(Great Britain), Spanish(Mexicano), Portuguese(B)
CRD4939	English(Great Britain), French, Italian, Spanish(Espanol), German, Dutch
CRD4940	English(Great Britain), French, Italian, Spanish(Espanol), German, Dutch

CONTENTS OF CD-ROM (Operation Manual), CPJ1509

Part No.	Language
* CRB4770	English(Great Britain)
* CRB4771	French
* CRB4772	Italian
* CRB4773	Spanish(Espanol)
* CRB4774	German
* CRB4775	Dutch
* CRB4776	Swedish
* CRB4777	Norwegian
* CRB4778	Finnish
* CRB4779	Danish
* CRB4780	Portuguese
* CRB4781	Greek
* CRB4782	Turkish

All operation manuals are supplied in PDF files by the CD-ROM.
Regarding the availability of paper manual, contact Pioneer Service representative in your region.

9.2 EXTERIOR (1)

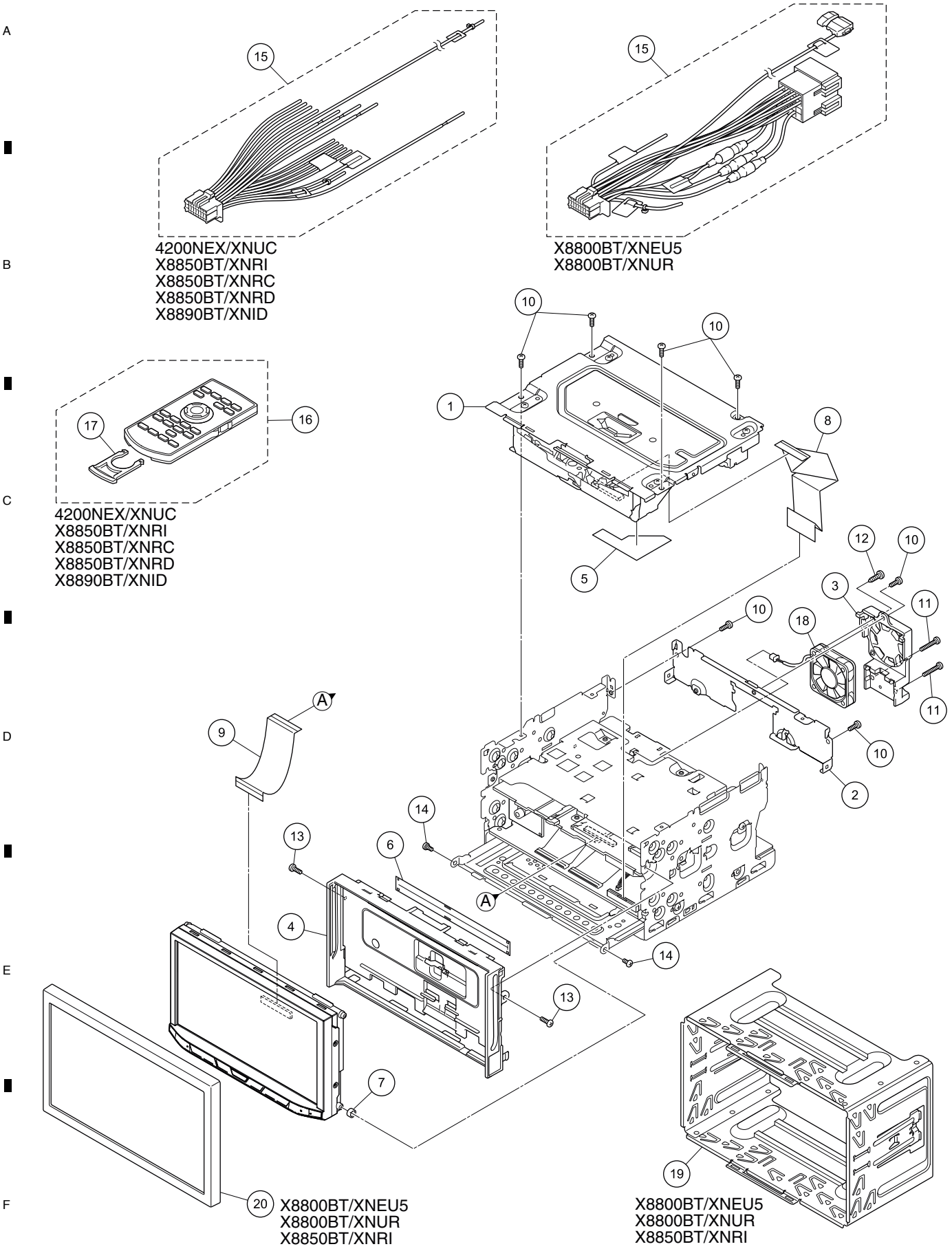

(1) EXTERIOR (1) SECTION PARTS LIST

Mark	No.	Description	Part No.
	1	DVD Mechanism Module (LS2.5)	CXK8102
	2	Holder	CND6989
	3	Heat Sink	CNR2165
	4	Panel	See Contrast table (2)
	5	Insulator	CNN4613
	6	Cover	CNN4866
	7	Collar	CNW2038
	8	FFC	CDD1033
	9	FFC	CDD1039
	10	Screw	BSZ26P060FTC
	11	Screw	BSZ26P120FTC
	12	Screw	BPZ30P080FTC
	13	Screw	ISS26P055FTC
	14	Screw	CBA1735
	15	Cord Assy	See Contrast table (2)
	16	Card Remote Control Unit	See Contrast table (2)
	17	Battery Cover	See Contrast table (2)
	18	Fan Motor	See Contrast table (2)
	19	Holder	See Contrast table (2)
	20	Panel	See Contrast table (2)

(2) CONTRAST TABLE

AVH-4200NEX/XNUC, AVH-X8800BT/XNEU5, AVH-X8800BT/XNUR, AVH-X8850BT/XNRI, AVH-X8850BT/XNRC, AVH-X8850BT/XNRD and AVH-X8890BT/XNID are constructed the same except for the following:

Mark	No.	Description	AVH-4200NEX/XNUC	AVH-X8800BT/XNEU5	AVH-X8800BT/XNUR	AVH-X8850BT/XNRI	AVH-X8850BT/XNRC	AVH-X8850BT/XNRD	AVH-X8890BT/XNID
	4	Panel	CNU3147	CNU3219	CNU3219	CNU3220	CNU3220	CNU3220	CNU3220
	15	Cord Assy	CDP1665	CDP1670	CDP1670	CDP1665	CDP1665	CDP1665	CDP1665
	16	Card Remote Control Unit	CXE5117	Not used	Not used	CXE5117	CXE5117	CXE5117	CXE5117
	17	Battery Cover	CNU1624	Not used	Not used	CNU1624	CNU1624	CNU1624	CNU1624
	18	Fan Motor	CXM1449	CXM1449	CXM1449	CXM1449	CXM1449	CXM1449	CXM1446
	19	Holder	Not used	CND7102	CND7102	CND7102	Not used	Not used	Not used
	20	Panel	Not used	CNU2645	CNU2645	CNU2645	Not used	Not used	Not used

9.3 EXTERIOR (2)

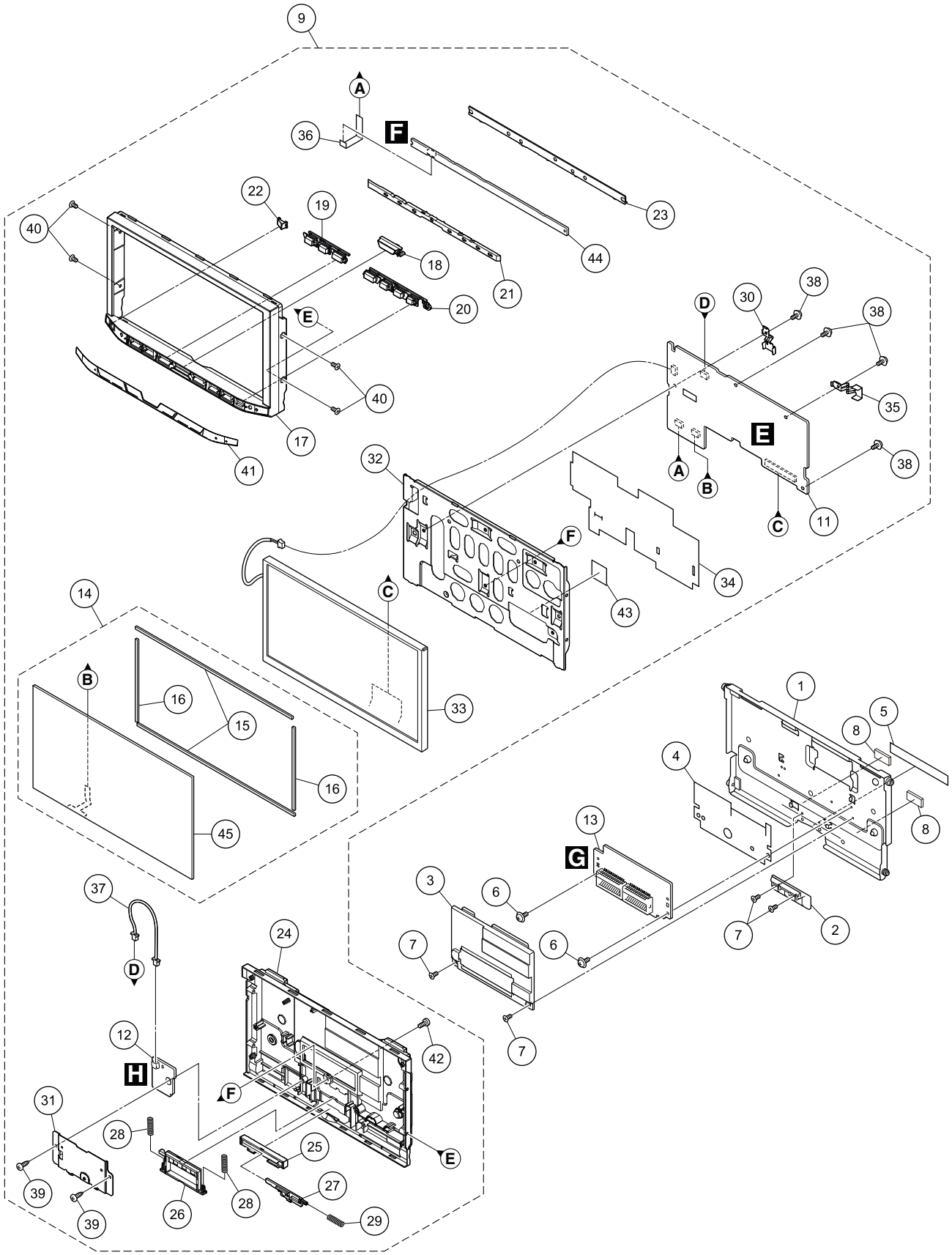

(1) EXTERIOR (2) SECTION PARTS LIST

Mark	No.	Description	Part No.
	1	Case Unit	CXE6925
	2	Holder	CNW2424
	3	Cover	CNW2425
	4	Insulator	CNN4611
	5	Cover	CNN4167
	6	Screw	AMZ20P030FTC
	7	Screw (M2 x 3)	CBA1877
	8	Cushion	CNN5291
	9	Detach Monitor Assy	See Contrast table (2)
	10	•••••	
	11	Monitor Unit (Service)	CXX8726
	12	SW Unit (Service)	CXX8728
	13	Case Unit (Service)	CXX8729
	14	Touch Panel Unit	CXE7770
	15	Cushion	CNN4271
	16	Cushion	CNN4272
	17	Grille	CNU3245
	18	Button (HOME)	CAI4318
	19	Button	CAI4319
	20	Button	CAI4320
	21	Lighting Conductor	CNW3102
	22	Lighting Conductor	CNW3103
	23	Holder	CNW3104
	24	Cover	CNU3246
	25	Button (DETACH)	CAI3743
	26	Lever	CNW2422
	27	Lever	CNW2423
	28	Spring	CBH3099
	29	Spring	CBH3100
	30	Plate Spring	CBL1832
	31	Holder Unit	CXE4883
	32	Holder	CND7429
	33	TFT LCD	CWX4781
	34	Insulator	CNN4610
	35	Plate Spring	CBL1833
	36	FFC	CDD1038
	37	Harness	CDE9563
	38	Screw	AMZ20P030FTC
	39	Screw	BPZ20P060FTC
	40	Screw	CBA2132
	41	Plate	See Contrast table (2)
	42	Screw (M2 x 3)	CBA1797
	43	Sheet	CNN4869
	44	Key Unit (Service)	CXX8724
	45	Touch Panel	CSX1241

(2) CONTRAST TABLE

AVH-4200NEX/XNUC, AVH-X8800BT/XNEU5, AVH-X8800BT/XNUR, AVH-X8850BT/XNRI, AVH-X8850BT/XNRC, AVH-X8850BT/XNRD and AVH-X8890BT/XNID are constructed the same except for the following:

Mark	No.	Description	AVH-4200NEX/XNUC	AVH-X8800BT/XNEU5	AVH-X8800BT/XNUR	AVH-X8850BT/XNRI	AVH-X8850BT/XNRC	AVH-X8850BT/XNRD	AVH-X8890BT/XNID
	9	Detach Monitor Assy	CXE9130	CXE9127	CXE9127	CXE9129	CXE9129	CXE9129	CXE9129
	41	Plate	CNN5216	CNN5215	CNN5215	CNN5217	CNN5217	CNN5217	CNN5217

9.4 EXTERIOR (3)

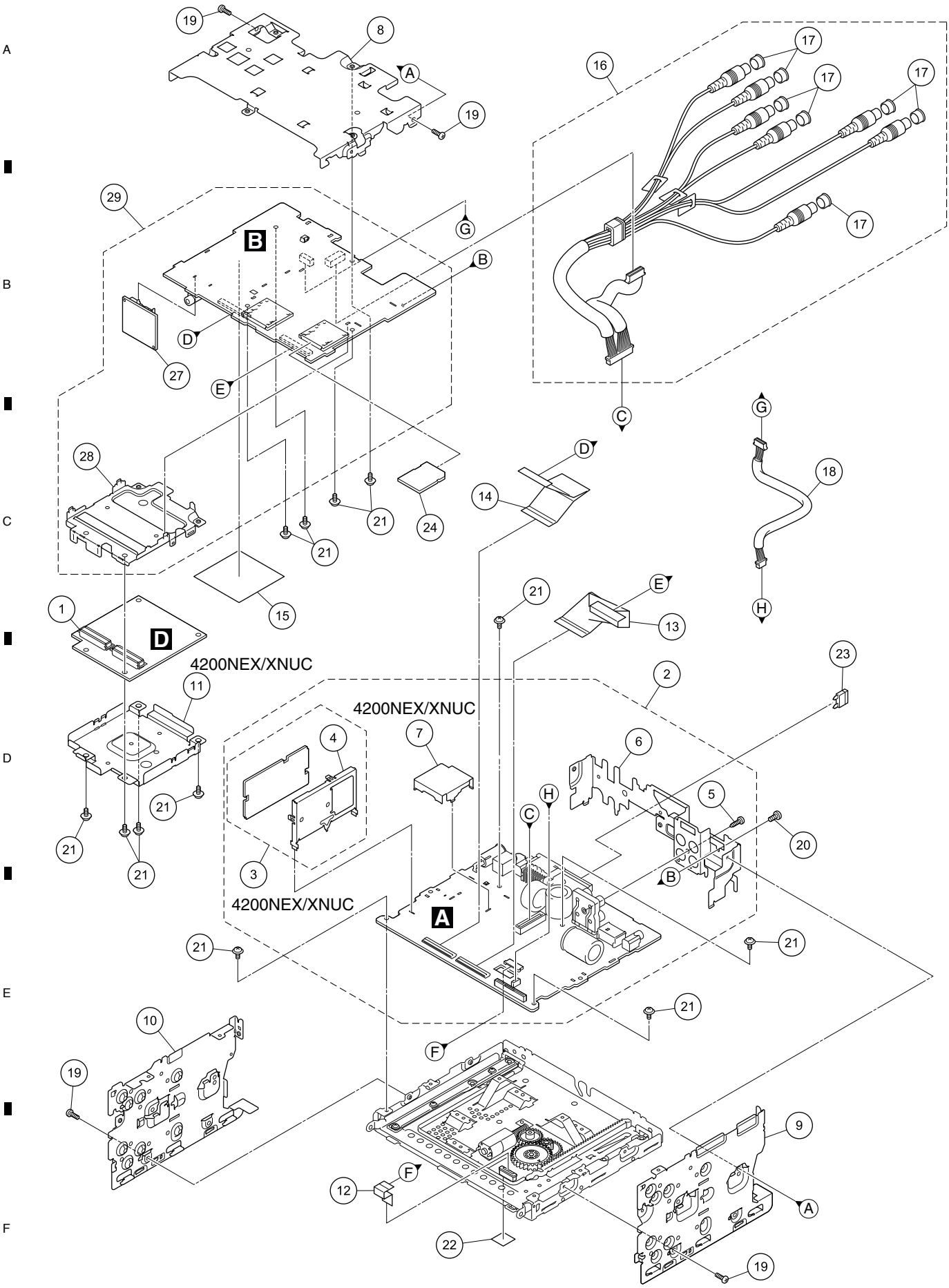

(1) EXTERIOR (3) SECTION PARTS LIST

Mark	No.	Description	Part No.
	1	SOC Single Core Unit	CWN9904
	2	AV Unit	See Contrast table (2)
	3	BE Core Unit (U1701)	See Contrast table (2)
	4	Holder	See Contrast table (2)
	5	Screw	BPZ26P080FTC
	6	Holder	See Contrast table (2)
	7	Shield Case	See Contrast table (2)
	8	Holder	CND6984
	9	Bracket	CND6985
	10	Bracket	CND6986
	11	Shield Case	See Contrast table (2)
	12	FFC	CDD1034
	13	FFC	CDD1035
	14	FFC	CDD1036
	15	Sheet	CNN4830
	16	Cable Assy	CDF1078
	17	Cap	CNV6727
	18	Cable Assy	CDF1197
	19	Screw	BSZ26P060FTC
	20	Screw	BMZ30P060FTC
	21	Screw	ASZ26P050FTC
	22	Label	CNN3533
⚠	23	Fuse (10 A)	YEK5001
	24	Service Strage SD Assy	CXX8739
	25	•••••	
	26	•••••	
	27	BT Module	CWX4710
	28	Holder	CND6987
	29	IF Unit (Service)	See Contrast table (2)

(2) CONTRAST TABLE

AVH-4200NEX/XNUC, AVH-X8800BT/XNEU5, AVH-X8800BT/XNUR, AVH-X8850BT/XNRI, AVH-X8850BT/XNRC, AVH-X8850BT/XNRD and AVH-X8890BT/XNID are constructed the same except for the following:

Mark	No.	Description	AVH-4200NEX/XNUC	AVH-X8800BT/XNEU5	AVH-X8800BT/XNUR	AVH-X8850BT/XNRI	AVH-X8850BT/XNRC	AVH-X8850BT/XNRD	AVH-X8890BT/XNID
	2	AV Unit	CWN9901	CWN9896	CWN9902	CWN9900	CWN9898	CWN9899	CWN9897
	3	BE Core Unit (U1701)	CWE2518	Not used	Not used	Not used	Not used	Not used	Not used
	4	Holder	CND7288	Not used	Not used	Not used	Not used	Not used	Not used
	6	Holder	CND6990	CND7001	CND7001	CND6991	CND6991	CND6991	CND6991
	7	Shield Case	CND7003	Not used	Not used	Not used	Not used	Not used	Not used
	11	Shield Case	CND6988	Not used	Not used	Not used	Not used	Not used	Not used
	29	IF Unit (Service)	CXX8721	CXX8719	CXX8722	CXX8720	CXX8720	CXX8720	CXX8720

9.5 EXTERIOR (4)

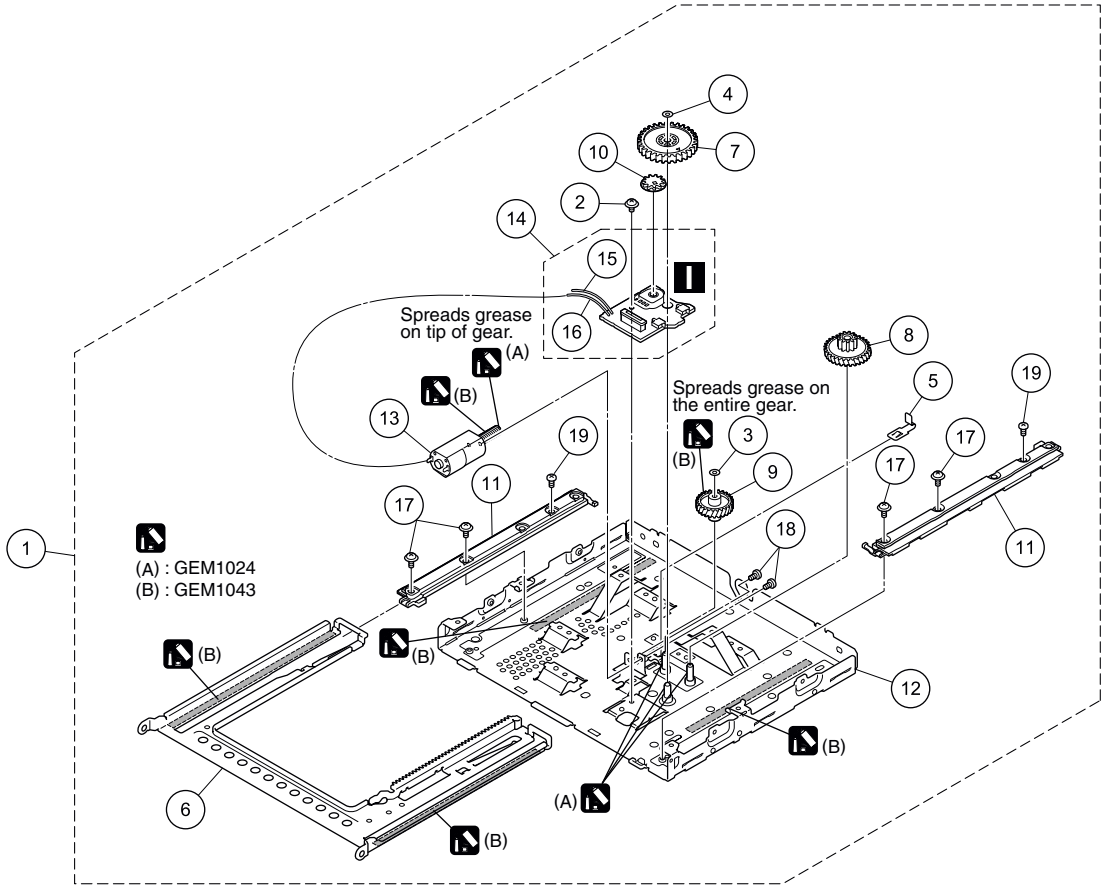

EXTERIOR (4) SECTION PARTS LIST

Mark	No.	Description	Part No.
	1	Drive Mechanism Unit	CXE7000
	2	Screw	AMZ26P030FTC
	3	Washer	CBF1039
	4	Washer	CBF1064
	5	Spring	EBL1034
	6	Frame	ENC2001
	7	Gear	ENV1630
	8	Gear	ENV1631
	9	Gear	ENV1632
	10	Gear	ENV1635
	11	Guide	ENV3001
*	12	Chassis Unit	EXA4027
	13	Motor Unit	EXA4003
	14	PCB Assy (Service)	EXX2001
*	15	Cord (Green)	CDC1056
*	16	Cord (White)	CDC1057
	17	Screw	IMS26P060FTC
	18	Screw	JFZ20P025FTC
	19	Screw	EBA2002

9.6 DVD MECHANISM MODULE (1)

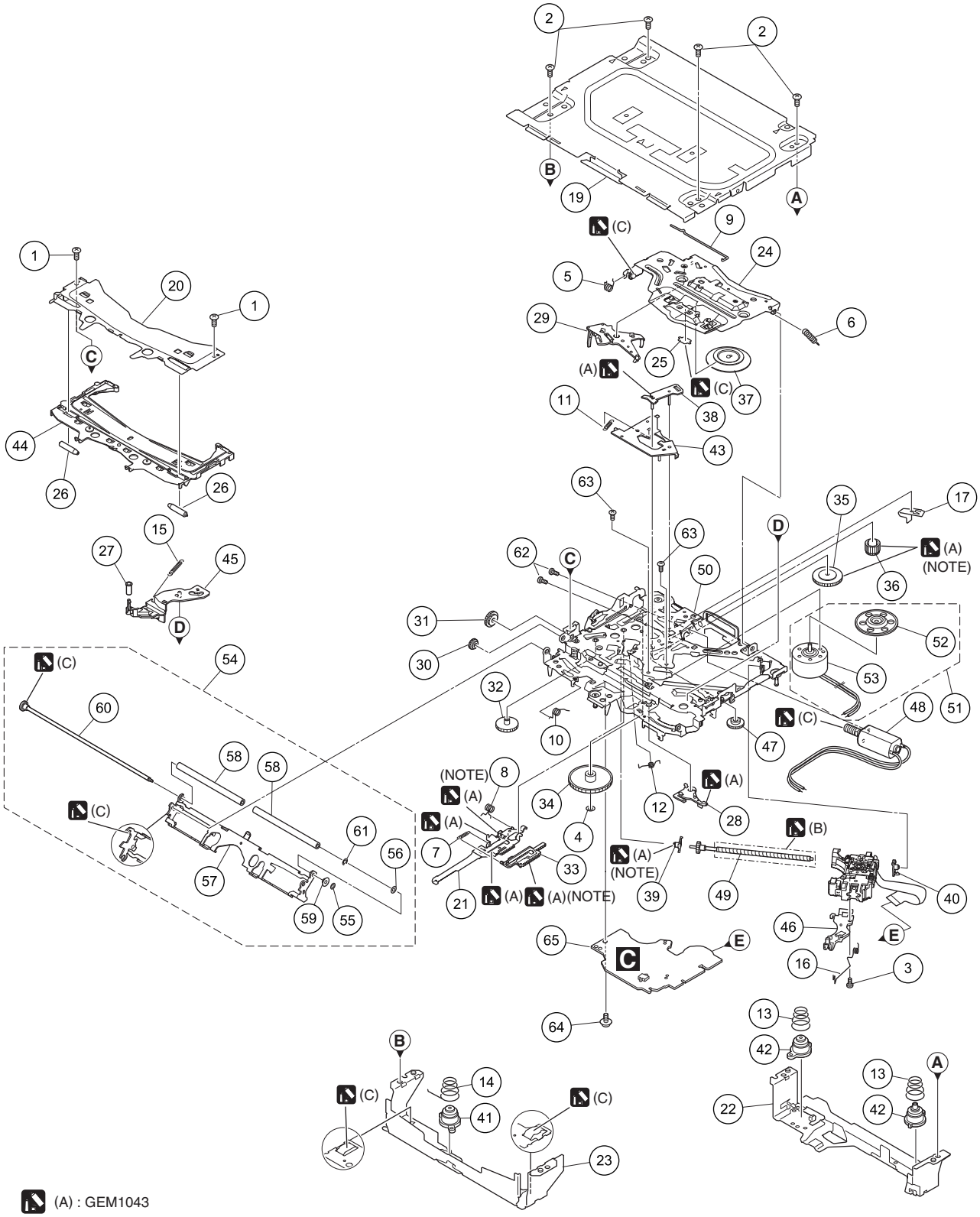

(NOTE) Apply grease to the whole part.

DVD MECHANISM MODULE (1) SECTION PARTS LIST

Mark	No.	Description	Part No.
	1	Screw	BSZ20P040FTC
	2	Screw	BSZ26P060FTC
	3	Screw (M2 x 4)	CBA1835
	4	Washer	CBF1038
	5	Spring	CBH2855
	6	Spring	CBH2860
	7	Spring	CBH3010
	8	Spring	CBH3011
	9	Spring	CBH3014
	10	Spring	CBH3015
	11	Spring	CBH3016
	12	Spring	CBH3017
	13	Spring	CBH3019
	14	Spring	CBH3086
	15	Spring	CBH3095
	16	Spring	CBH3096
	17	Plate Spring	CBL1824
	18	•••••	
	19	Case	CNB3928
	20	Bracket	CND4553
	21	Lever	CND7225
	22	Bracket	CND5710
	23	Bracket	CND6127
	24	Arm	CND7224
	25	Sheet	CNN3678
	26	Roller	CNW1172
	27	Roller	CNW1175
	28	Arm	CNW1177
	29	Arm	CNW1178
	30	Gear	CNW1180
	31	Gear	CNW1181
	32	Gear	CNW1183
	33	Rack	CNW1184
	34	Gear	CNW1185
	35	Gear	CNW1186
	36	Gear	CNW1187
	37	Clamper	CNW1190
	38	Arm	CNW1192
	39	Holder	CNW1193
	40	Holder	CNW1194
	41	Damper	CNW2439
	42	Damper	CNW2440
	43	Arm	CNW1726
	44	Guide	CNW3489
	45	Arm	CNW2241
	46	Rack	CNW2265
	47	Gear	CNW2287
	48	Motor Unit	CXC4026
	49	Screw Unit	CXC8894
	50	Chassis Unit	CXE8407
	51	•••••	
*	52	Support Wheel	CNW2052
*	53	Spindle Motor	EXM2002
	54	Arm Assy	CXE7890
	55	Washer	CBF1037
	56	Washer	CBF1038
	57	Arm	CND6779
	58	Roller	CNW2500
	59	Collar	CNW2444
	60	Gear Unit	CXE6225
	61	E Ring	YE15FTC
	62	Screw	JFZ20P025FTC
	63	Screw	JGZ17P020FTC
	64	Screw (M2 x 5)	EBA1028
	65	DVD Core Unit	CWX4717

Pickup, Spindle Motor and Support Wheel are not available as service parts, because they need adjustment by special equipment after replacing.

9.7 DVD MECHANISM MODULE (2)

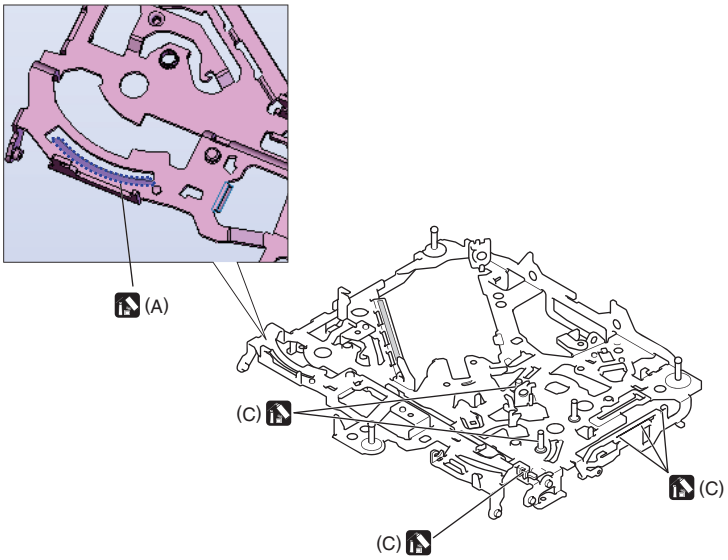

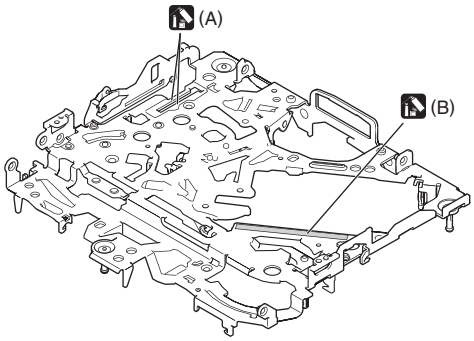

(A) : GEM1043

(B) : GEM1045

(C) : GEM1024

10. SCHEMATIC DIAGRAM

Note: When ordering service parts, be sure to refer to " EXPLODED VIEWS AND PARTS LIST" or "ELECTRICAL PARTS LIST".

NOTE :
- Symbol indicates a resistor. No differentiation is made between chip resistors and discrete resistors.
- Symbol indicates a capacitor. No differentiation is made between chip capacitors and discrete capacitors.

The ⚠ mark found on some component parts indicates the importance of the safety factor of the part. Therefore, when replacing, be sure to use parts of identical designation.

: The power supply is shown with the marked box.

MODEL

A	AVH-4200NEX/XNUC
B	AVH-X8800BT/XNEU5
C	AVH-X8800BT/XNUR
D	AVH-X8850BT/XNRI
E	AVH-X8850BT/XNRC
F	AVH-X8850BT/XNRD
G	AVH-X8890BT/XNID

A 1/20 AV UNIT (S VEHICLE IF)

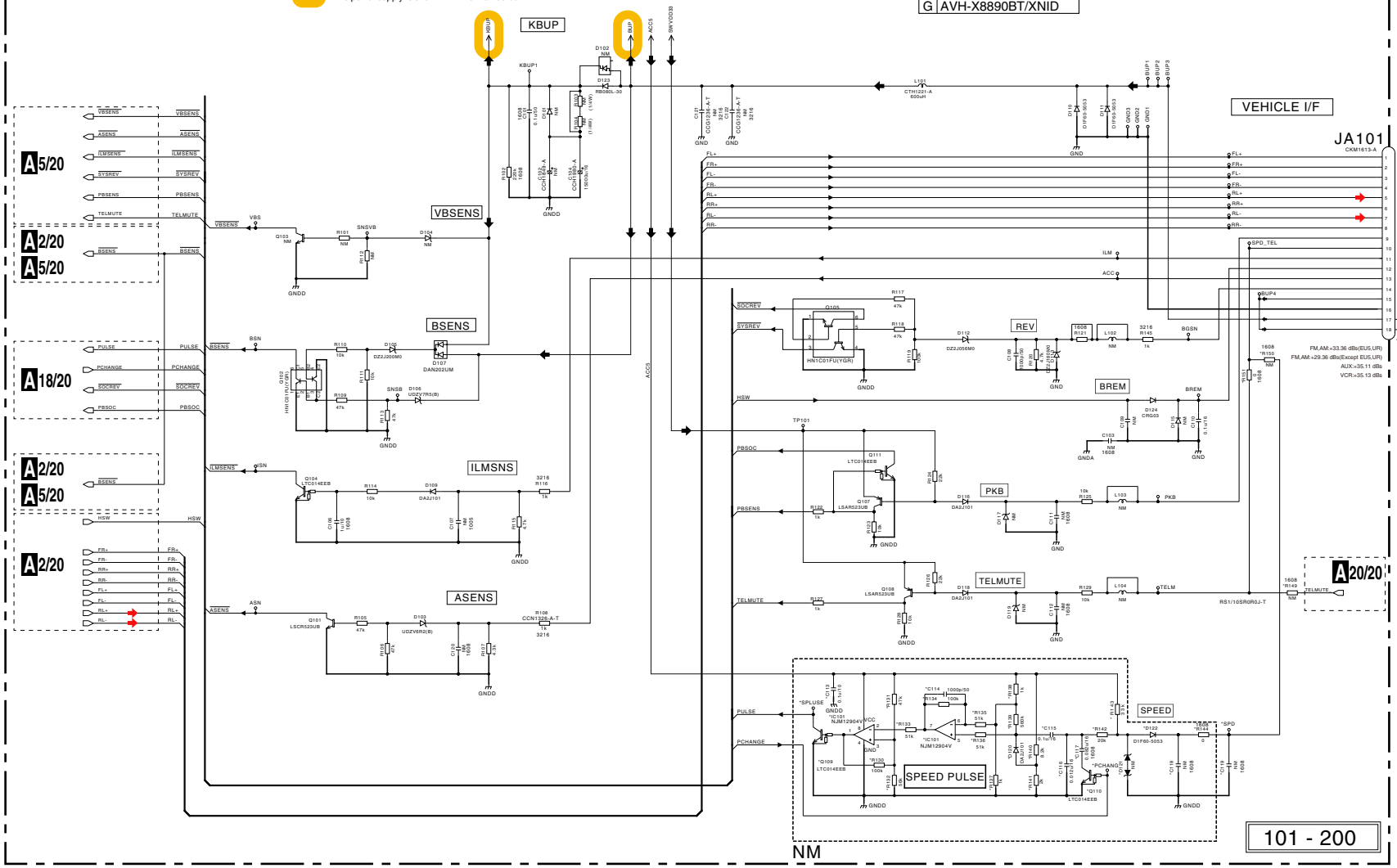

POWER SUPPLY

AVH-4200NEX/XNUC

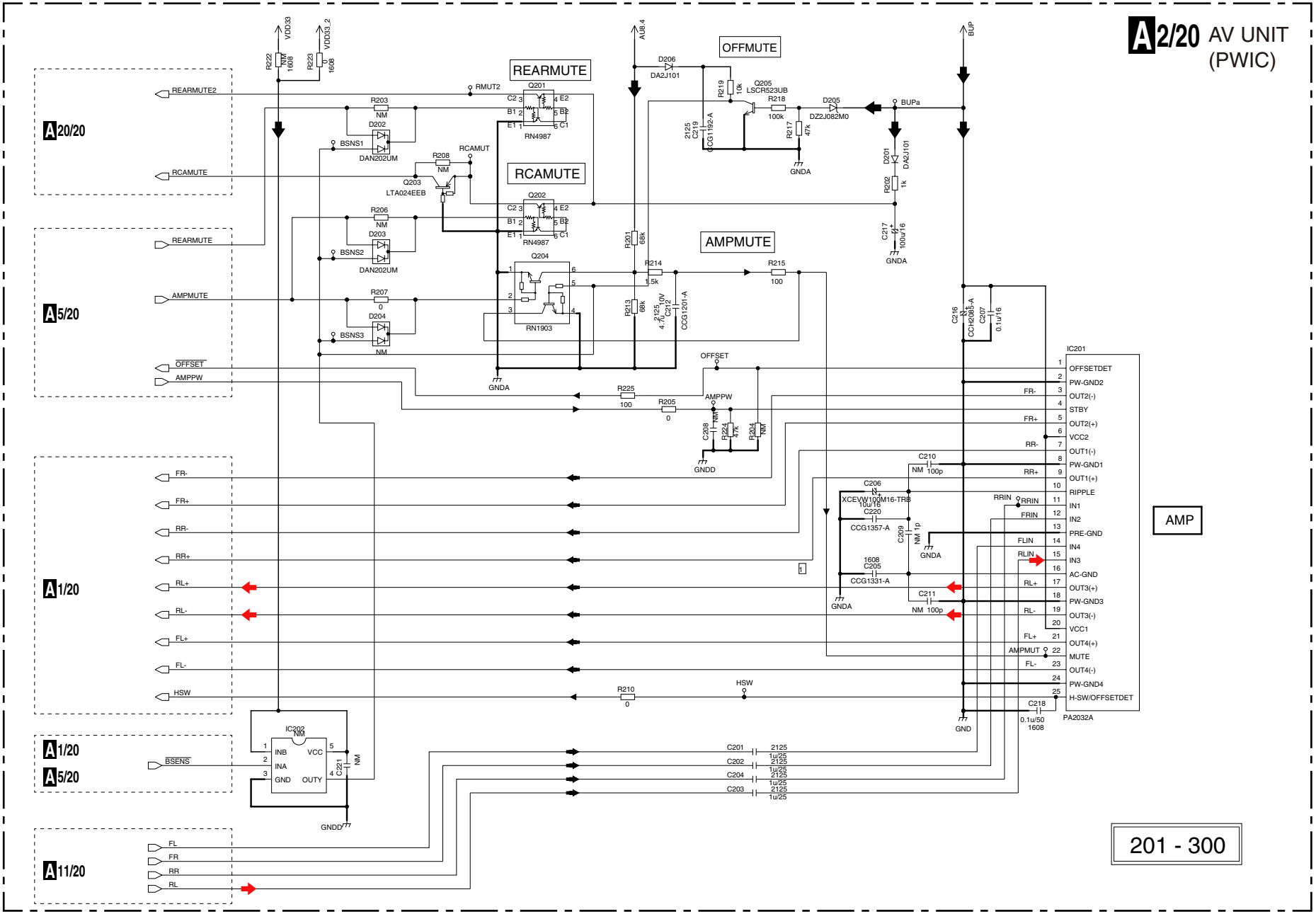
A2/20 AV UNIT (PWIC)
REARMUTE
RCAMUTE
AMPMUTE
OFFMUTE
AMP
IC201
PA2032A
IC202
RN4987
RN1903
DAN202UM
LTA024EEB
DA2J101
DZ2J082M0
LSCR523UB
XCEVW100M16-TRB
CCG1357-A
CCG1331-A
CCG1192-A
CCG1201-A
CCH2065-A
A20/20
A5/20
A1/20
A11/20
201 - 300

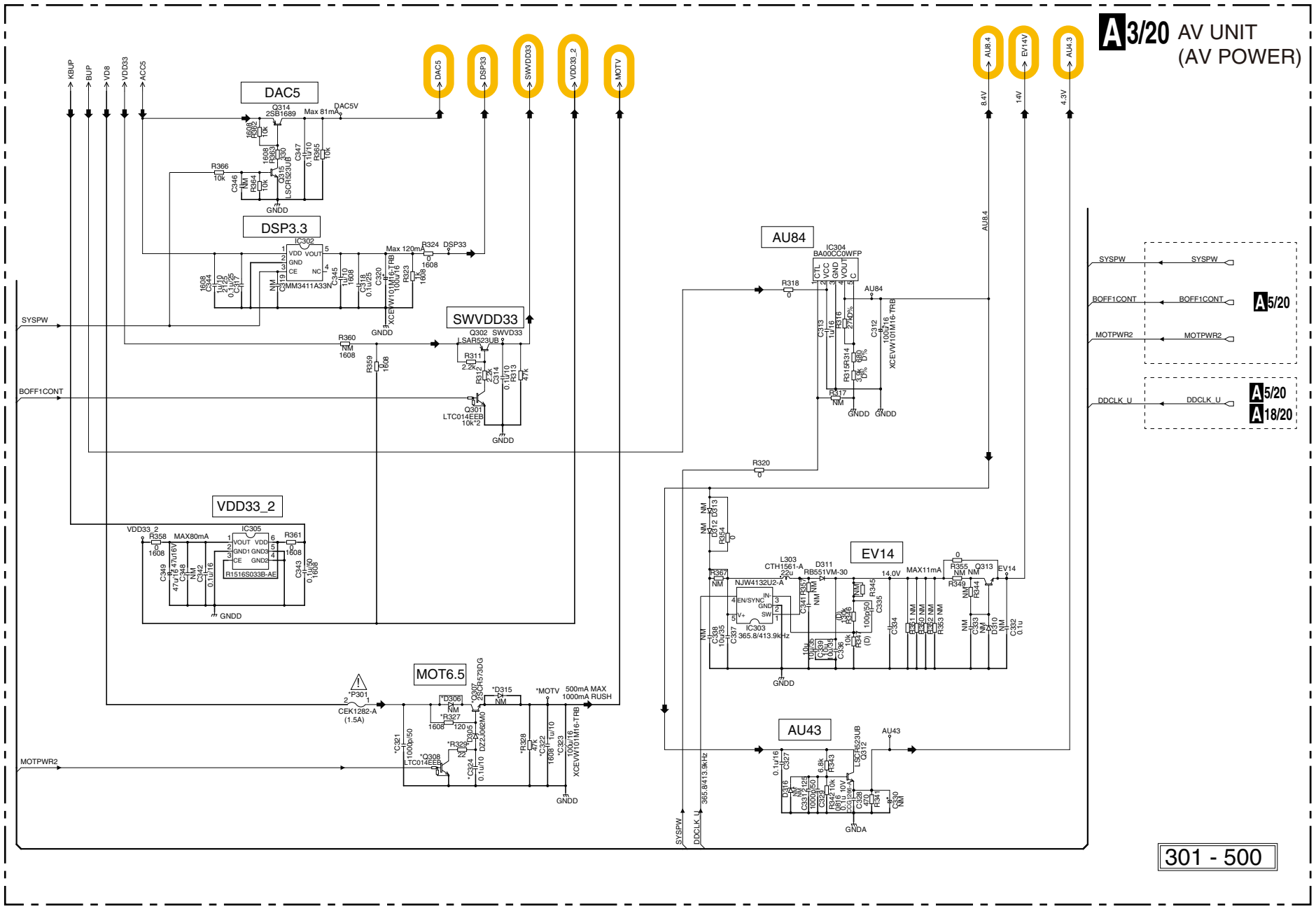
A3/20 AV UNIT (AV POWER)
DAC5
DSP3.3
SWVDD33
VDD33_2
MOT6.5
AU84
EV14
AU43
A5/20
A18/20
301 - 500

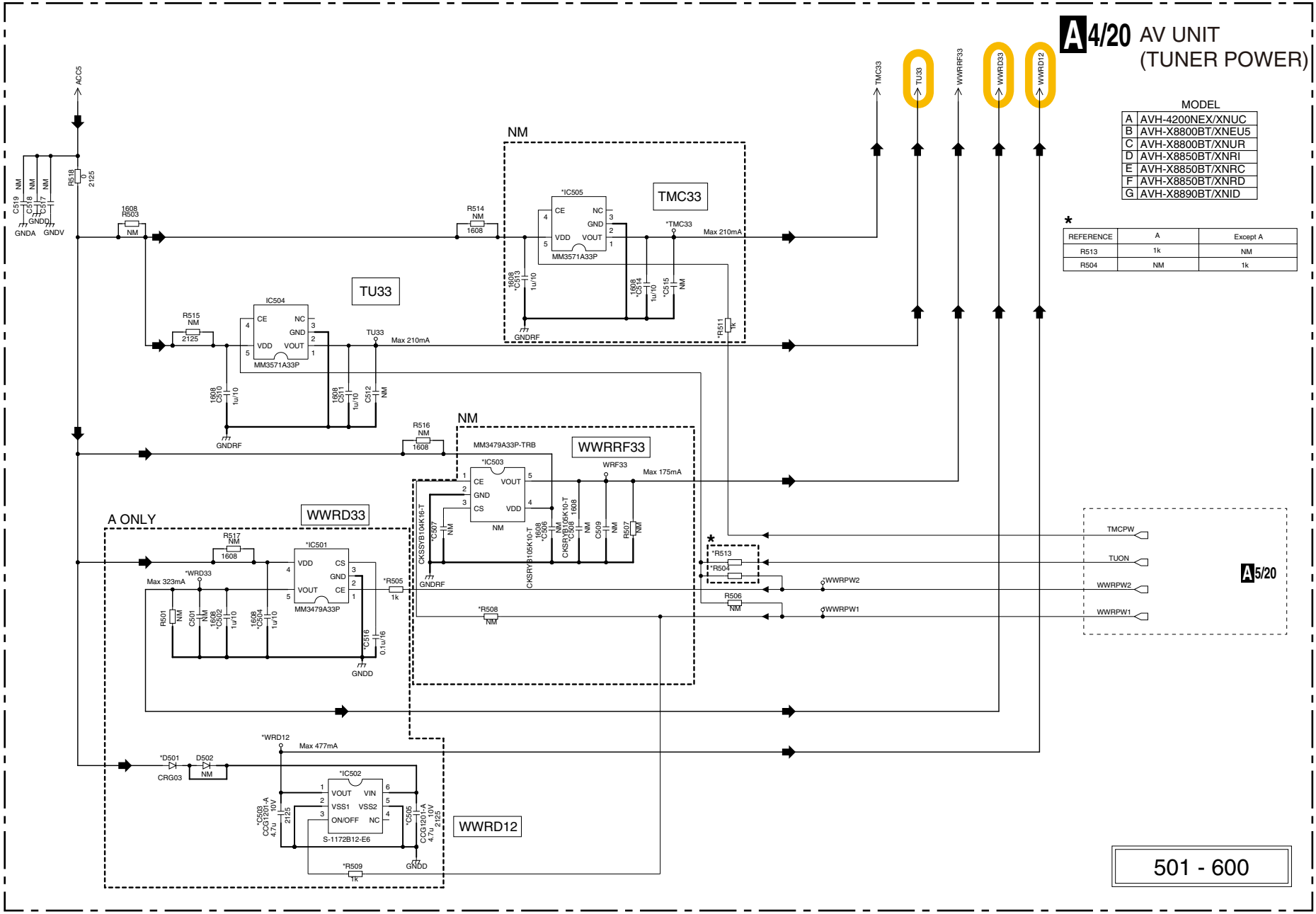
A4/20 AV UNIT (TUNER POWER)
MODEL
A AVH-4200NEX/XNUC
B AVH-X8800BT/XNEU5
C AVH-X8800BT/XNUR
D AVH-X8850BT/XNRI
E AVH-X8850BT/XNRC
F AVH-X8850BT/XNRD
G AVH-X8890BT/XNID
*
REFERENCE | A | Except A
R513 | 1k | NM
R504 | NM | 1k
TMC33
TU33
WWRRF33
WWRD33
WWRD12
A ONLY
NM
*IC505
MM3571A33P
IC504
MM3479A33P-TRB
*IC503
*IC501
MM3479A33P
*IC502
S-1172B12-E6
Max 210mA
Max 175mA
Max 323mA
Max 477mA
TMCPW
TUON
WWRPW2
WWRPW1
A5/20
501 - 600
A4/20

*1

	HD				Sxi			WREMCONT								
	R723	R724	R728	R729	R642	R746	D604	Q2301	Q2302	Q2303	Q2304	R2336	R2338	R2339	R2333	R2335
A	100k	1k	100	100	1k	0	BS2014G	NM	NM	NM	NM	NM	NM	NM	NM	NM
B	NM	NM	NM	NM	NM	NM	NM	NM	NM	NM	NM	NM	NM	NM	NM	NM
C	NM	NM	NM	NM	NM	NM	NM	NM	NM	NM	NM	NM	NM	NM	NM	NM
D	NM	NM	NM	NM	NM	NM	NM	RN4982	RN4982	RN4982	RN4982	0	BR2k	BR2k	680	680
E	NM	NM	NM	NM	NM	NM	NM	RN4982	RN4982	RN4982	RN4982	0	BR2k	BR2k	680	680
F	NM	NM	NM	NM	NM	NM	NM	RN4982	RN4982	RN4982	RN4982	0	BR2k	BR2k	680	680
G	NM	NM	NM	NM	NM	NM	NM	RN4982	RN4982	RN4982	RN4982	0	BR2k	BR2k	680	680

A5/20 AV UNIT (SYSTEM UCOM)

MODEL

A	AVH-4200NEX/XNUC
B	AVH-X8800BT/XNEU5
C	AVH-X8800BT/XNUR
D	AVH-X8850BT/XNRI
E	AVH-X8850BT/XNRC
F	AVH-X8850BT/XNRD
G	AVH-X8890BT/XNID

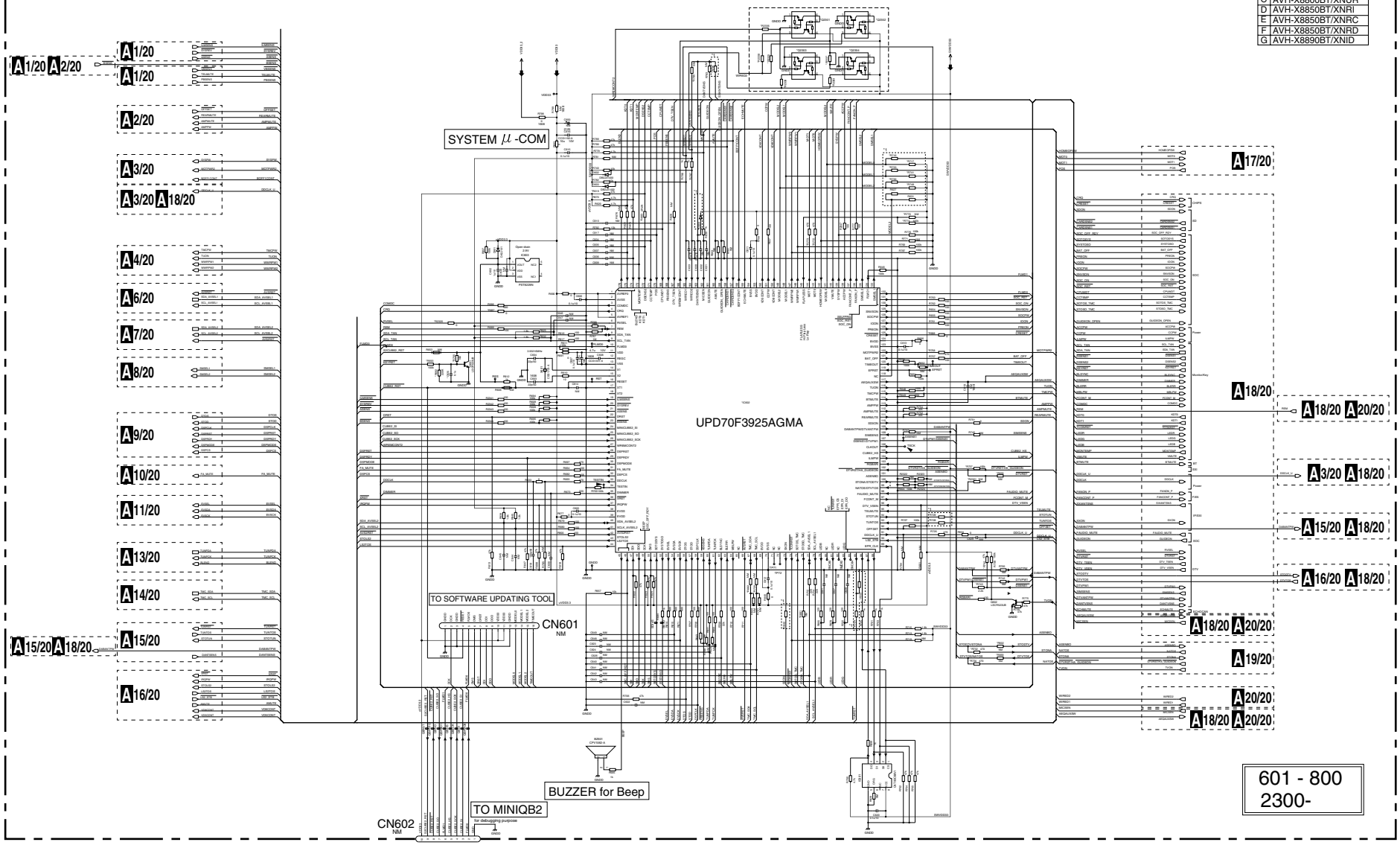

AVH-4200NEX/XNUC

10.6 AV UNIT(S AVSEL)

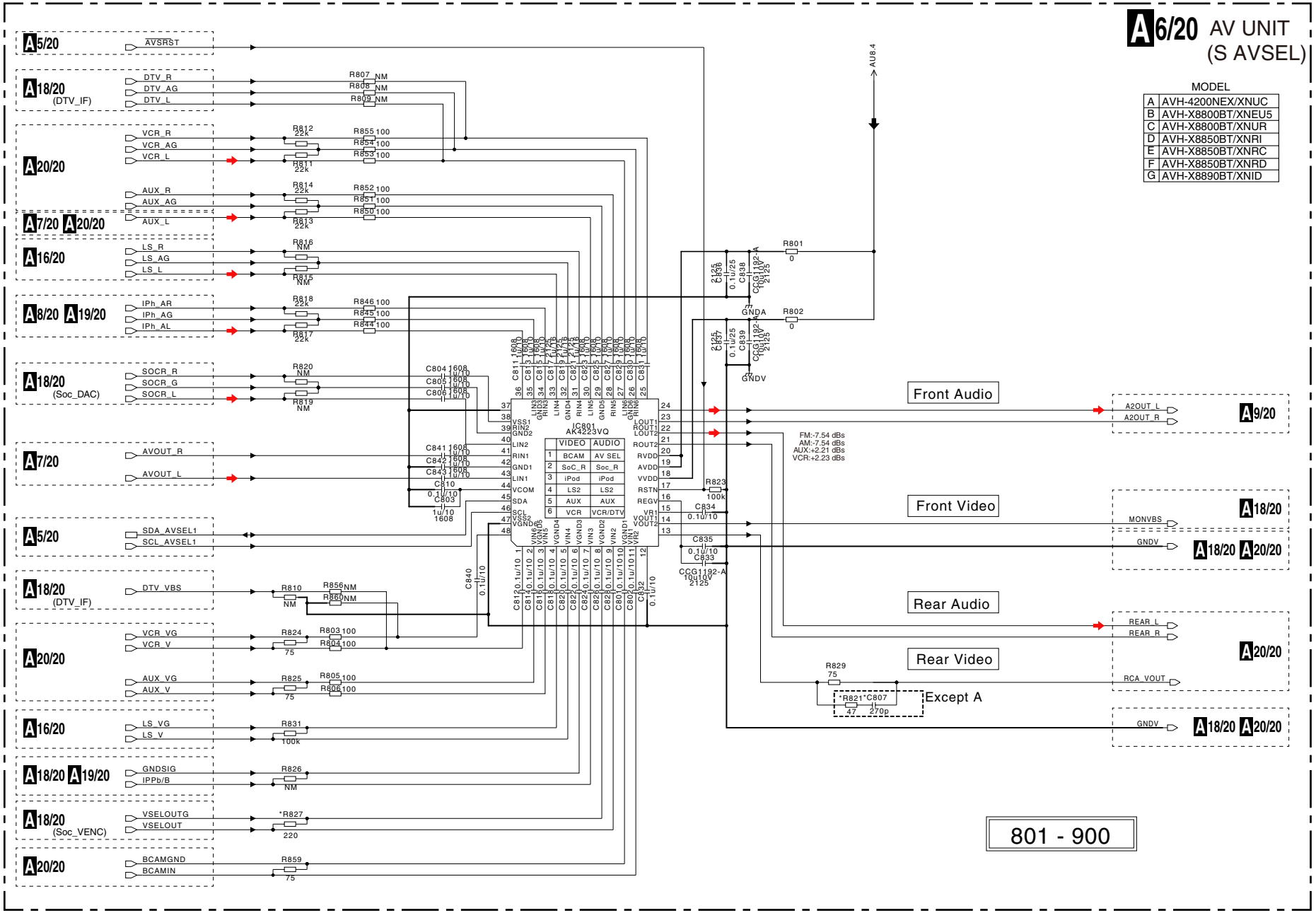

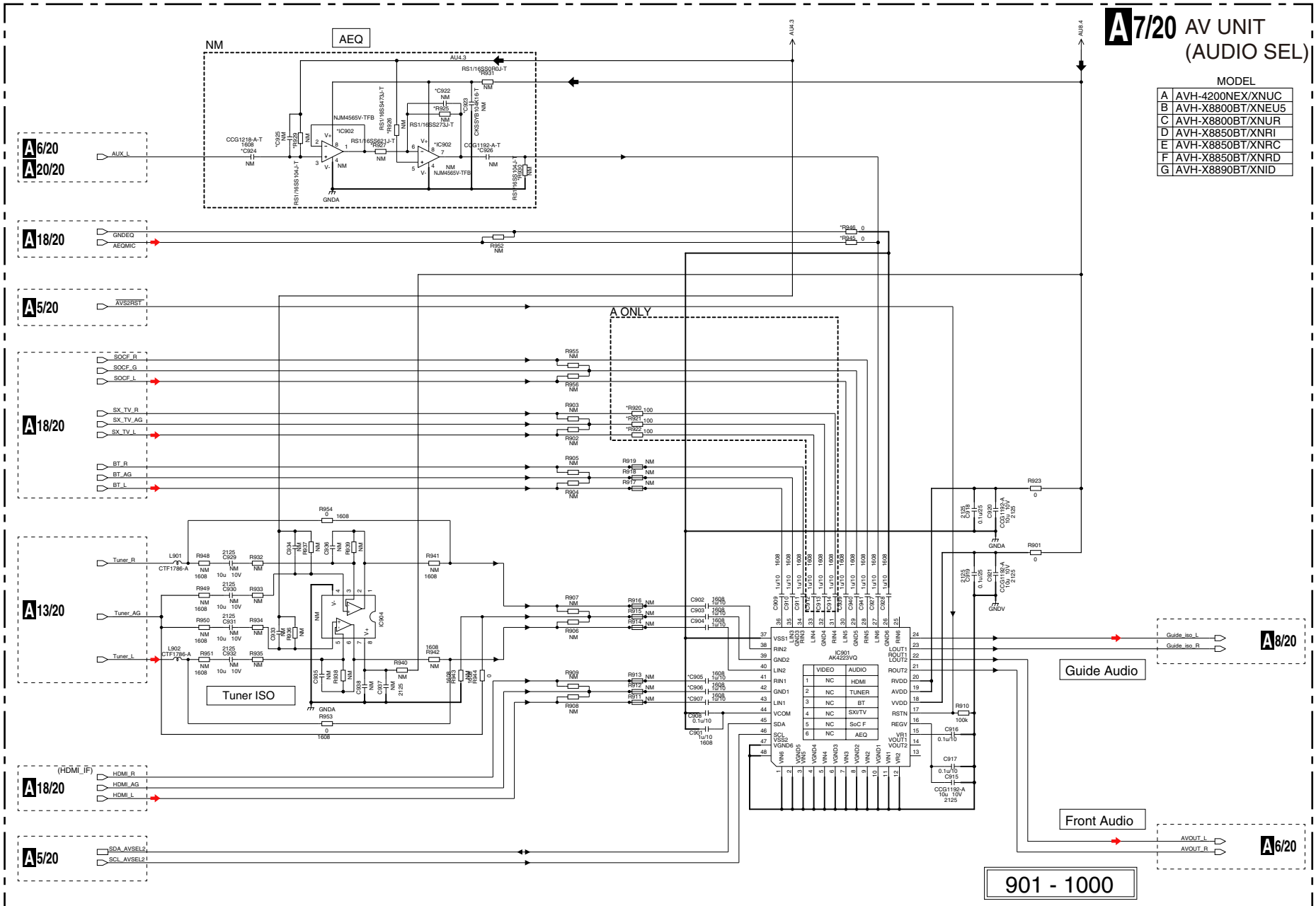
A7/20 AV UNIT (AUDIO SEL)
MODEL
A AVH-4200NEX/XNUC
B AVH-X8800BT/XNEU5
C AVH-X8800BT/XNUR
D AVH-X8850BT/XNRI
E AVH-X8850BT/XNRC
F AVH-X8850BT/XNRD
G AVH-X8890BT/XNID
AEQ
NM
A6/20
A20/20
AUX_L
A18/20
GNDEQ
AEQMIC
A5/20
AVS2RST
A ONLY
SOCF_R
SOCF_G
SOCF_L
SX_TV_R
SX_TV_AG
SX_TV_L
BT_R
BT_AG
BT_L
A13/20
Tuner_R
Tuner_AG
Tuner_L
Tuner ISO
(HDMI_IF)
HDMI_R
HDMI_AG
HDMI_L
SDA_AVSEL2
SCL_AVSEL2
IC901 AK4223VQ
Guide Audio
Front Audio
A8/20
Guide_iso_L
Guide_iso_R
AVOUT_L
AVOUT_R
901 - 1000

10.8 AV UNIT(GUIDE AUDIO SEL)

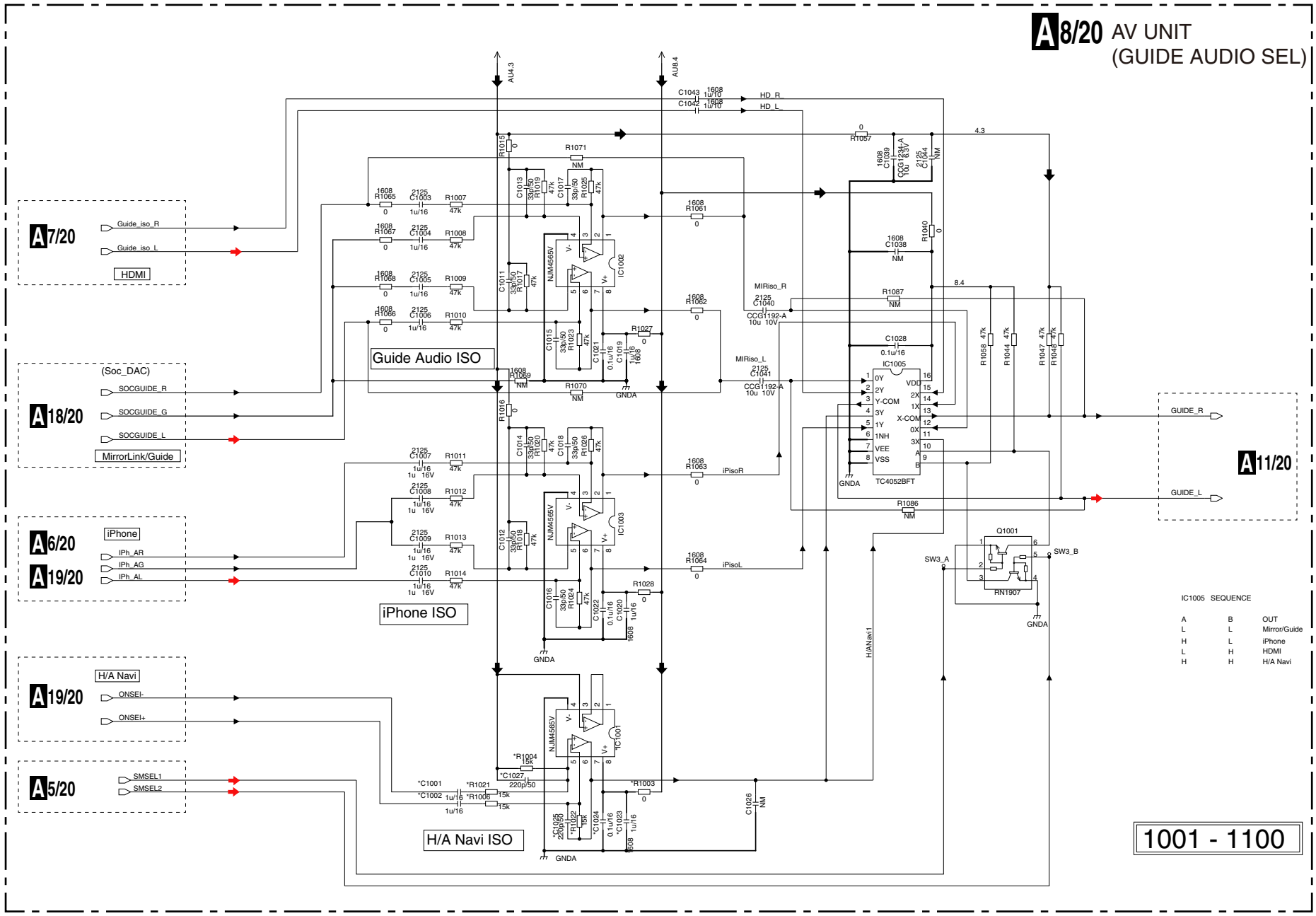

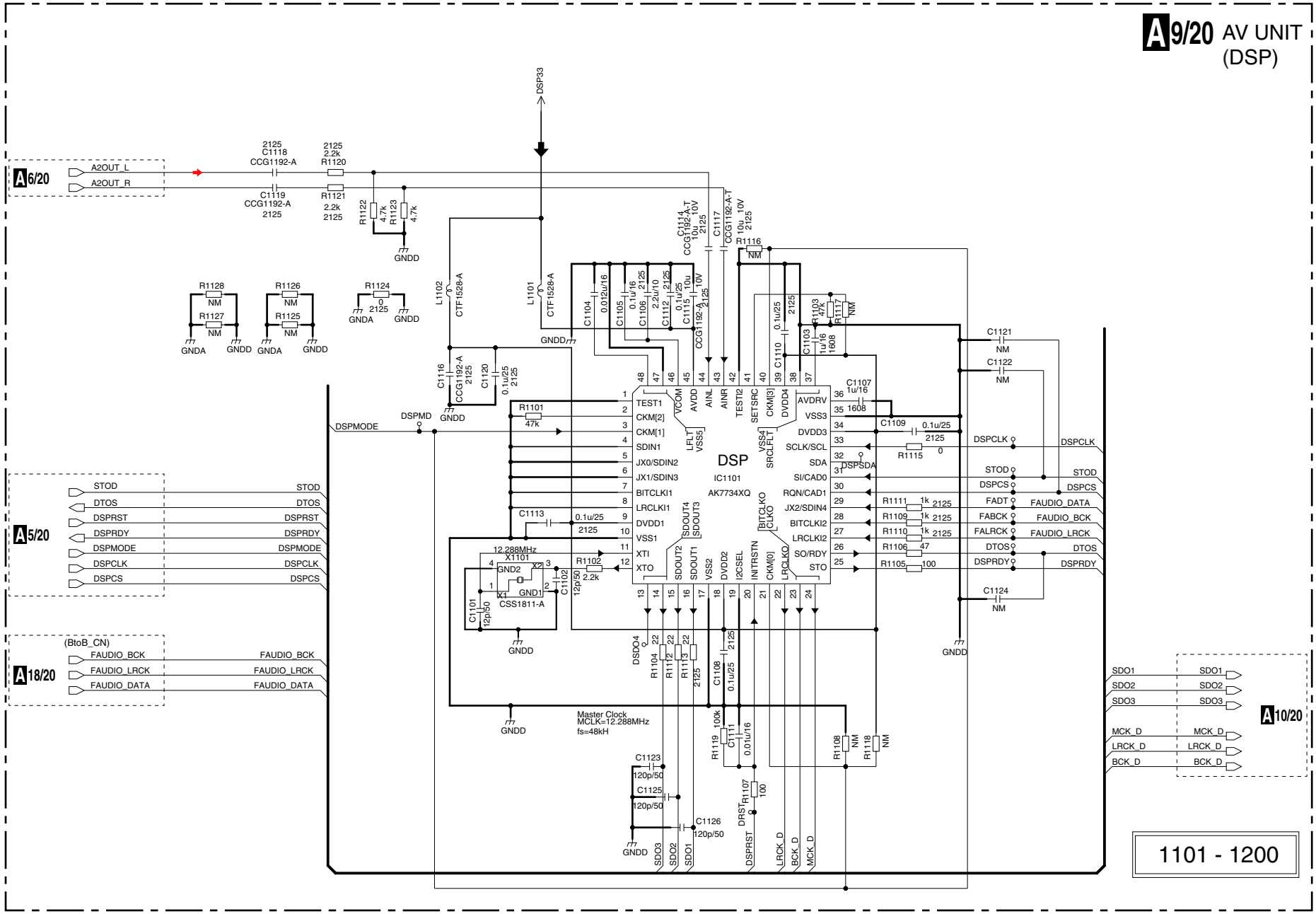
A9/20 AV UNIT (DSP)
A6/20
A2OUT_L
A2OUT_R
A5/20
STOD
DTOS
DSPRST
DSPRDY
DSPMODE
DSPCLK
DSPCS
A18/20
(BtoB_CN)
FAUDIO_BCK
FAUDIO_LRCK
FAUDIO_DATA
A10/20
SDO1
SDO2
SDO3
MCK_D
LRCK_D
BCK_D
DSP33
DSP
IC1101
AK7734XQ
TEST1
CKM[2]
CKM[1]
SDIN1
JX0/SDIN2
JX1/SDIN3
BITCLKI1
LRCLKI1
DVDD1
VSS1
XTI
XTO
VCOM
AVDD
AINL
AINR
TESTI2
SETSRC
CKM[3]
DVDD4
AVDRV
VSS3
DVDD3
SCLK/SCL
SDA
SI/CAD0
RQN/CAD1
JX2/SDIN4
BITCLKI2
LRCLKI2
SO/RDY
STO
LFLT
VSS5
VSS4
SRCLFLT
SDOUT4
SDOUT3
SDOUT2
SDOUT1
VSS2
DVDD2
I2CSEL
INITRSTN
CKM[0]
LRCLKO
BITCLKO
CLKO
12.288MHz
X1101
CSS1811-A
Master Clock
MCLK=12.288MHz
fs=48kH
DSPMODE
DSPMD
DSPCLK
STOD
DSPCS
FADT
FABCK
FALRCK
DTOS
DSPRDY
FAUDIO_DATA
FAUDIO_BCK
FAUDIO_LRCK
DSPSDA
DSDO4
DRST
GNDD
GNDA
1101 - 1200

10.10 AV UNIT(DAC LPF)

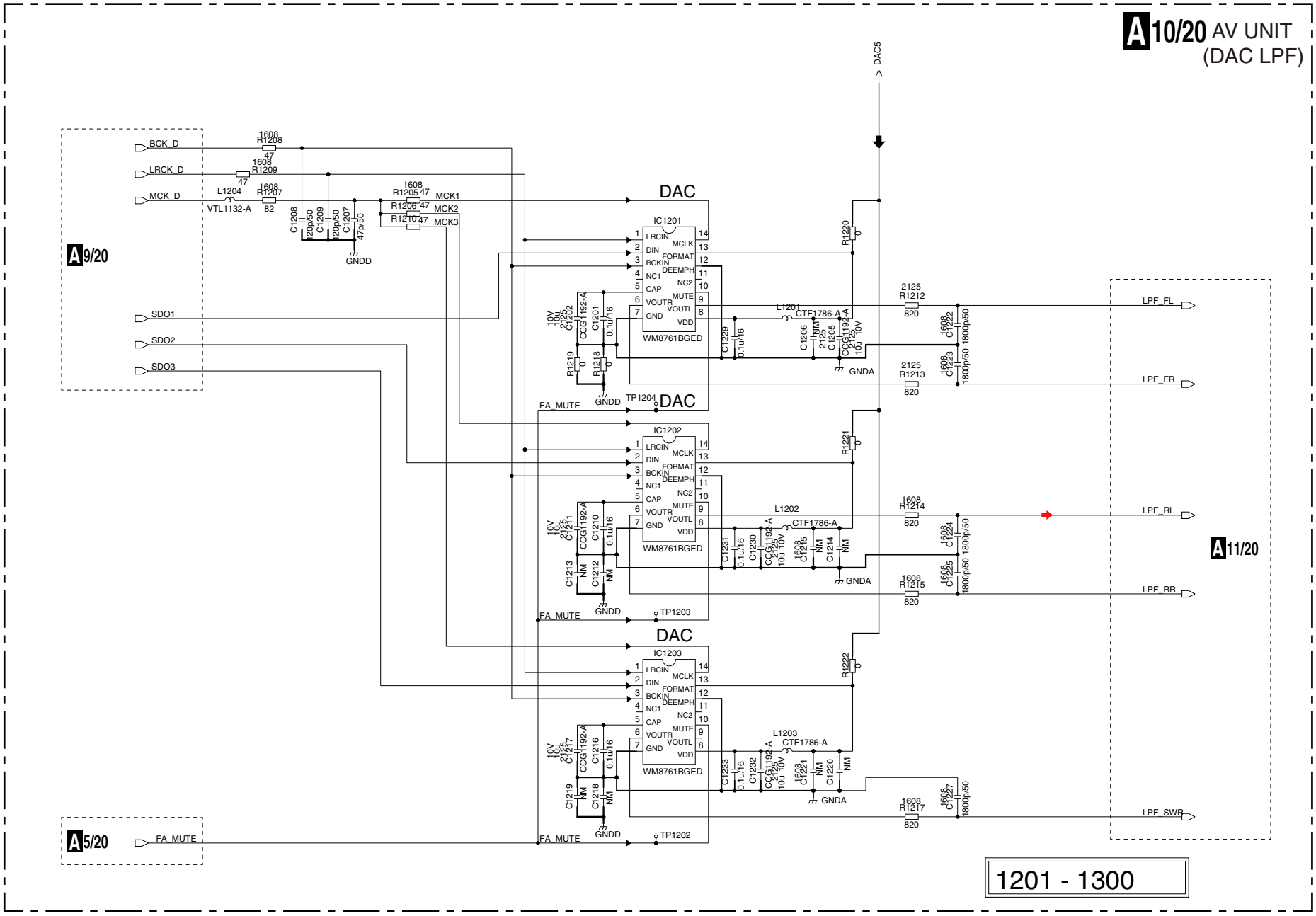

10.11 AV UNIT(S EVOL)

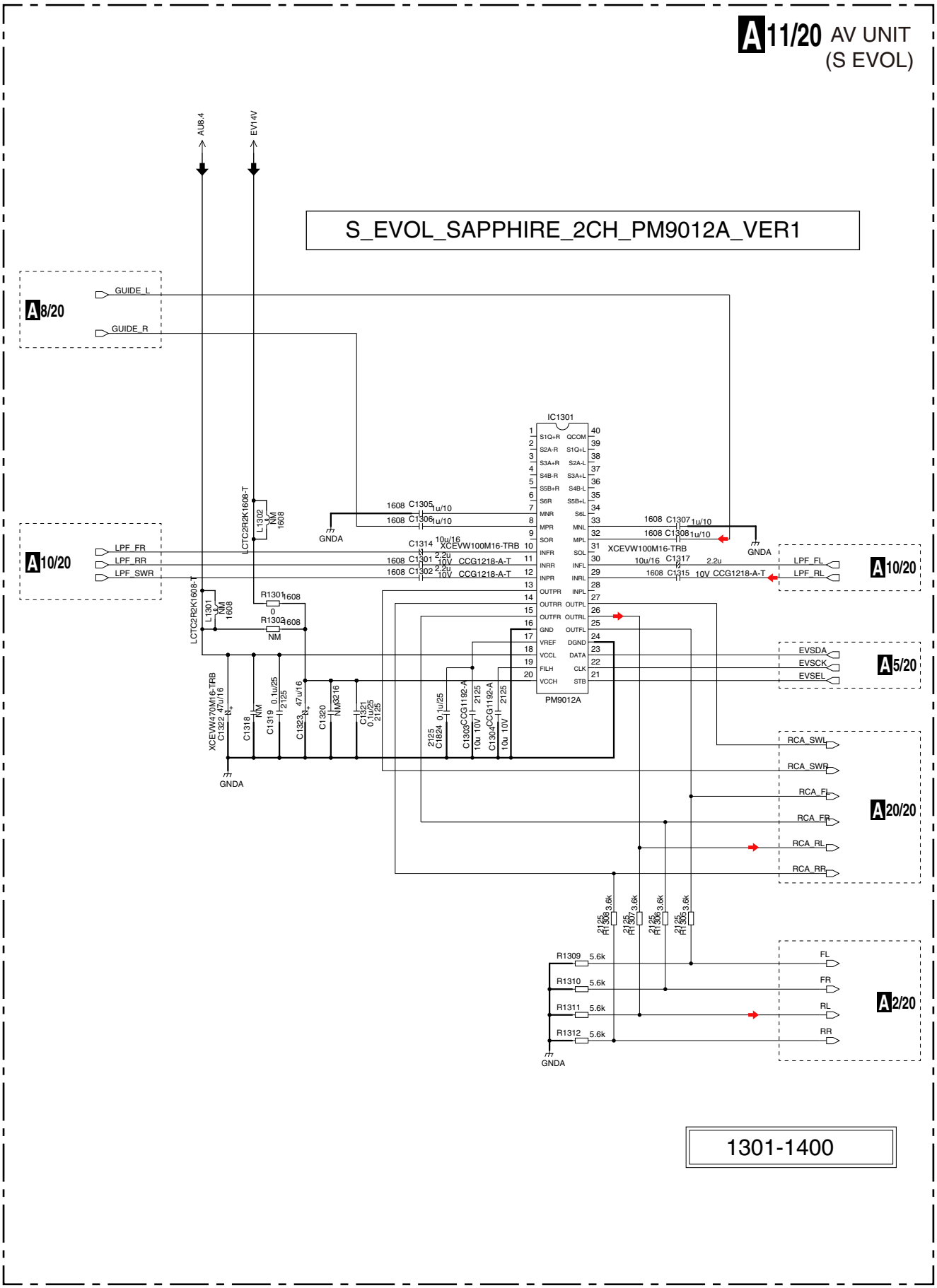

10.12 AV UNIT(DISTRIBUTION)

A 12/20 AV UNIT (DISTRIBUTION)

MODEL	
A	AVH-4200NEX/XNUC
B	AVH-X8800BT/XNEU5
C	AVH-X8800BT/XNUR
D	AVH-X8850BT/XNRI
E	AVH-X8850BT/XNRC
F	AVH-X8850BT/XNRD
G	AVH-X8890BT/XNID

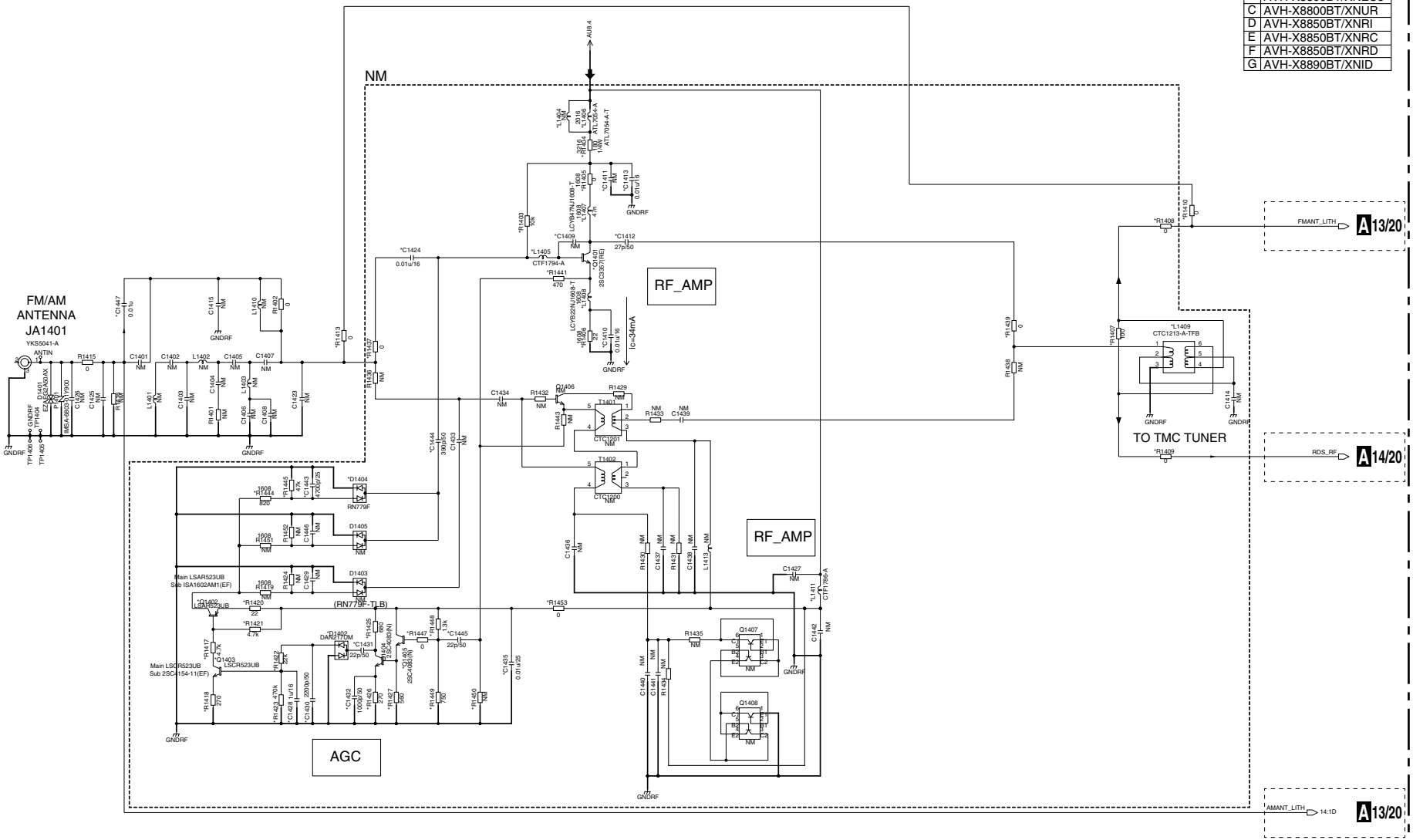

MODEL

A	AVH-4200NEX/XNUC
B	AVH-X8800BT/XNEU5
C	AVH-X8800BT/XNUR
D	AVH-X8850BT/XNRI
E	AVH-X8850BT/XNRC
F	AVH-X8850BT/XNRD
G	AVH-X8890BT/XNID

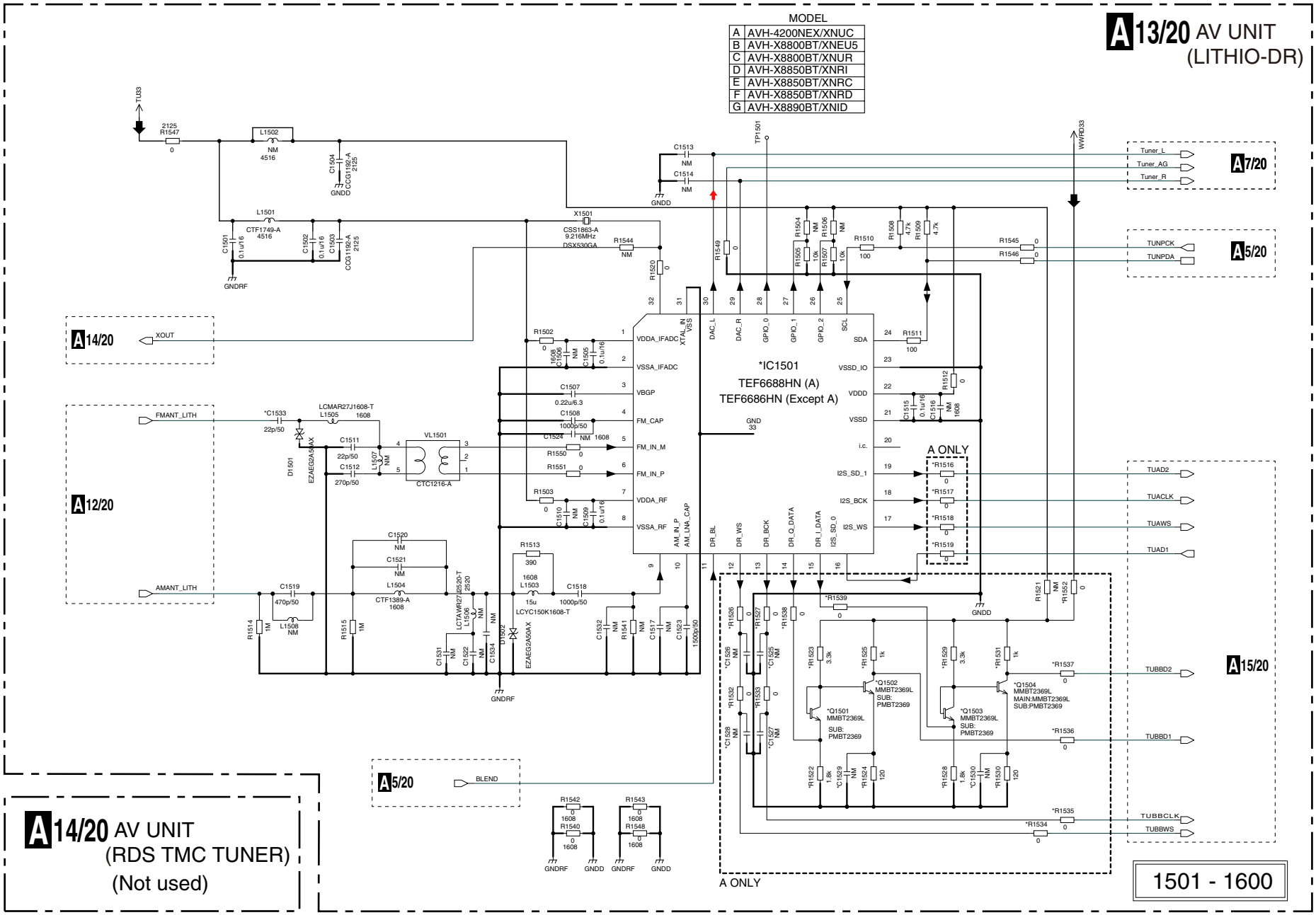

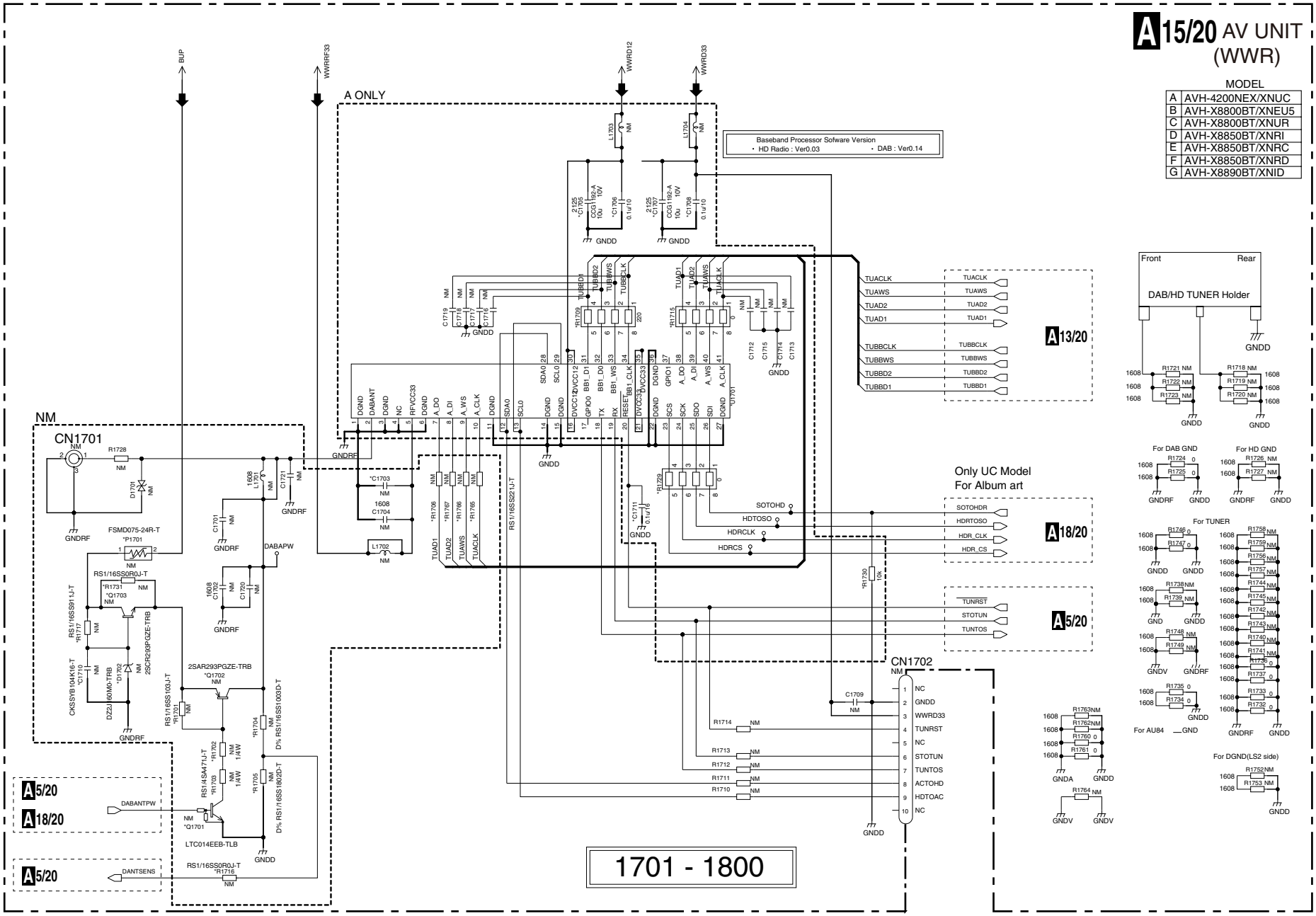
A15/20 AV UNIT (WWR)
MODEL
A AVH-4200NEX/XNUC
B AVH-X8800BT/XNEU5
C AVH-X8800BT/XNUR
D AVH-X8850BT/XNRI
E AVH-X8850BT/XNRC
F AVH-X8850BT/XNRD
G AVH-X8890BT/XNID
A ONLY
Baseband Processor Sofware Version
• HD Radio : Ver0.03
• DAB : Ver0.14
BUP
WWRF33
WWRD12
WWRD33
NM
CN1701
CN1702
A13/20
A18/20
A5/20
A15/20
Front
Rear
DAB/HD TUNER Holder
Only UC Model
For Album art
For DAB GND
For HD GND
For TUNER
For AU84
For DGND(LS2 side)
1701 - 1800

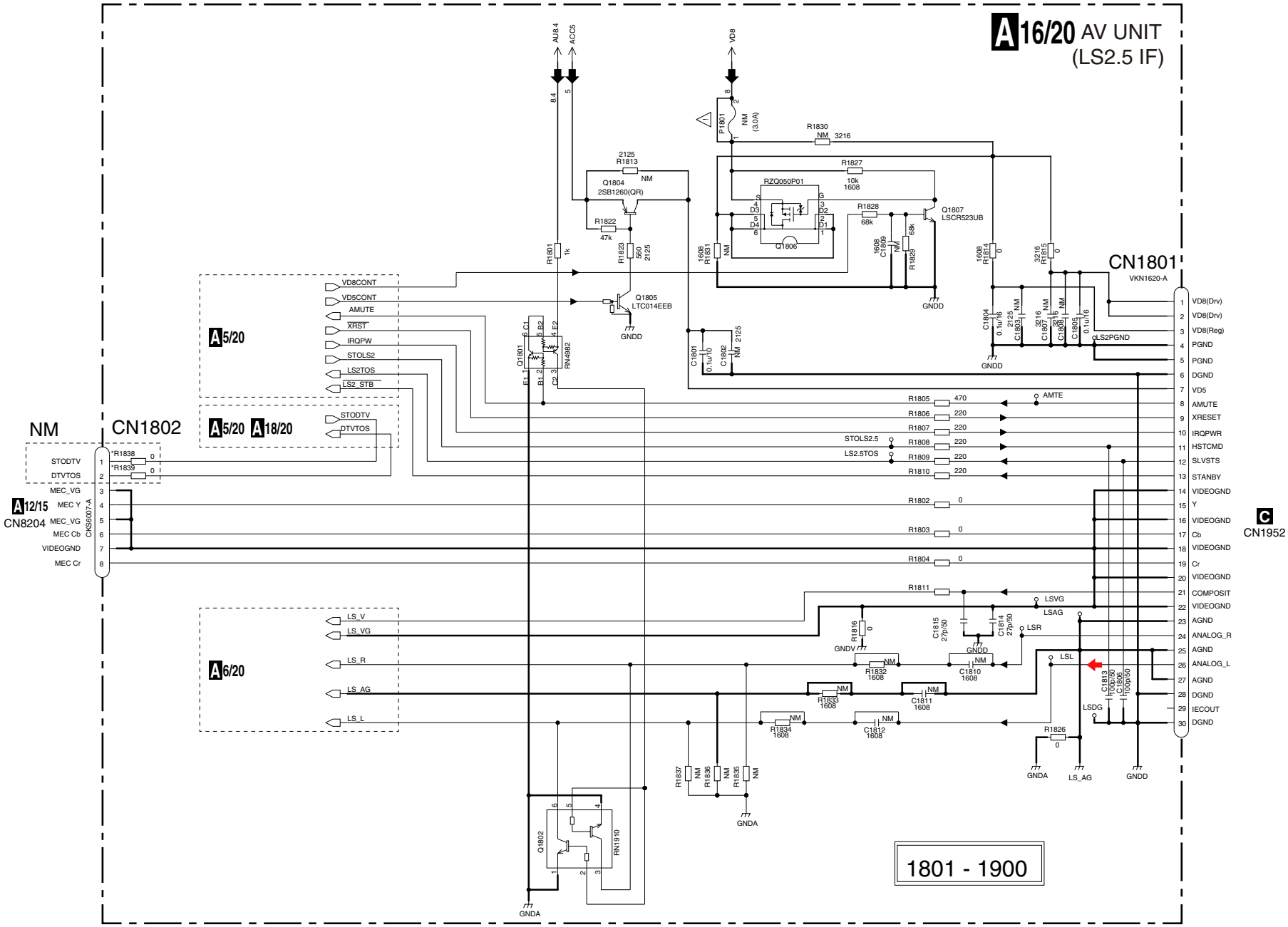
A16/20 AV UNIT
(LS2.5 IF)
CN1801
VKN1620-A
CN1802
CN8204
CN1952
A5/20
A18/20
A12/15
A6/20
Q1804
2SB1260(QR)
Q1805
LTC014EEB
Q1806
RZQ050P01
Q1807
LSCR523UB
Q1801
RN4982
Q1802
RN1910
P1801
NM
(3.0A)
AU8.4
ACC5
VD8
GNDD
GNDA
GNDV
LS2PGND
AMTE
LSVG
LSAG
LSR
LSL
LSDG
LS_AG
STOLS2
LS2.5TOS
VD8CONT
VD5CONT
AMUTE
XRST
IRQPW
STOLS2
LS2TOS
LS2_STB
STODTV
DTVTOS
MEC_VG
MEC Y
MEC_VG
MEC Cb
VIDEOGND
MEC Cr
LS_V
LS_VG
LS_R
LS_AG
LS_L
VD8(Drv)
VD8(Drv)
VD8(Reg)
PGND
PGND
DGND
VD5
AMUTE
XRESET
IRQPWR
HSTCMD
SLVSTS
STANBY
VIDEOGND
Y
VIDEOGND
Cb
VIDEOGND
Cr
VIDEOGND
COMPOSIT
VIDEOGND
AGND
ANALOG_R
AGND
ANALOG_L
AGND
DGND
IECOUT
DGND
1801 - 1900

10.16 AV UNIT(FLAP MECHA)

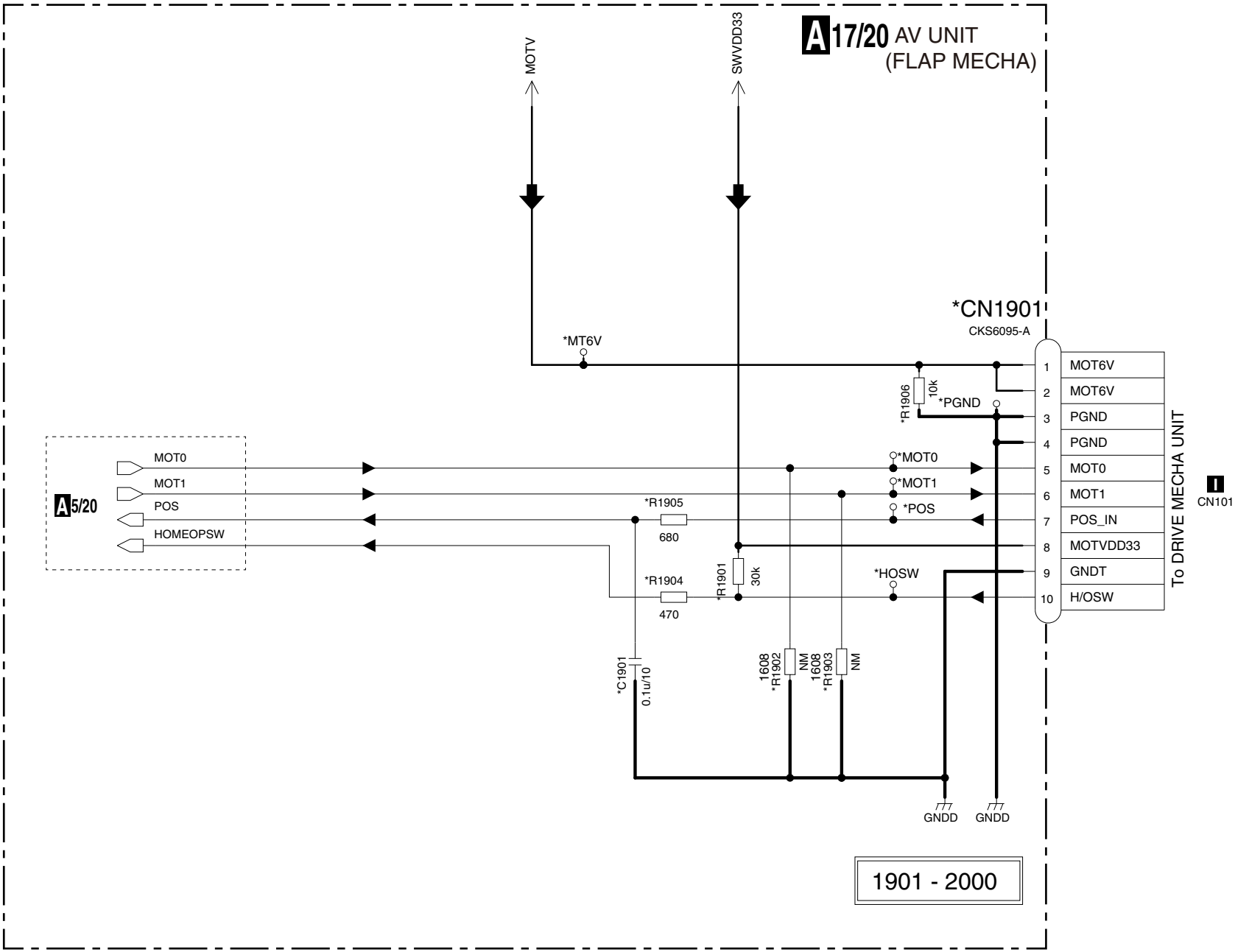

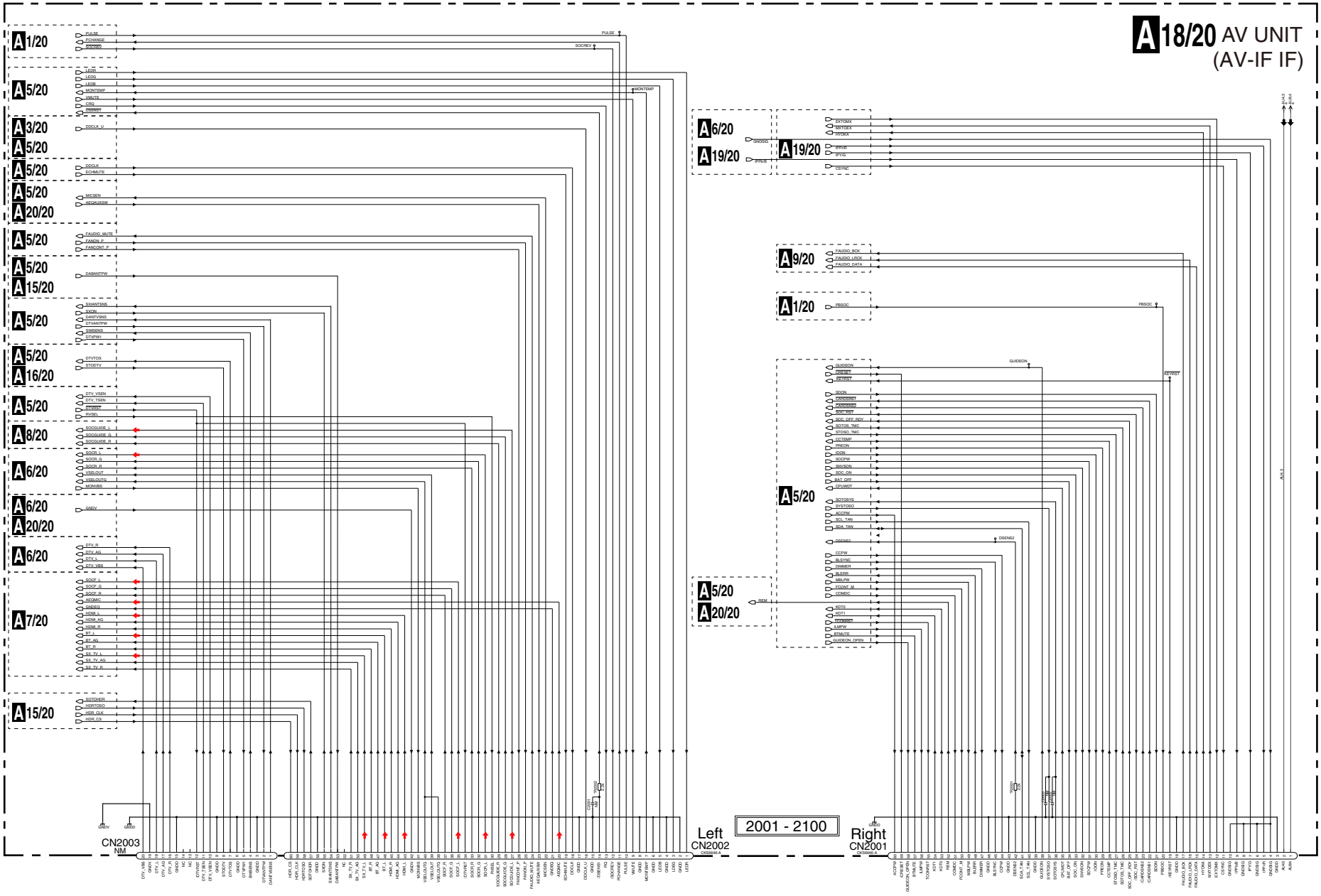
A18/20 AV UNIT
(AV-IF IF)
A1/20
A5/20
A3/20
A5/20
A5/20
A5/20
A20/20
A5/20
A5/20
A15/20
A5/20
A5/20
A16/20
A5/20
A8/20
A6/20
A6/20
A20/20
A6/20
A7/20
A15/20
A6/20
A19/20
A19/20
A9/20
A1/20
A5/20
A5/20
A20/20
CN2003
NM
Left
CN2002
2001 - 2100
Right
CN2001
B12/15
CN8201
B12/15
CN8203

10.18 AV UNIT(iPod RGB)

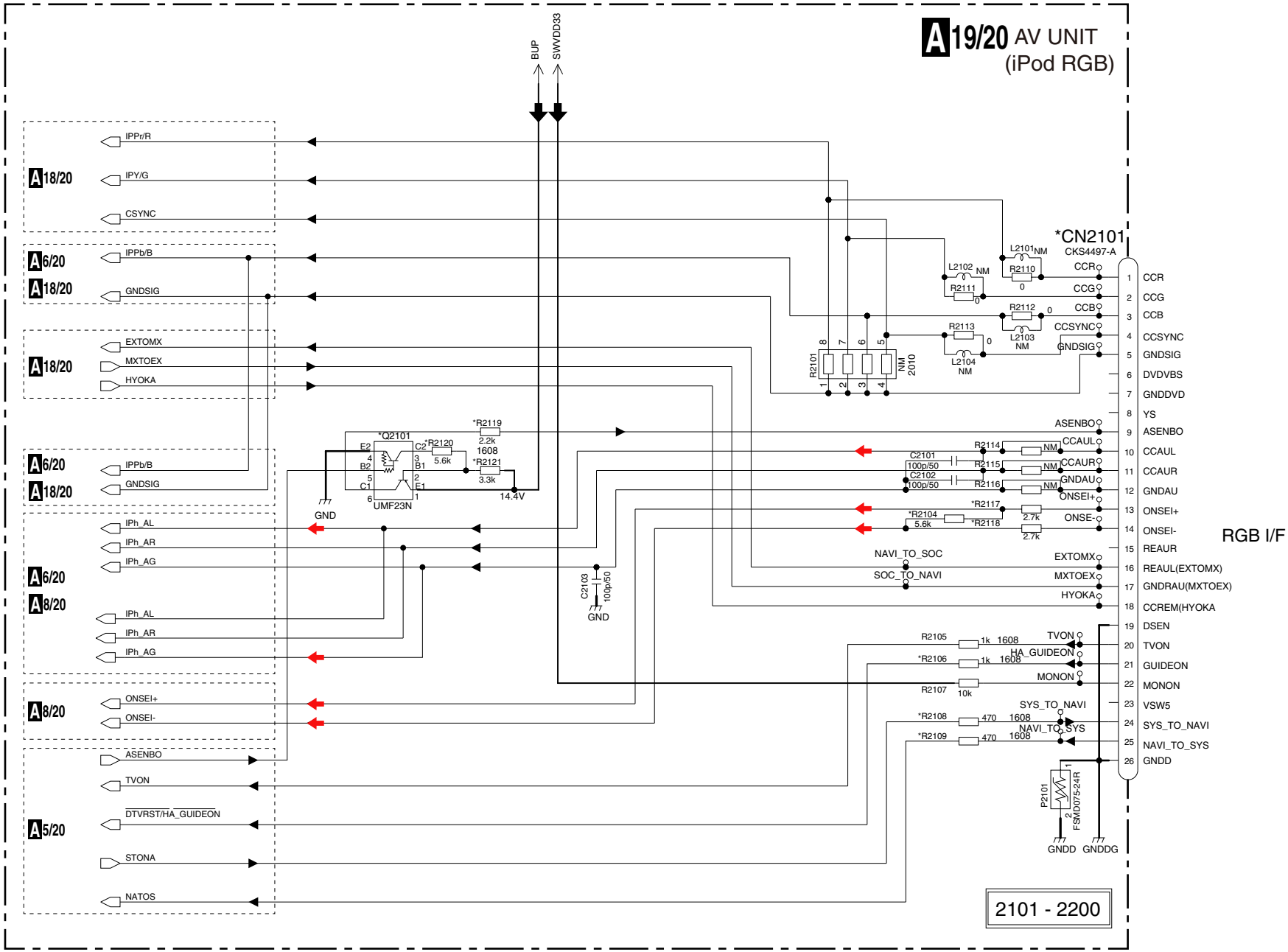

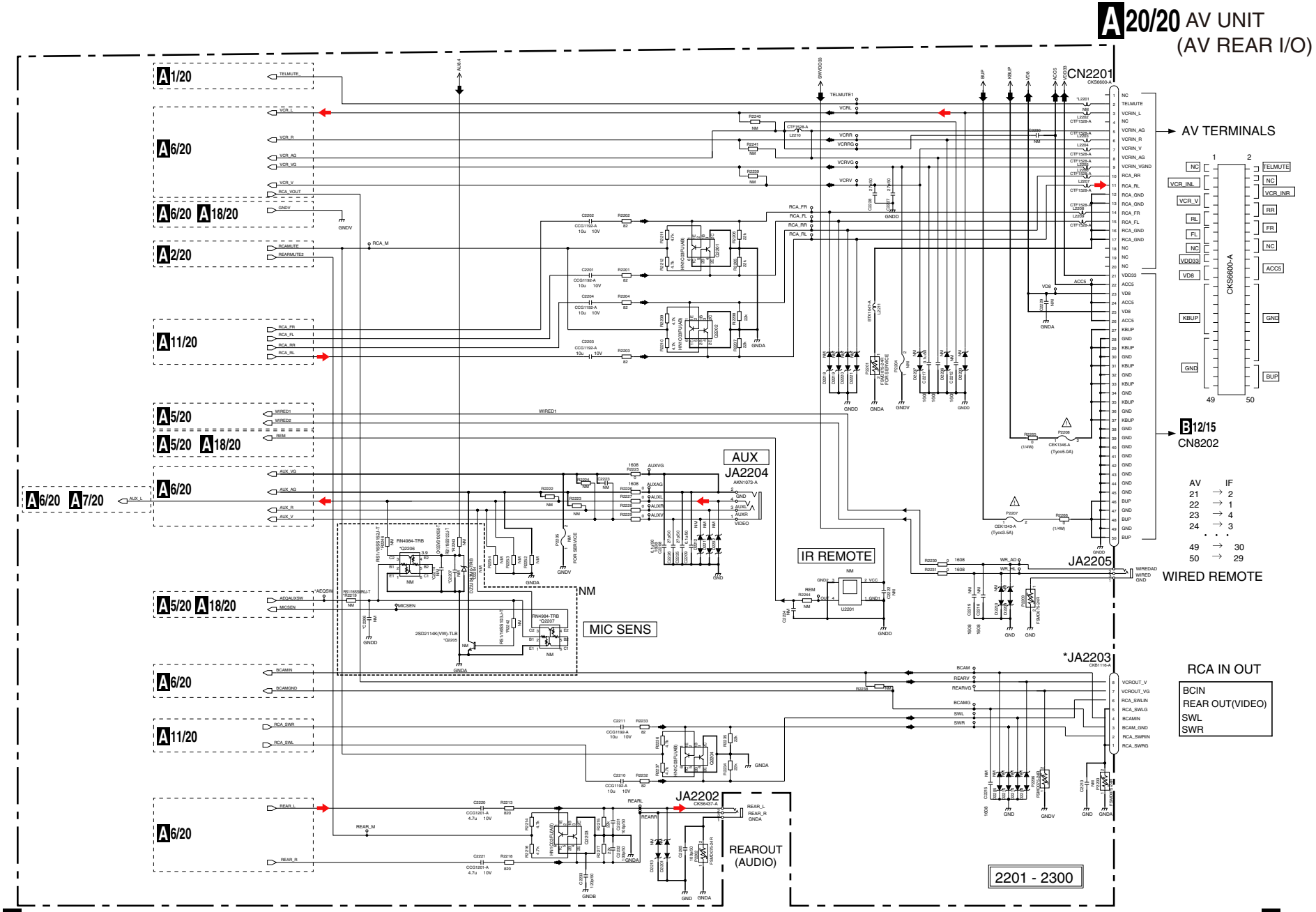
A20/20 AV UNIT
(AV REAR I/O)
CN2201
CKS6600-A
AV TERMINALS
B12/15
CN8202
AV IF
21 → 2
22 → 1
23 → 4
24 → 3
49 → 30
50 → 29
WIRED REMOTE
JA2205
AUX
JA2204
IR REMOTE
MIC SENS
NM
*JA2203
RCA IN OUT
BCIN
REAR OUT(VIDEO)
SWL
SWR
JA2202
REAROUT
(AUDIO)
2201 - 2300
A1/20
A6/20
A6/20 A18/20
A2/20
A11/20
A5/20
A5/20 A18/20
A6/20 A7/20
A6/20
A5/20 A18/20
A6/20
A11/20
A6/20

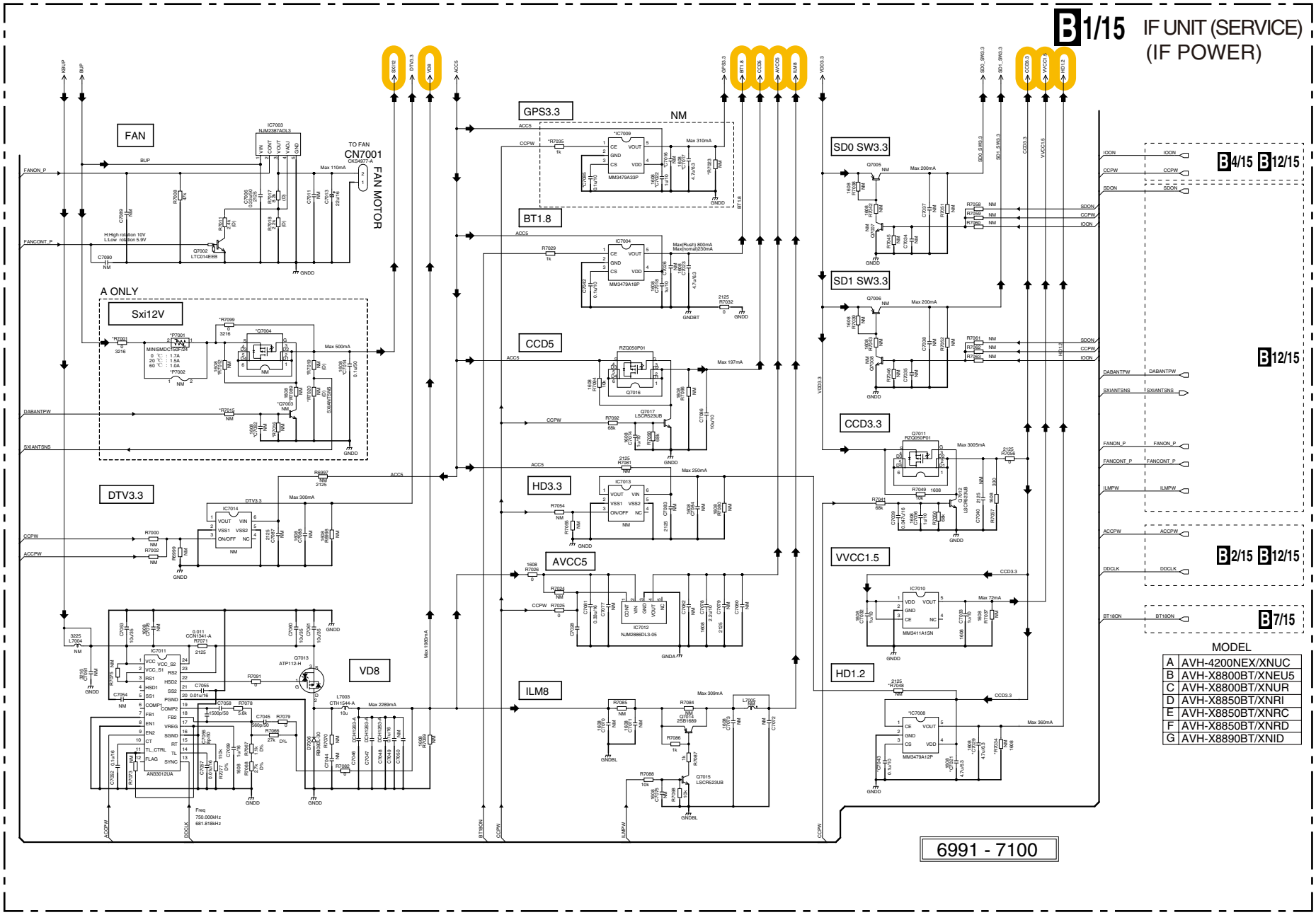

MODEL

A	AVH-4200NEX/XNUC
B	AVH-X8800BT/XNEU5
C	AVH-X8800BT/XNUR
D	AVH-X8850BT/XNRI
E	AVH-X8850BT/XNRC
F	AVH-X8850BT/XNRD
G	AVH-X8890BT/XNID

Parts Num	Voltage	Capacity	Size
CCG1201-A	10V	4.7uF	2125
CCG1236-A	35V	10uF	3216
CCG1229-A	10V	47uF	3225

B 2/15 IF UNIT (SERVICE) (2CHDDCON)

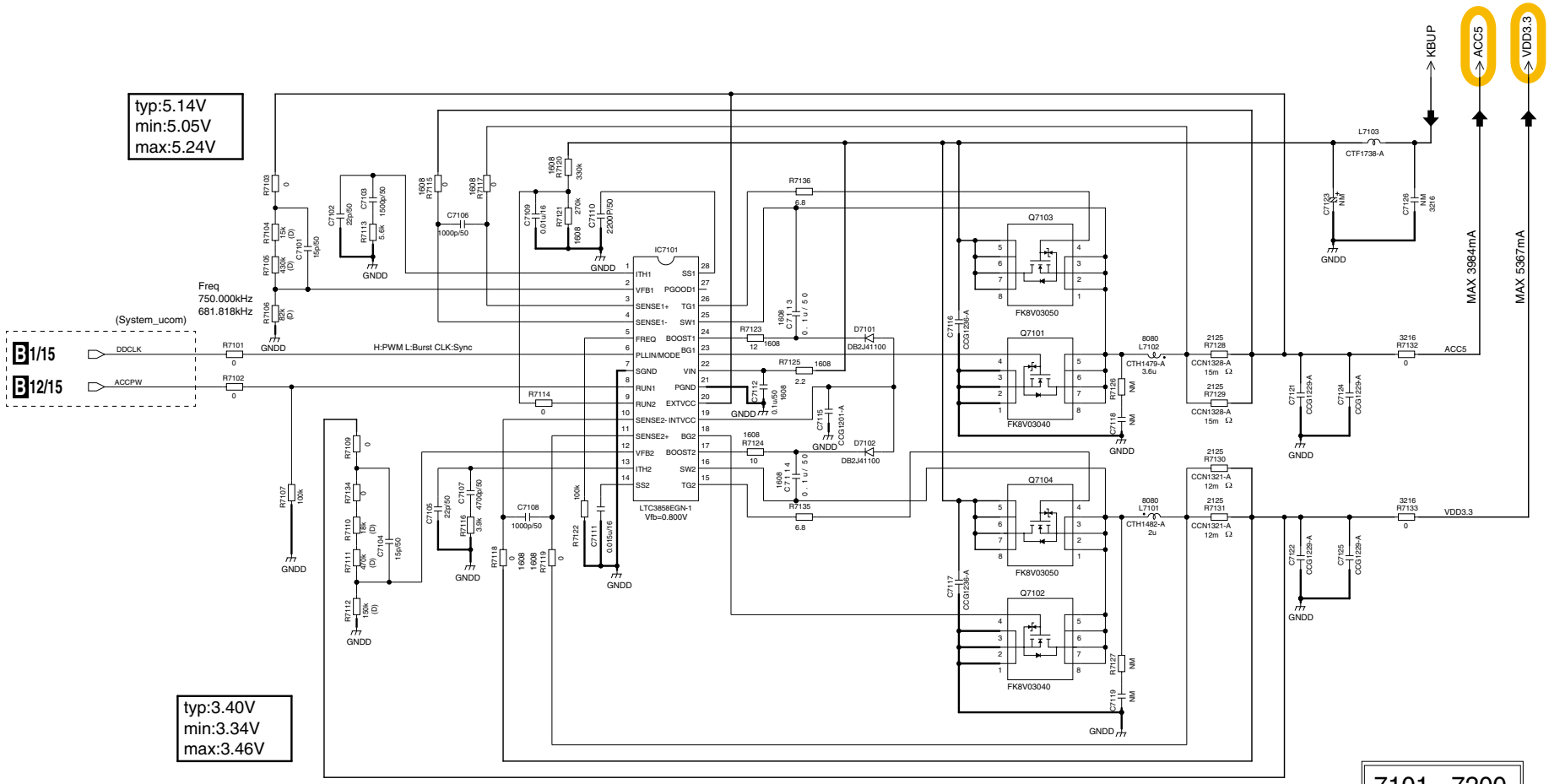

10.22 IF UNIT (SERVICE) (USB POWER)

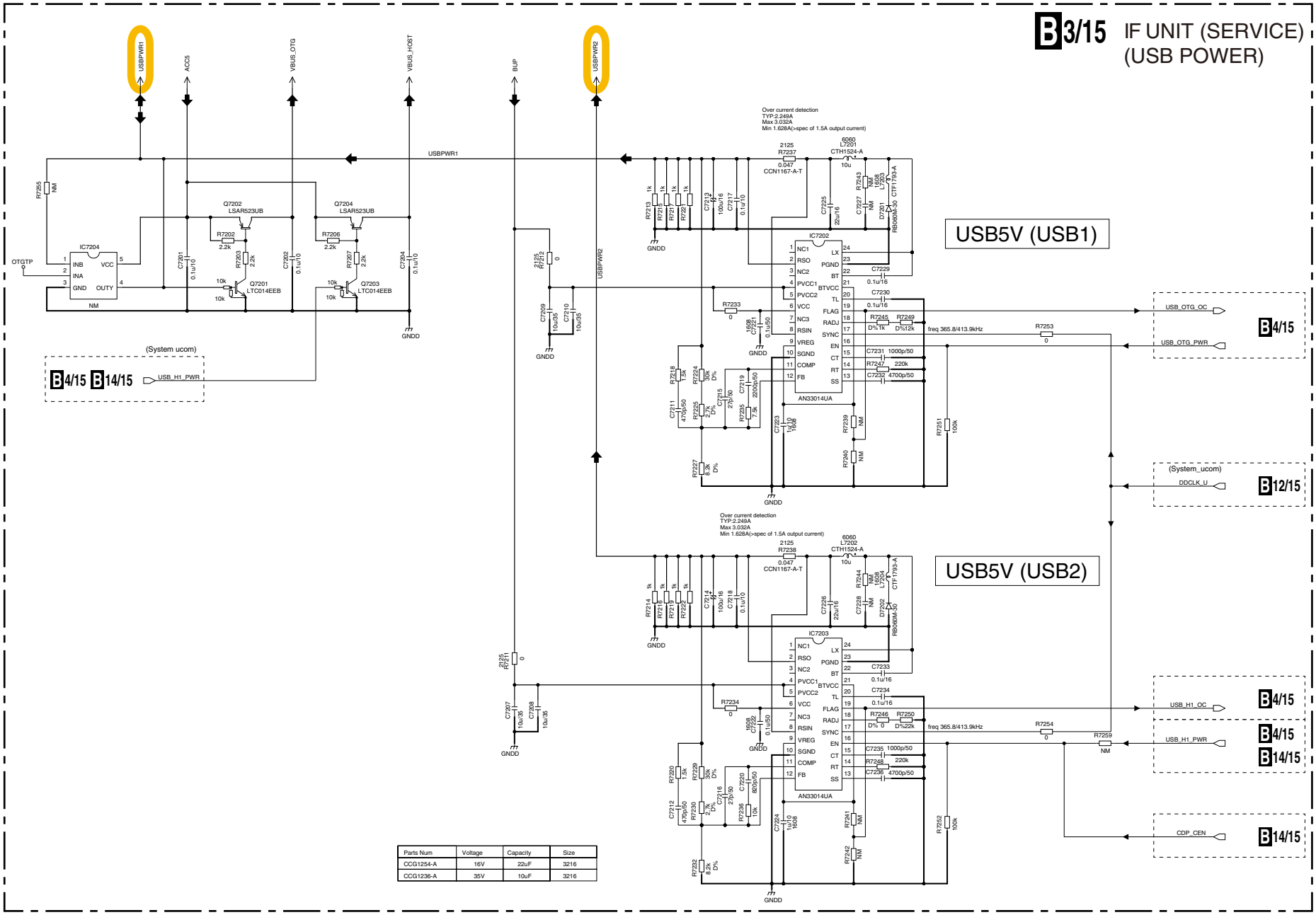

Parts Num	Voltage	Capacity	Size
CCG1254-A	16V	22uF	3216
CCG1236-A	35V	10uF	3216

10.23 IF UNIT (SERVICE) (BTOB CN)

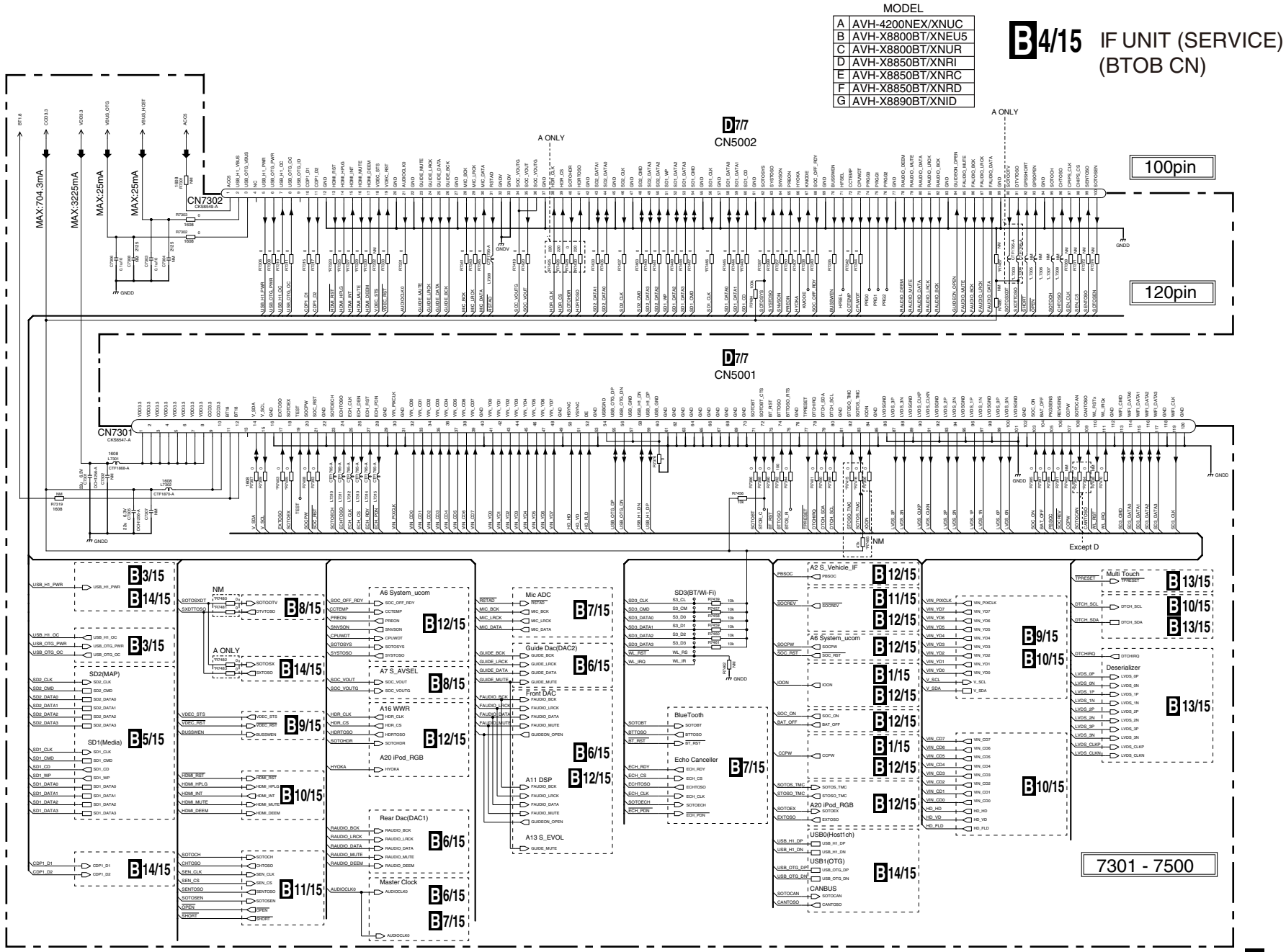

AVH-4200NEX/XNUC

10.24 IF UNIT (SERVICE) (SD IF)

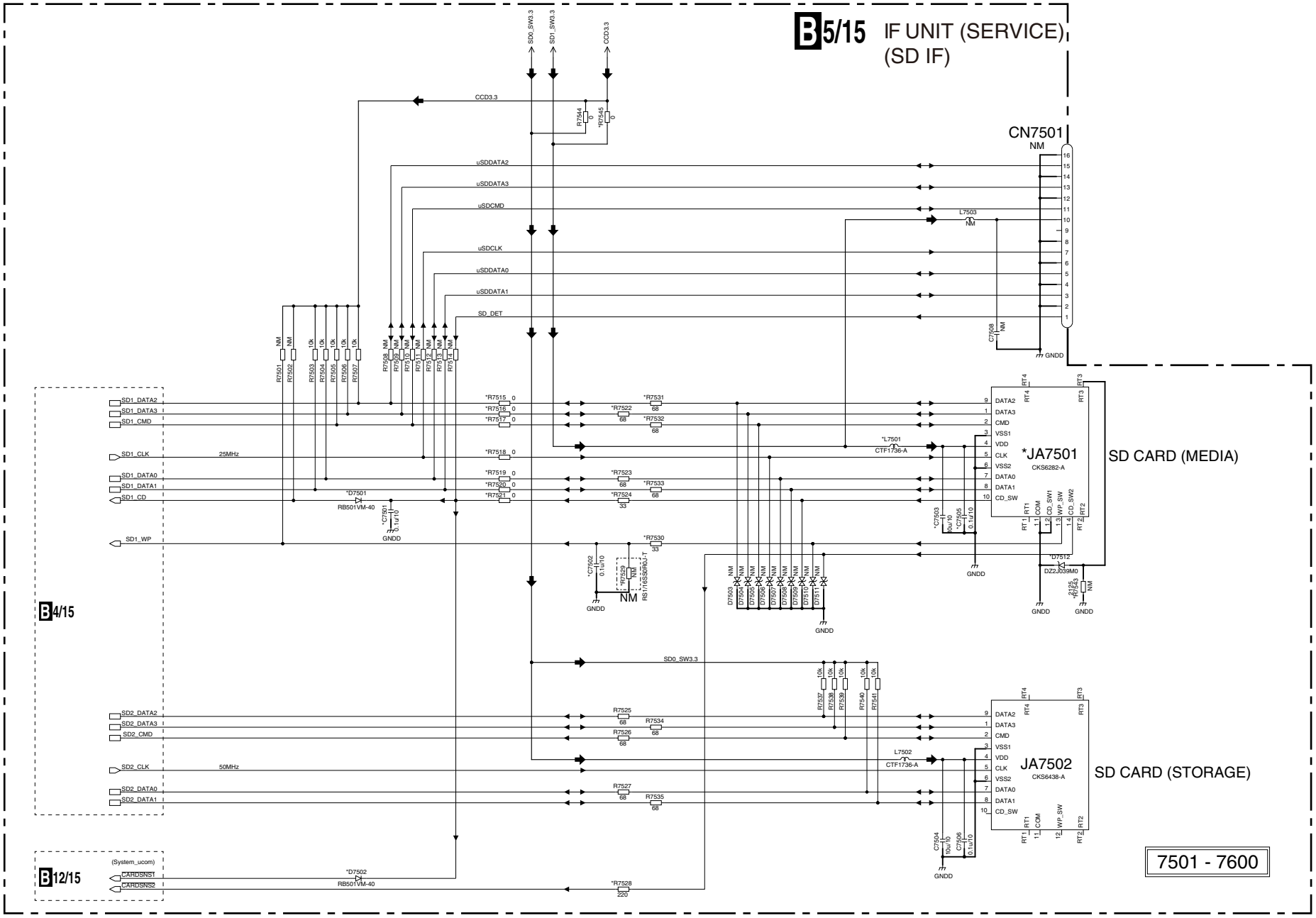

10.25 IF UNIT (SERVICE) (SOC DAC)

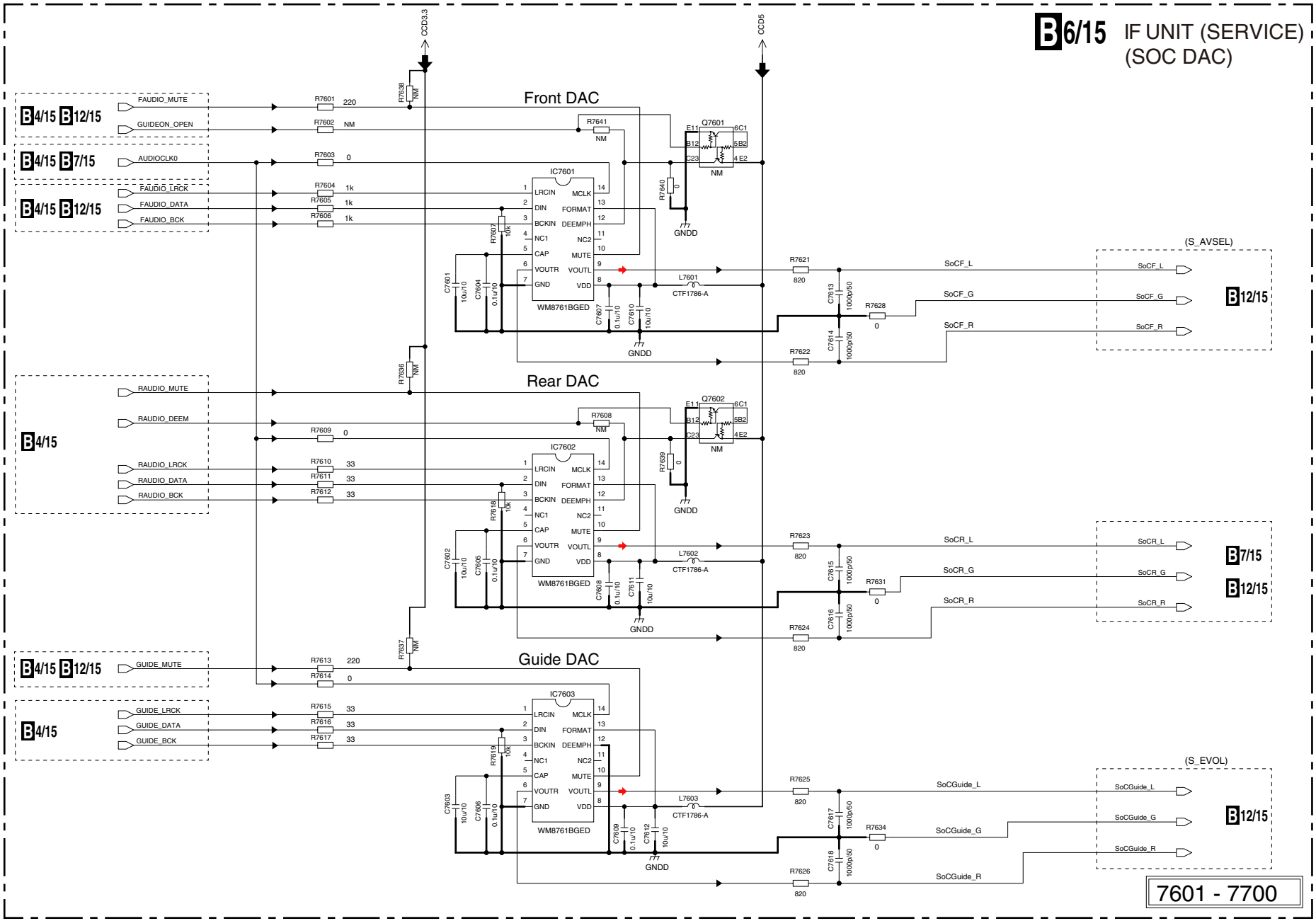

10.26 IF UNIT (SERVICE) (BT MIC)

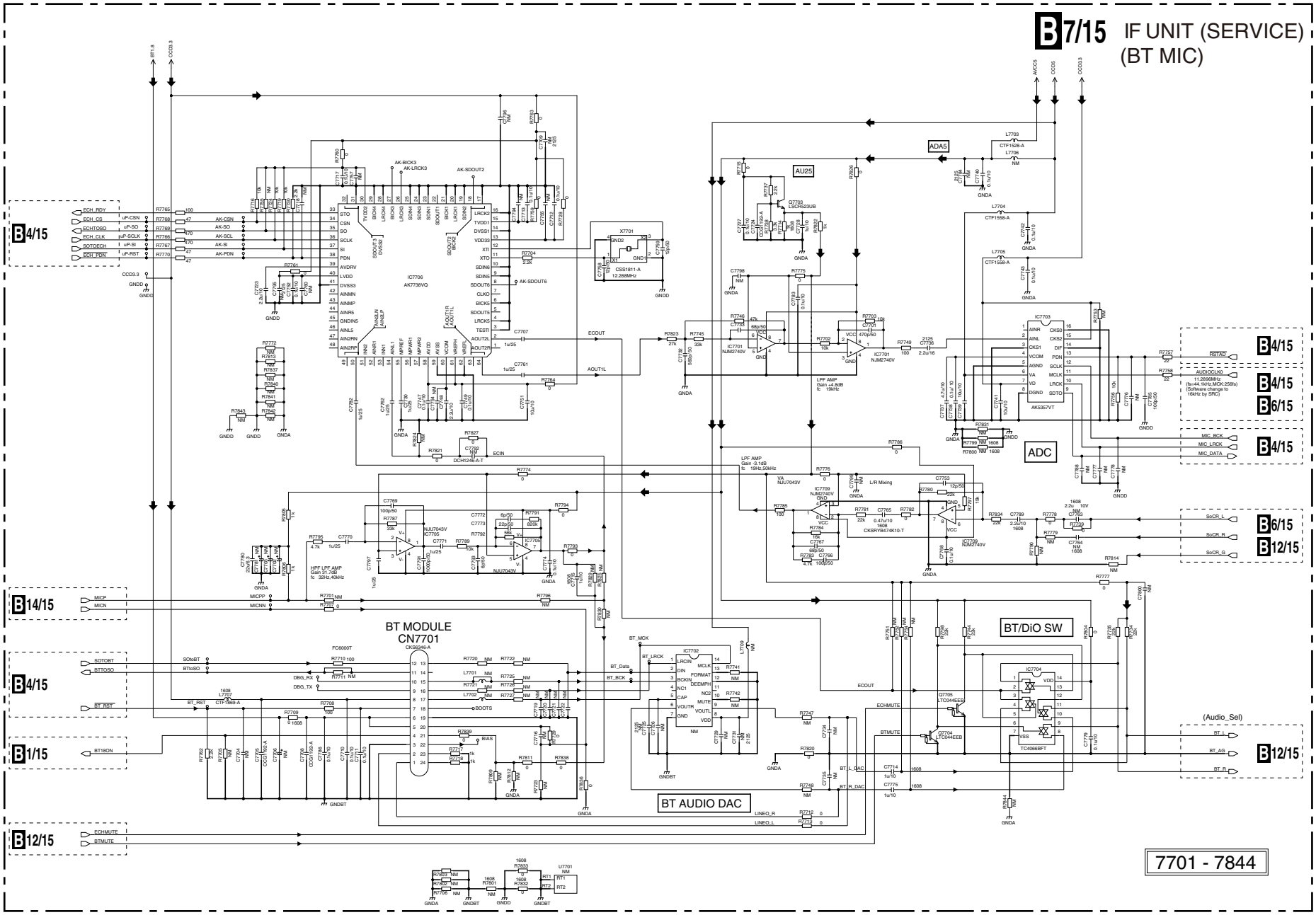

10.27 IF UNIT (SERVICE) (DTV IF)

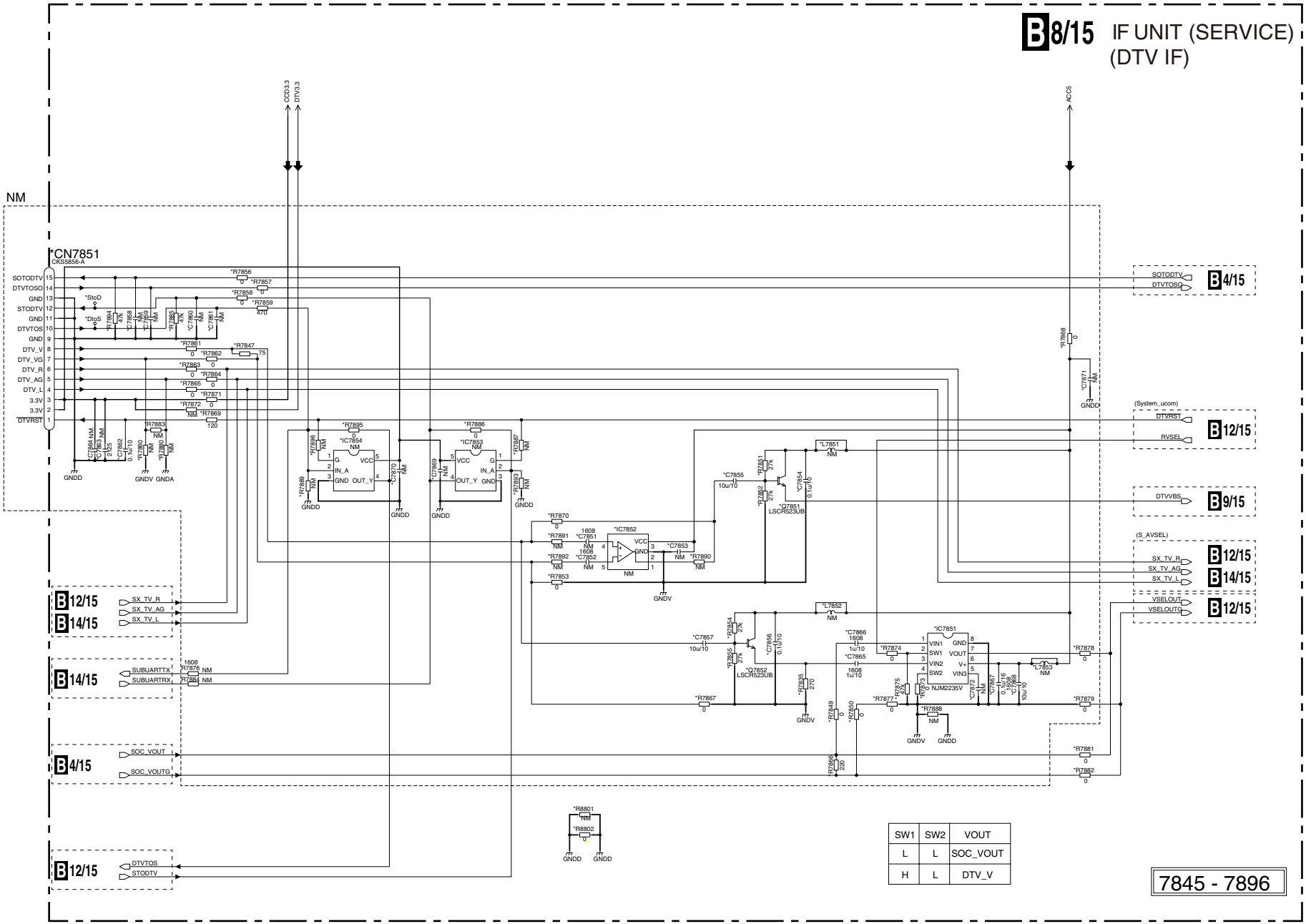

AVH-4200NEX/XNUC

B 8/15

B 8/15

10.28 IF UNIT (SERVICE) (VIDEO DECODER)

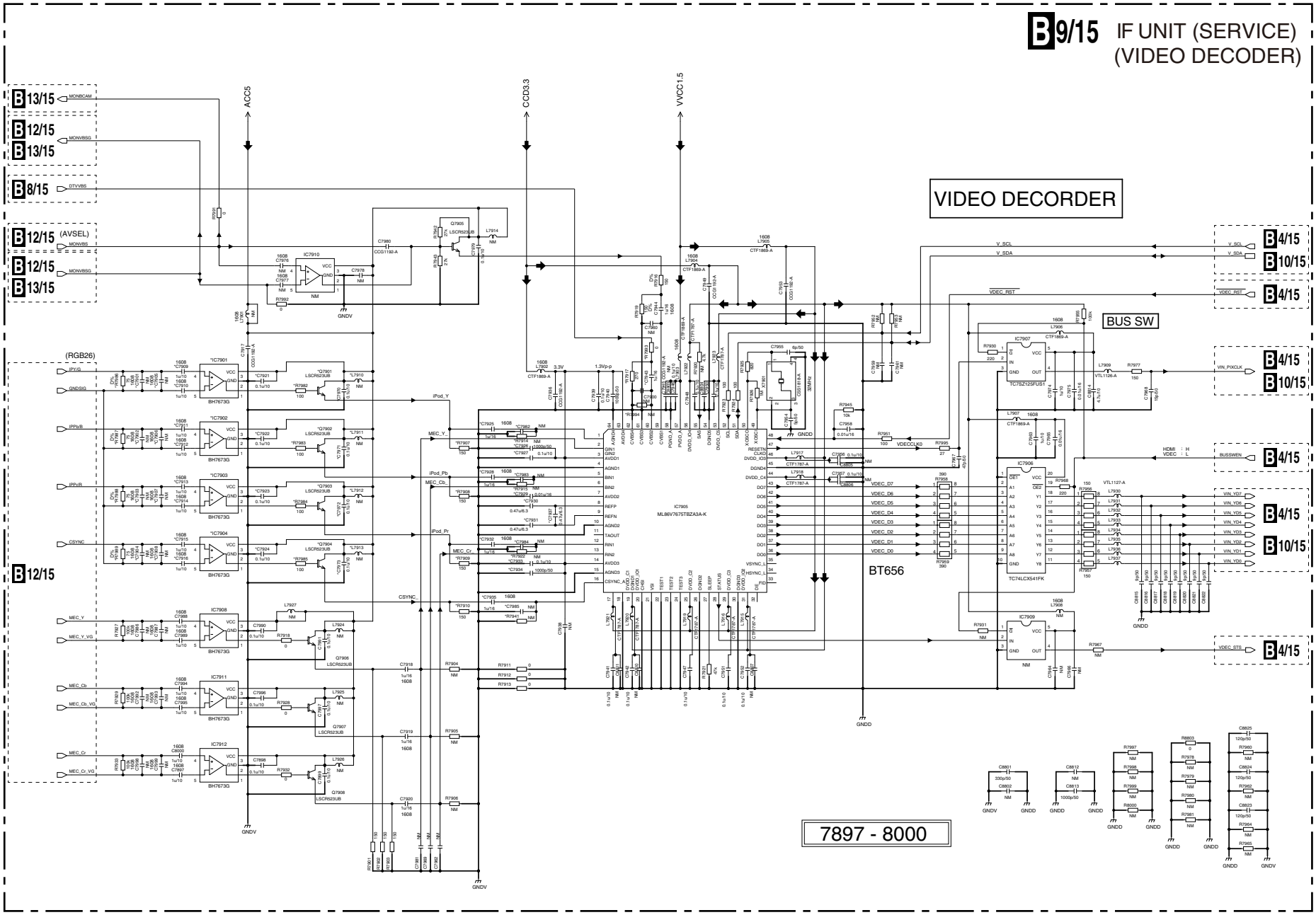

B9/15

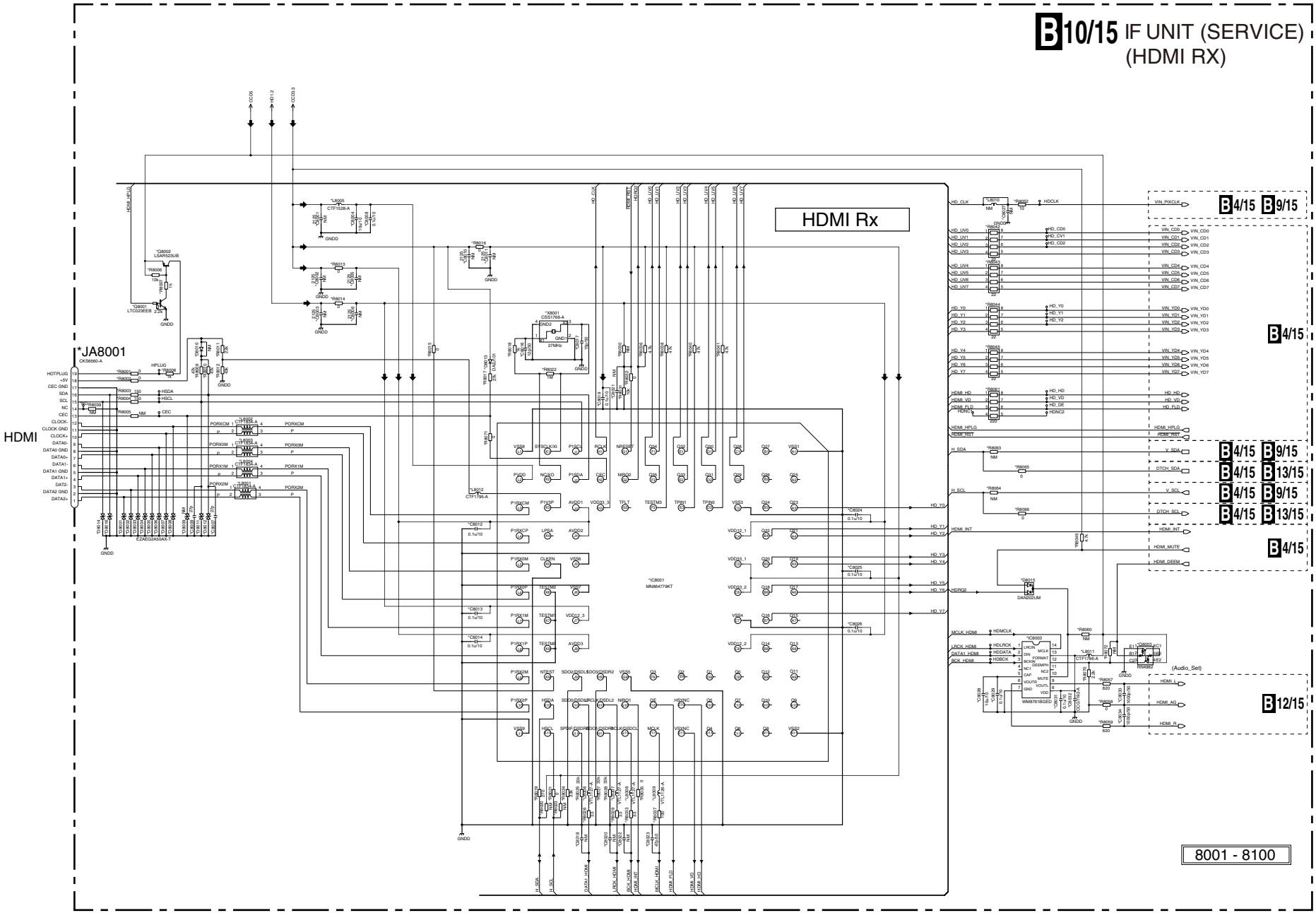
B10/15 IF UNIT (SERVICE)
(HDMI RX)
HDMI Rx
*JA8001
HDMI
*IC8001
MN864779KT
B4/15 B9/15
B4/15
B4/15 B9/15
B4/15 B13/15
B4/15 B9/15
B4/15 B13/15
B4/15
B12/15
(Audio_Set)
8001 - 8100

10.30 IF UNIT (SERVICE) (CHIPS IF)

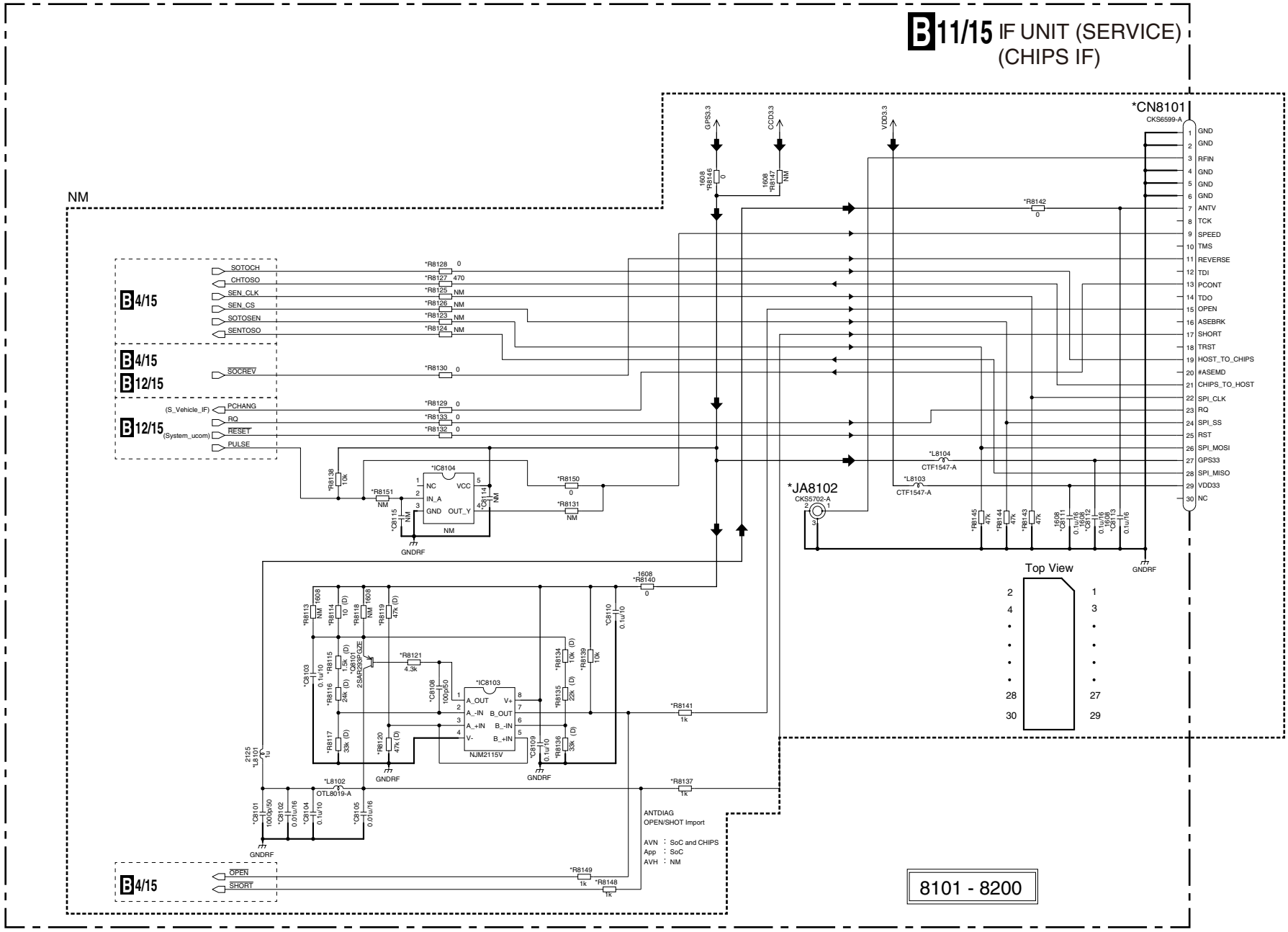

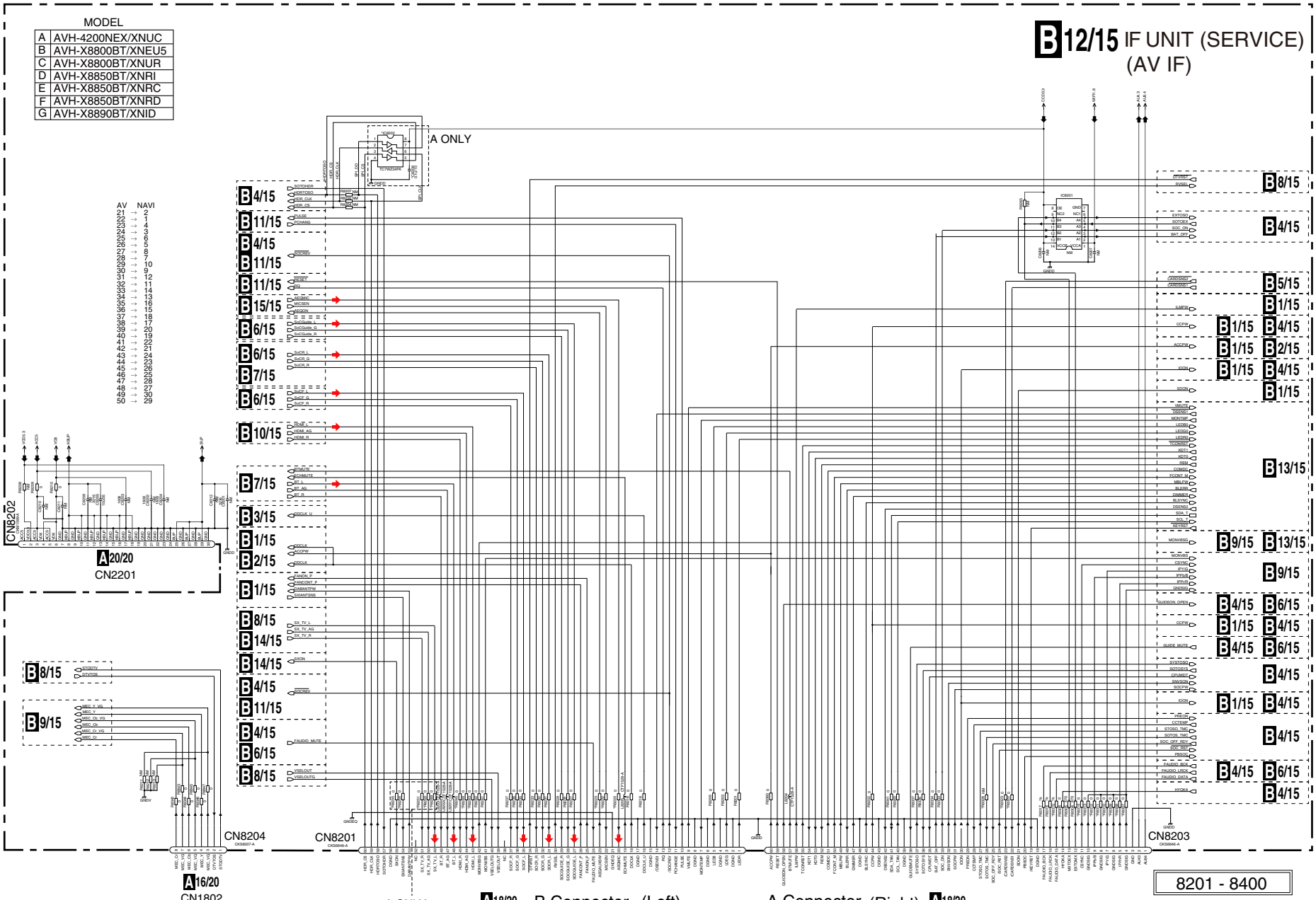
B 12/15 IF UNIT (SERVICE) (AV IF)
MODEL
A AVH-4200NEX/XNUC
B AVH-X8800BT/XNEU5
C AVH-X8800BT/XNUR
D AVH-X8850BT/XNRI
E AVH-X8850BT/XNRC
F AVH-X8850BT/XNRD
G AVH-X8890BT/XNID
AV NAVI
21 → 2
22 → 1
23 → 4
24 → 3
25 → 6
26 → 5
27 → 8
28 → 7
29 → 10
30 → 9
31 → 12
32 → 11
33 → 14
34 → 13
35 → 16
36 → 15
37 → 18
38 → 17
39 → 20
40 → 19
41 → 22
42 → 21
43 → 24
44 → 23
45 → 26
46 → 25
47 → 28
48 → 27
49 → 30
50 → 29
A ONLY
CN8202
A 20/20
CN2201
CN8204
A 16/20
CN1802
CN8201
A ONLY
A 18/20
CN2002
B Connector (Left)
A Connector (Right)
A 18/20
CN2001
CN8203
8201 - 8400

10.32 IF UNIT (SERVICE) (MONITOR IF)

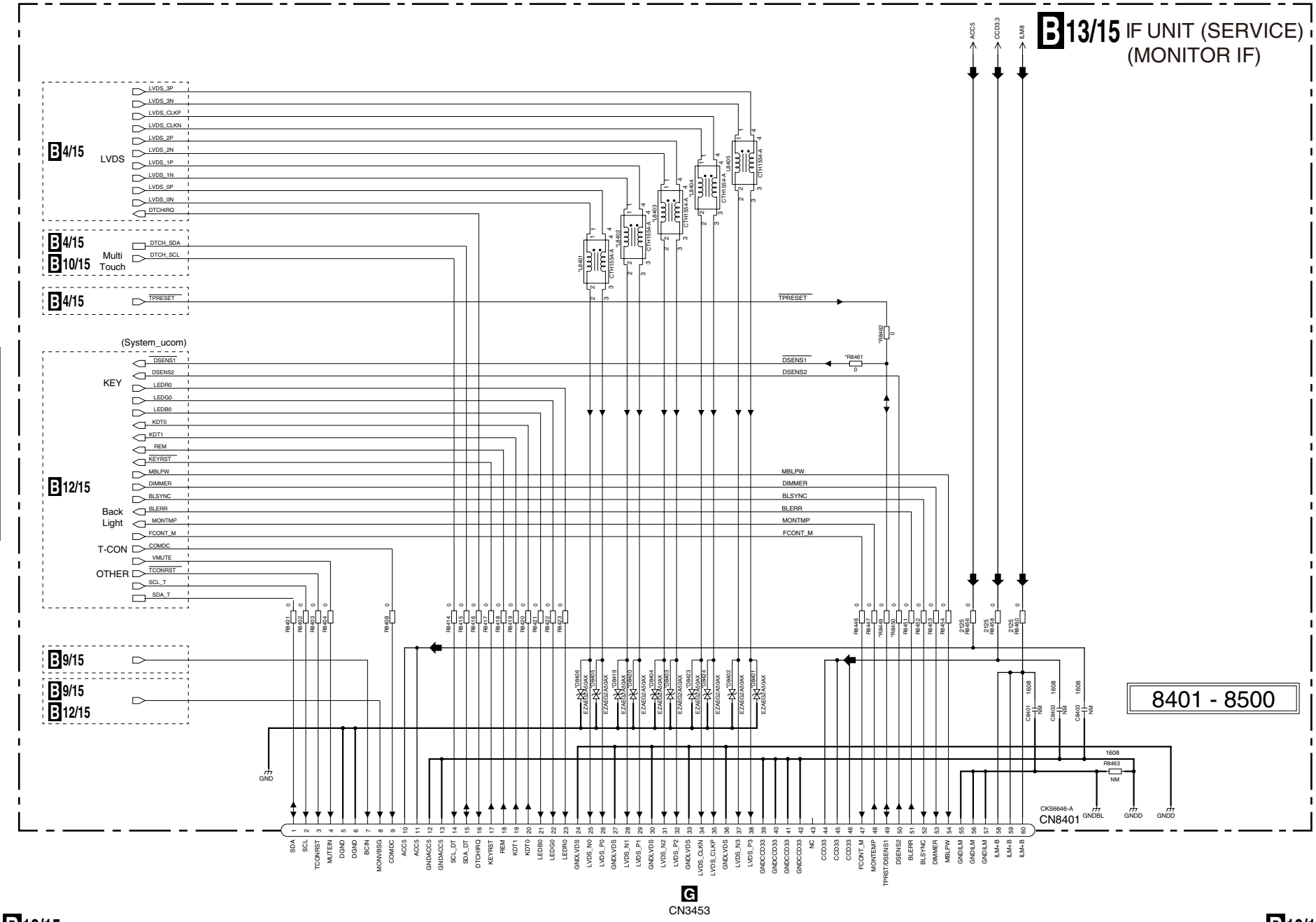

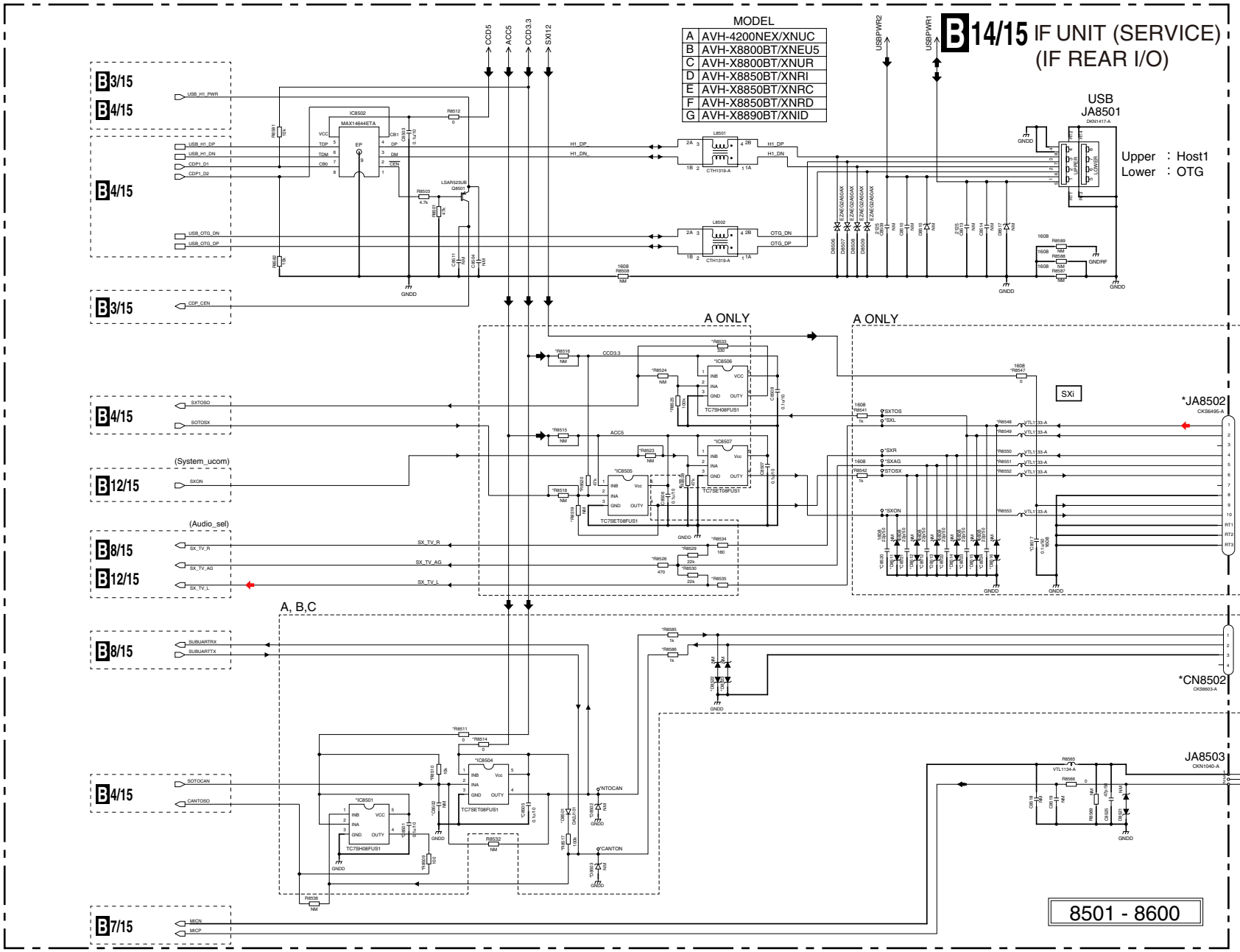
B14/15 IF UNIT (SERVICE) (IF REAR I/O)
MODEL
A AVH-4200NEX/XNUC
B AVH-X8800BT/XNEU5
C AVH-X8800BT/XNUR
D AVH-X8850BT/XNRI
E AVH-X8850BT/XNRC
F AVH-X8850BT/XNRD
G AVH-X8890BT/XNID
USB JA8501
Upper : Host1
Lower : OTG
A ONLY
A ONLY
SXI
*JA8502
SXI
CANBUS/iDataLink
*CN8502
A, B,C
JA8503
MIC
8501 - 8600
B3/15
B4/15
B4/15
B3/15
B4/15
(System_ucom)
B12/15
(Audio_sel)
B8/15
B12/15
B8/15
B4/15
B7/15

10.34 IF UNIT (SERVICE) (AEQ IF)

B 15/15 IF UNIT (SERVICE) (AEQ IF)

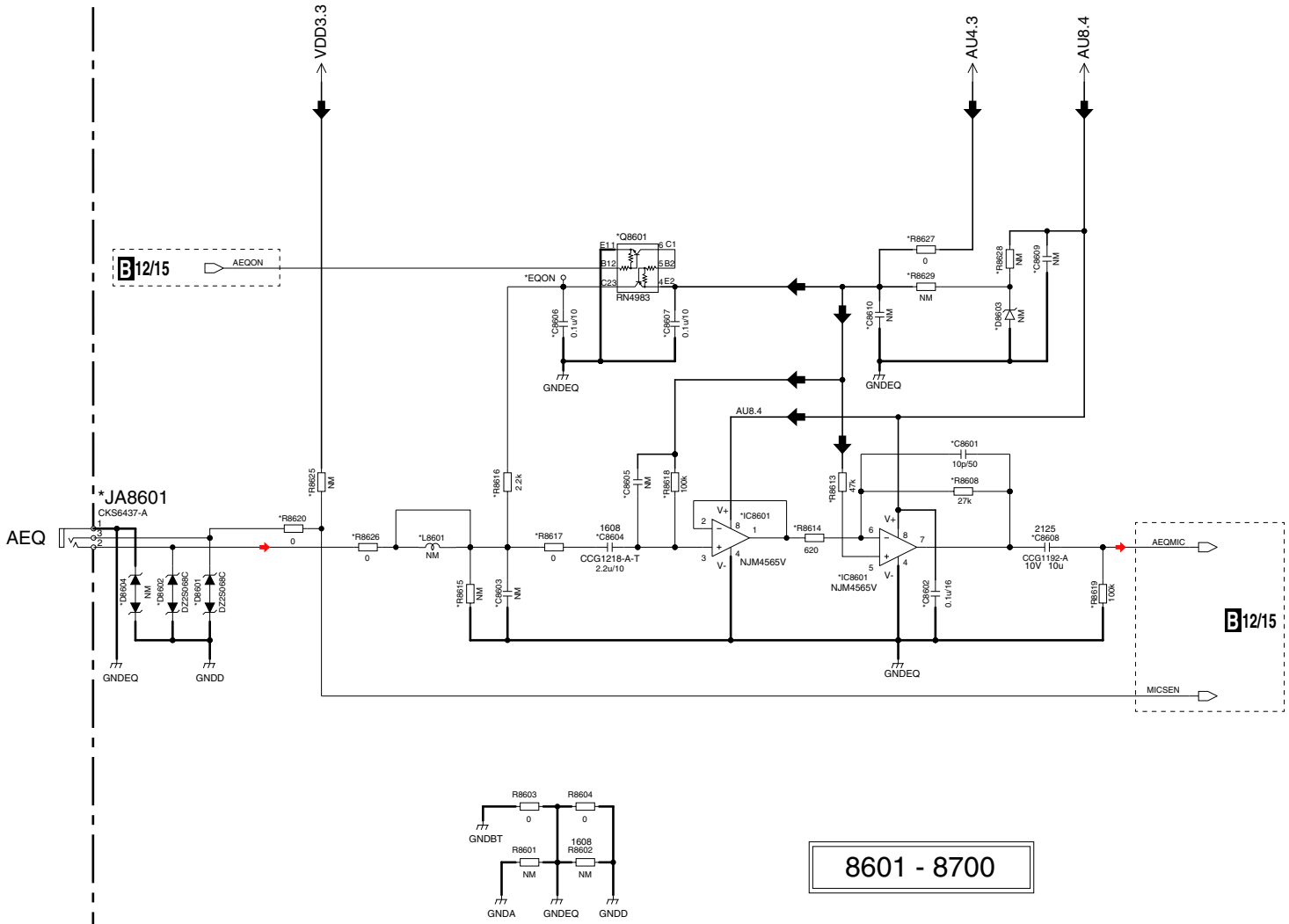

MODEL

A	AVH-4200NEX/XNUC
B	AVH-X8800BT/XNEU5
C	AVH-X8800BT/XNUR
D	AVH-X8850BT/XNRI
E	AVH-X8850BT/XNRC
F	AVH-X8850BT/XNRD
G	AVH-X8890BT/XNID

A ONLY: *R8709 0
B ONLY: *R8710 0
D ONLY: *R8713 0
C ONLY: *R8715 0

*R8701 0
*R8702 NM
*R8703 NM
*R8704 NM
*R8705 NM
*R8706 NM
*R8707 NM
*R8708 NM
*R8711 NM
*R8712 NM
*R8714 NM

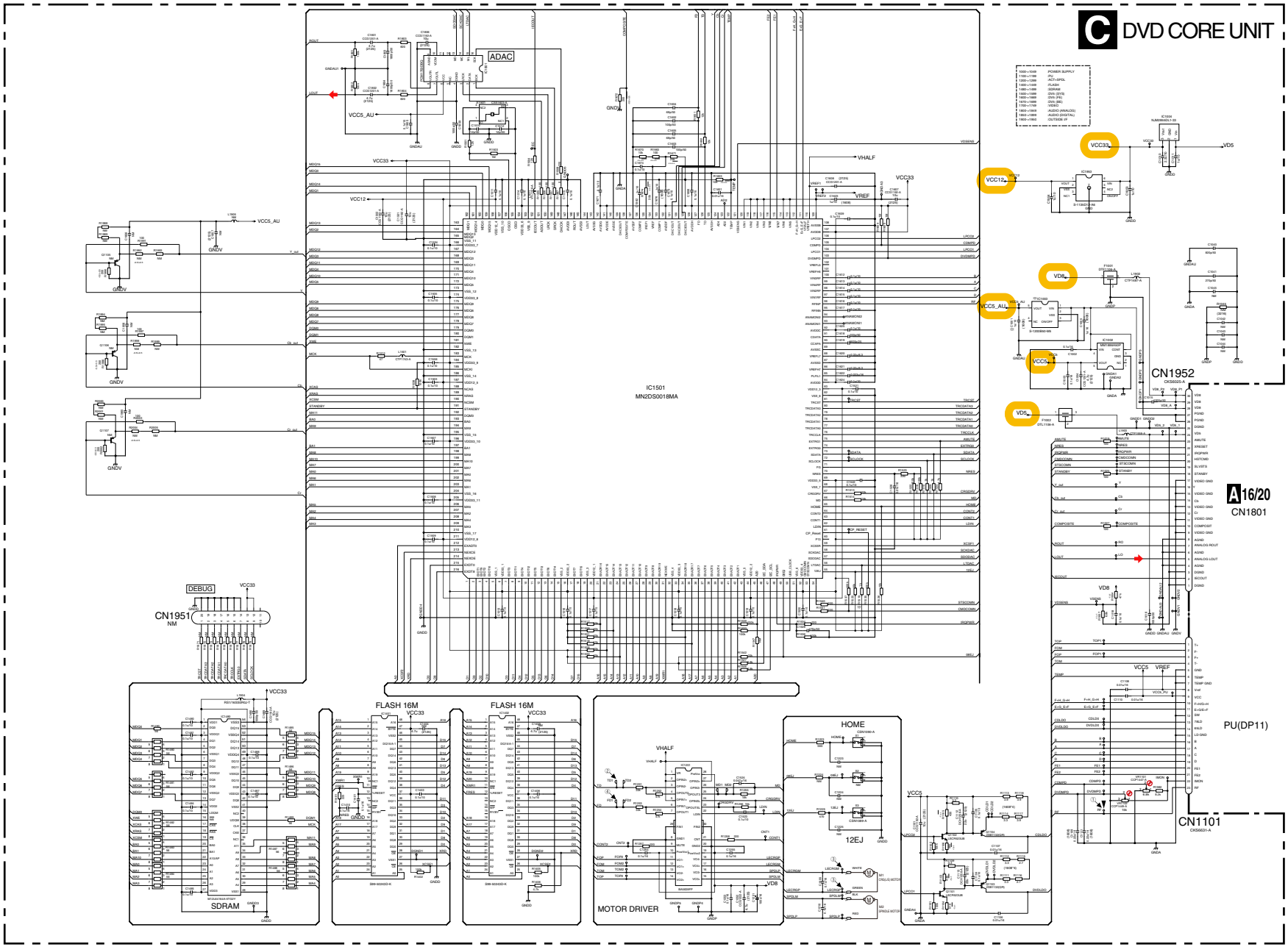
C DVD CORE UNIT
ADAC
IC1501
MN2DS0018MA
CN1952
CN1801
CN1951
NM
DEBUG
CN1101
PU(DP11)
SDRAM
FLASH 16M
FLASH 16M
MOTOR DRIVER
HOME
12EJ
VCC5_AU
VCC33
VCC12
VHALF
VREF
VCC5
VD5
VD8
GNDV
GNDD
GNDA

10.36 SOC SINGLE CORE UNIT (SOC)

D 1/7 SOC SINGLE CORE UNIT(SOC)

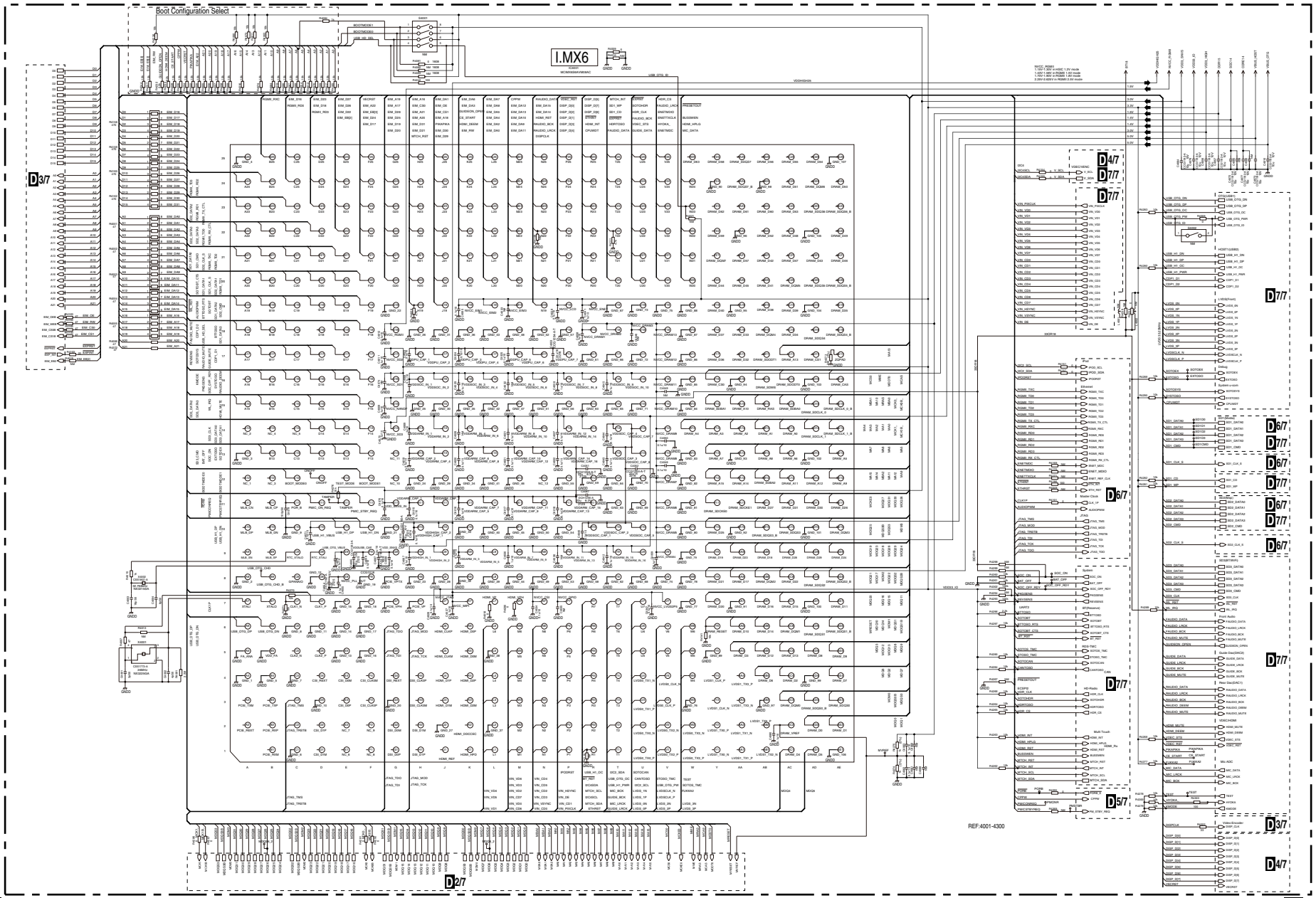

10.37 SOC SINGLE CORE UNIT (DDR3)

D 2/7 SOC SINGLE CORE UNIT(DDR3)

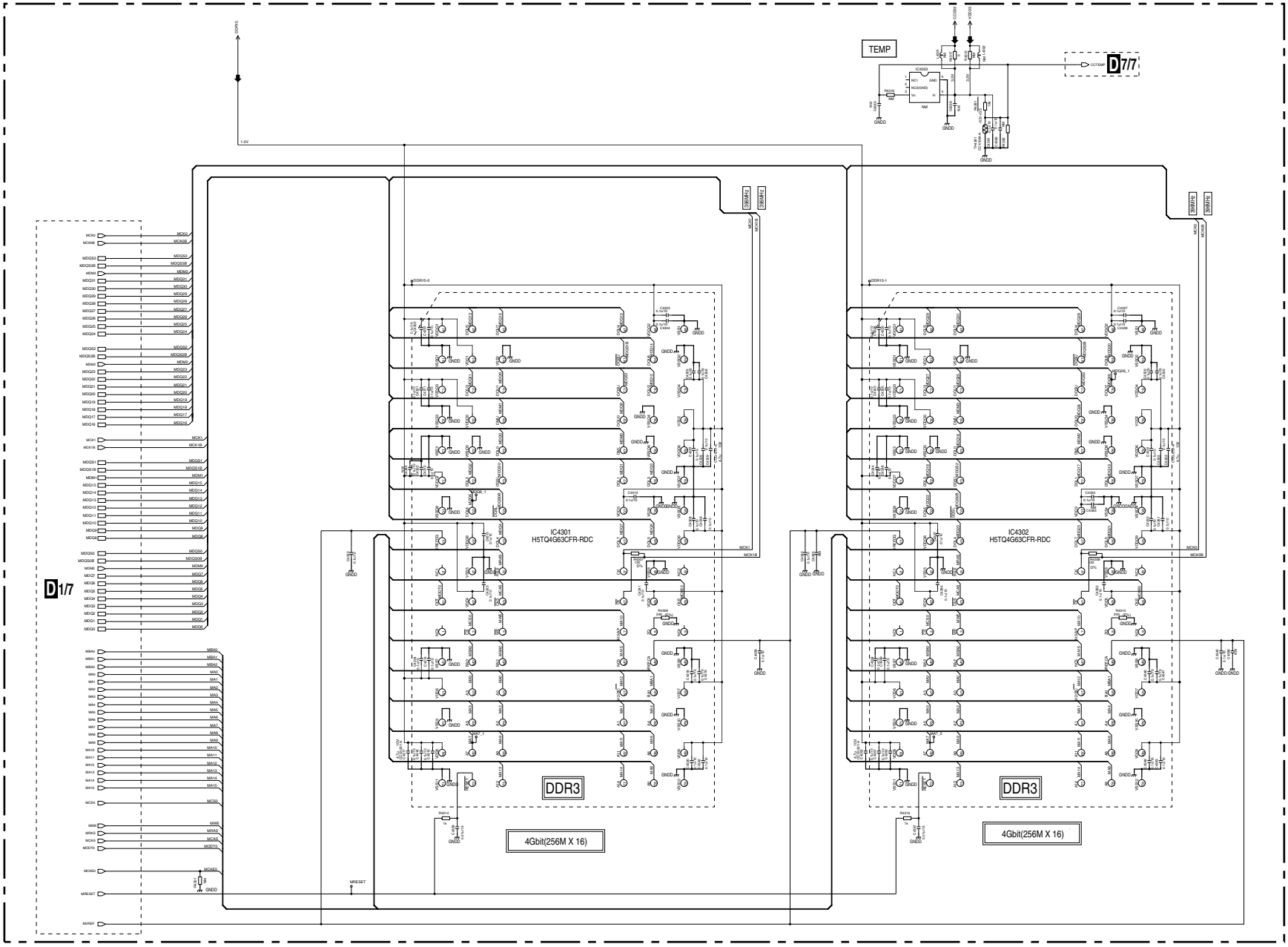

10.38 SOC SINGLE CORE UNIT (FLASH)

D 3/7 SOC SINGLE CORE UNIT(FLASH)

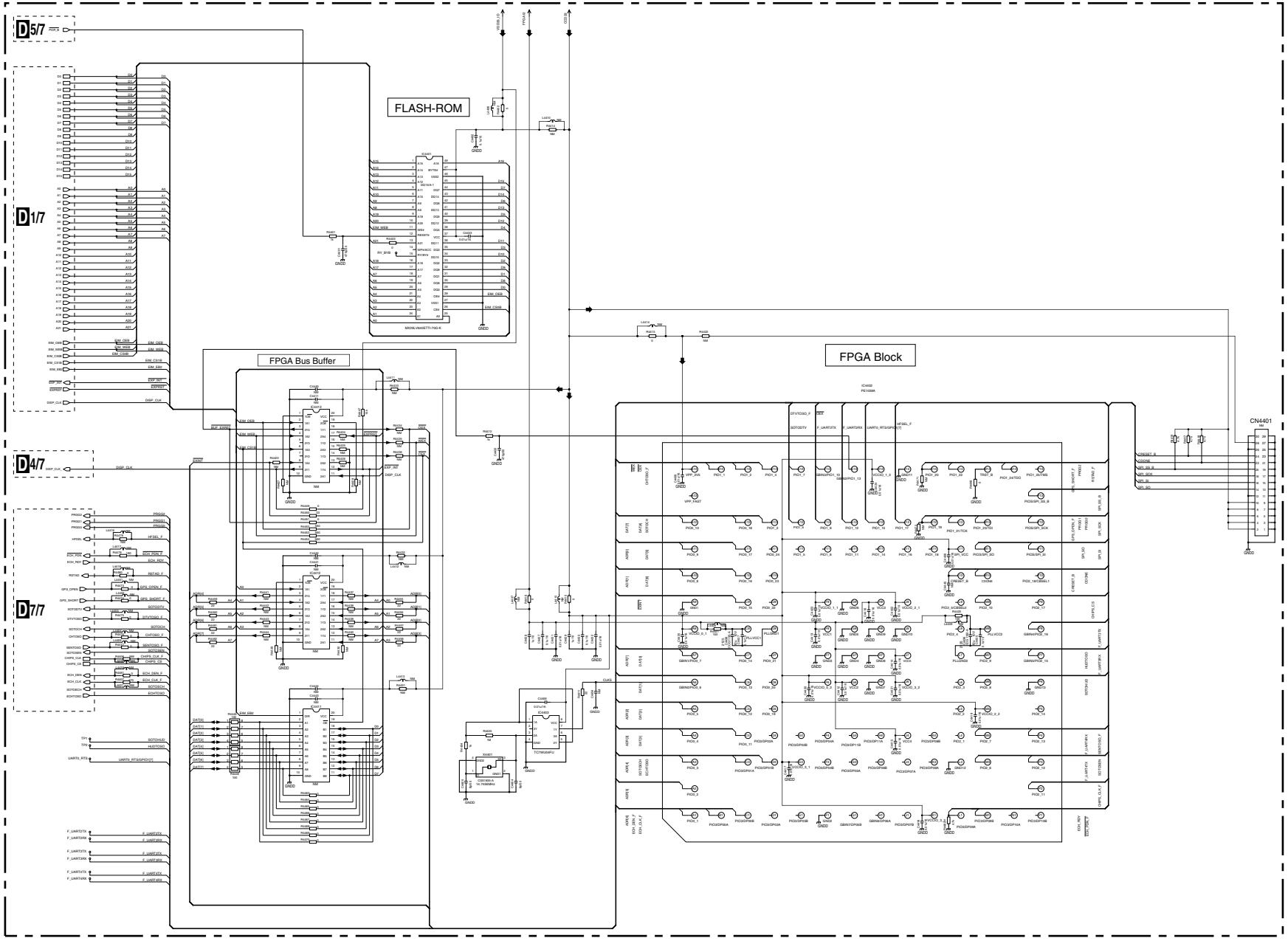

D 4/7 SOC SINGLE CORE UNIT(VENC)

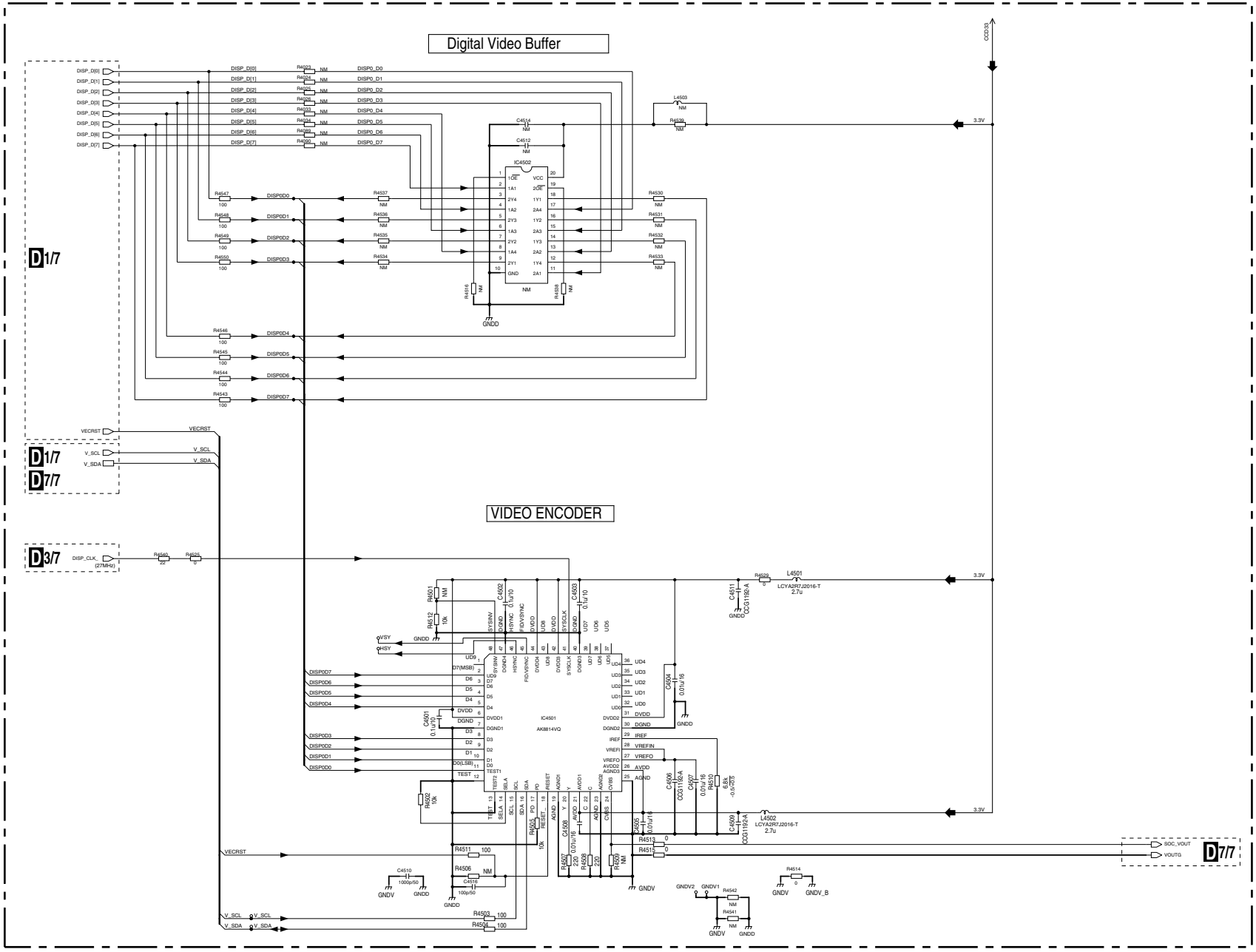

10.40 SOC SINGLE CORE UNIT (POWER/RESET)

D 5/7 SOC SINGLE CORE UNIT(POWER/RESET)

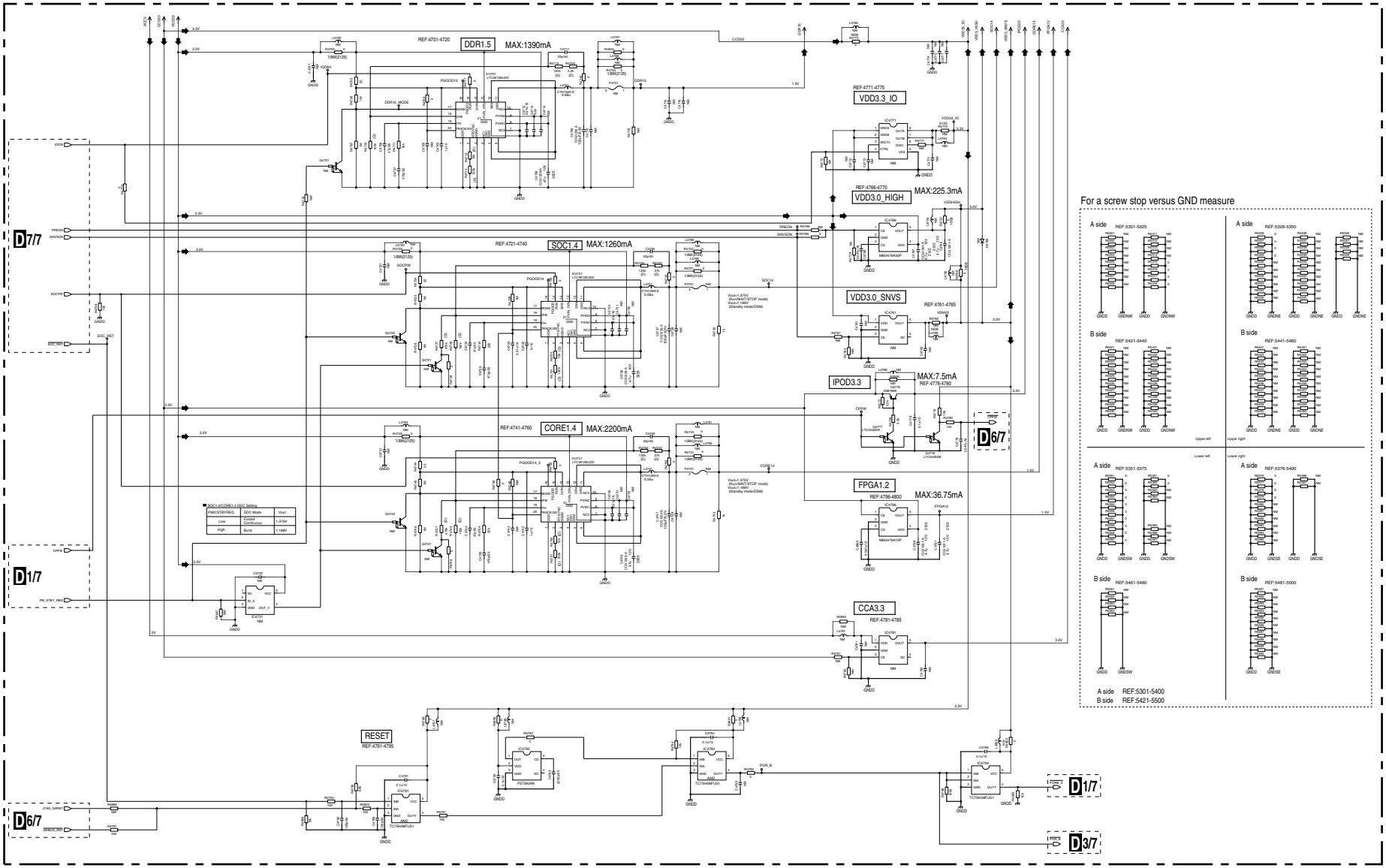

D 6/7 SOC SINGLE CORE UNIT(AROUND SOC)

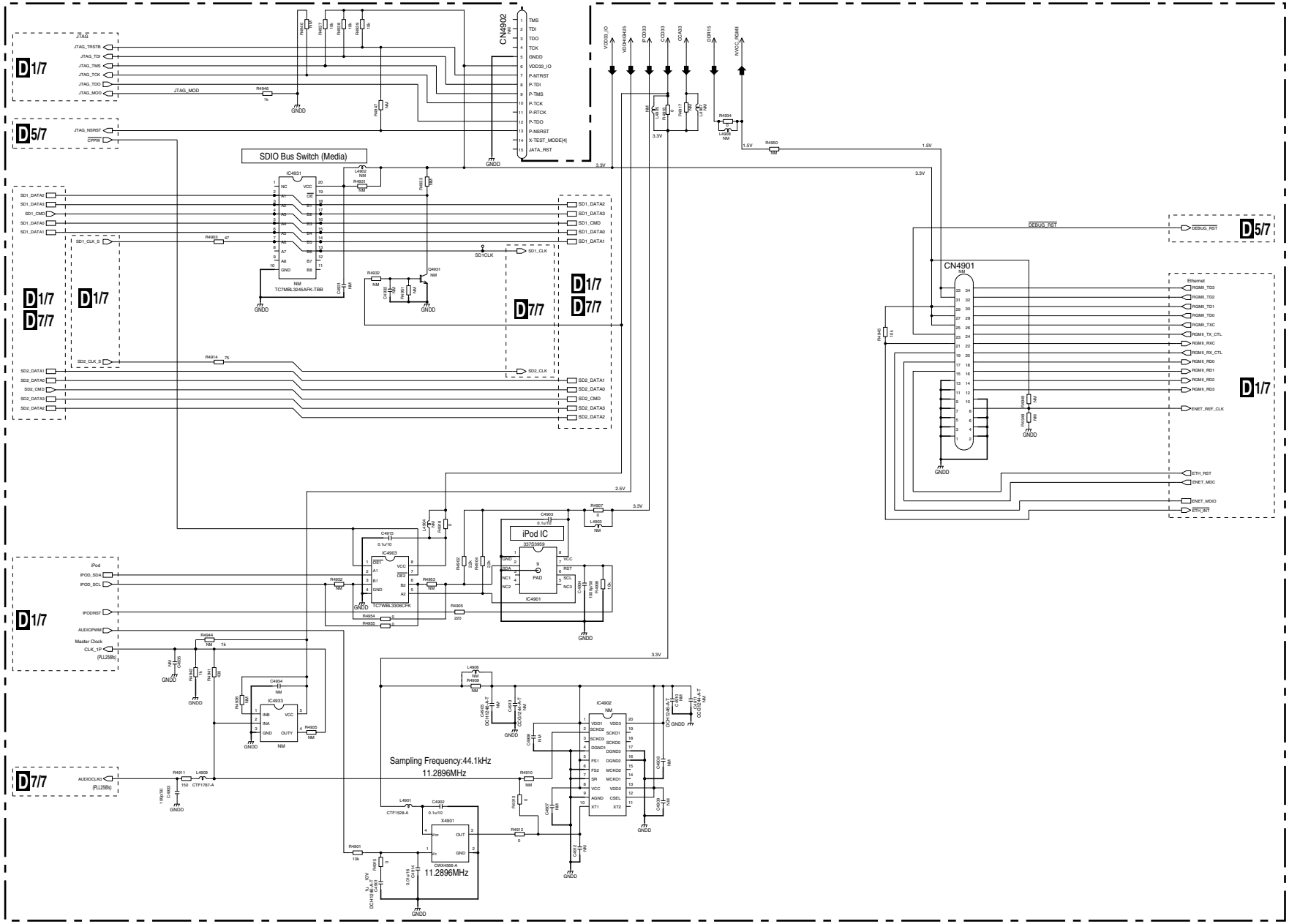

10.42 SOC SINGLE CORE UNIT (BTOB CN)

D 7/7 SOC SINGLE CORE UNIT(BTOB CN)

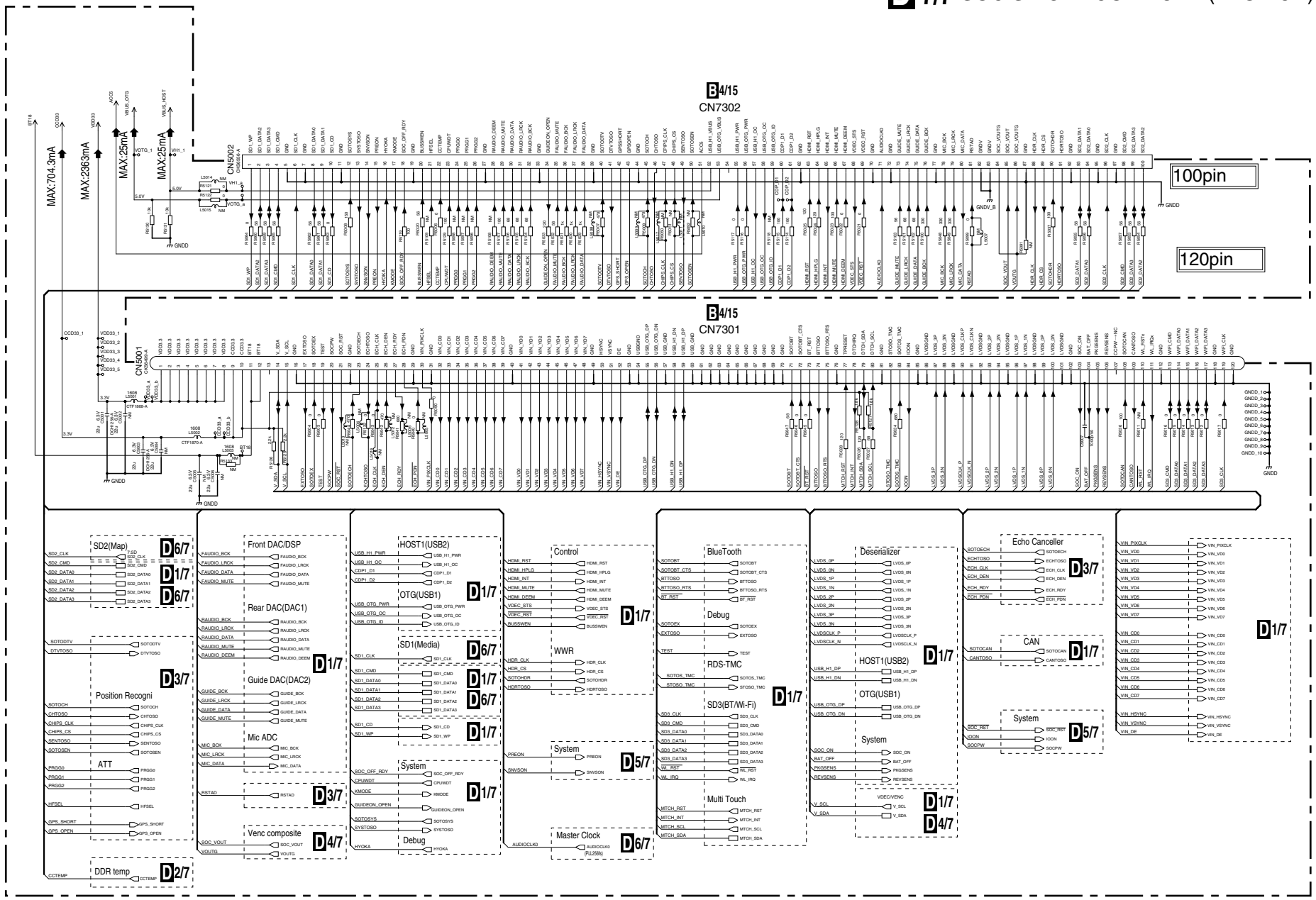

E 1/6 MONITOR UNIT(SERVICE)(MAIN IF)

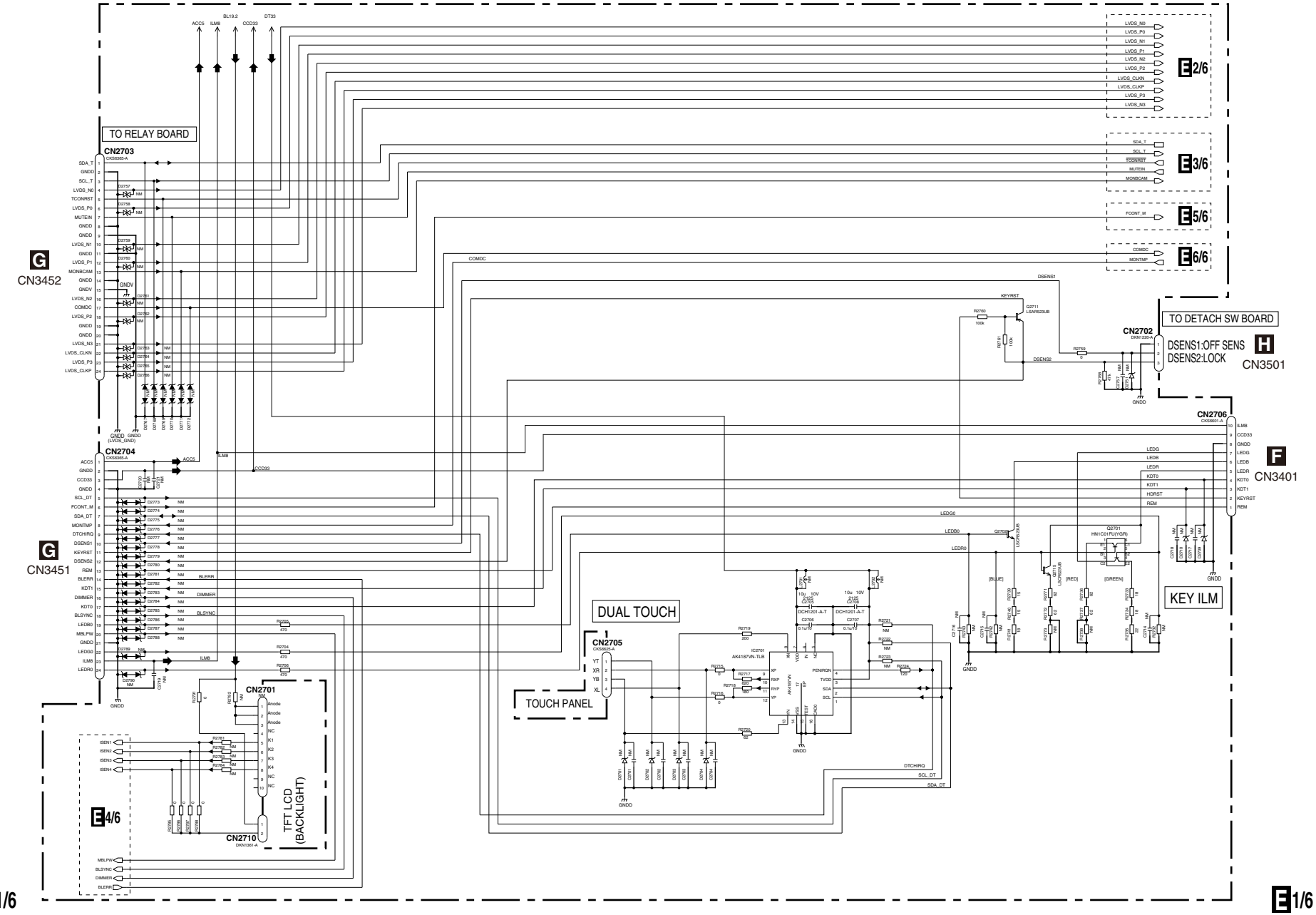

10.44 MONITOR UNIT (SERVICE) (LVDS)

E 2/6 MONITOR UNIT(SERVICE)(LVDS)

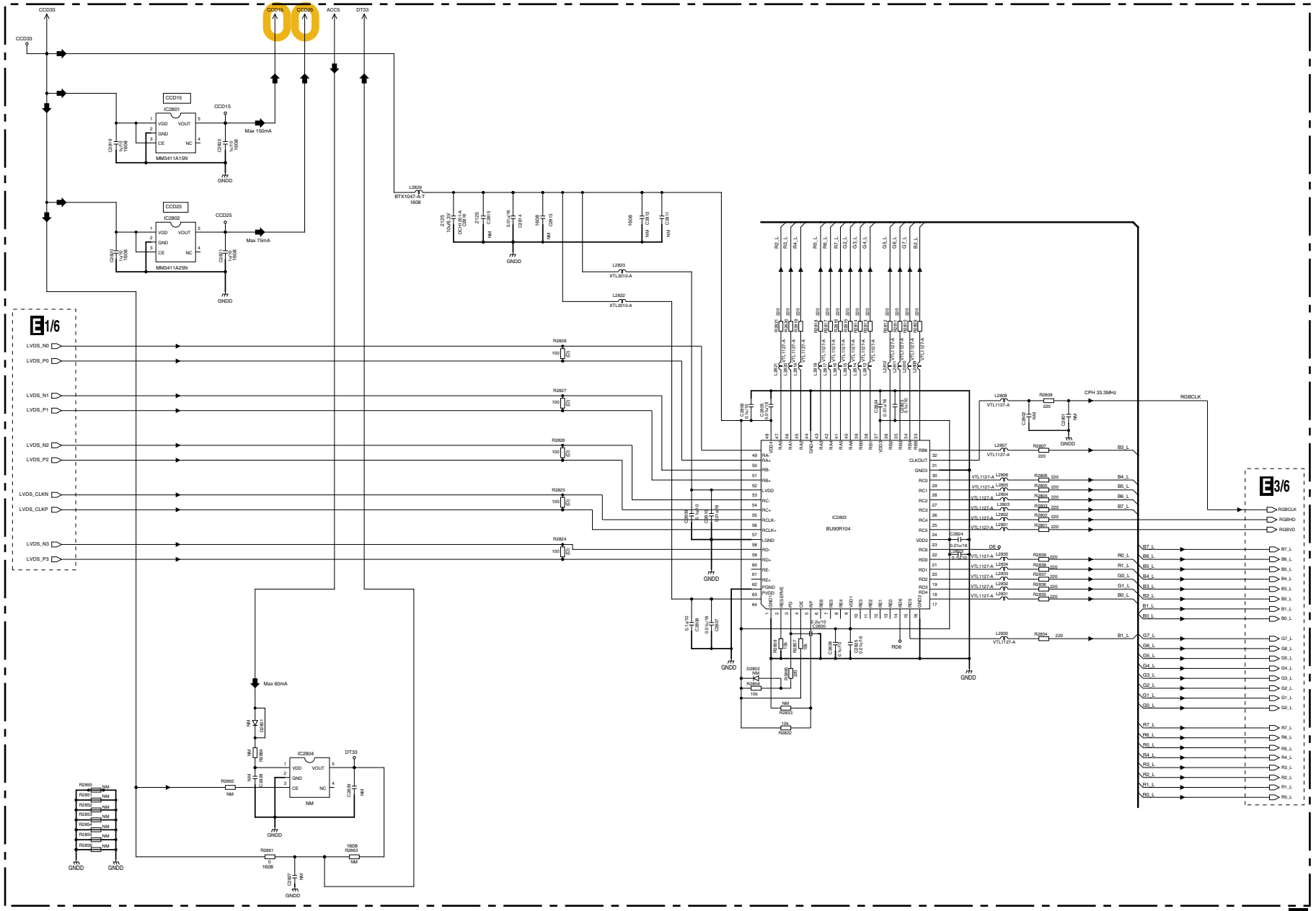

E 2/6

E 3/6 MONITOR UNIT(SERVICE)(T-CON)

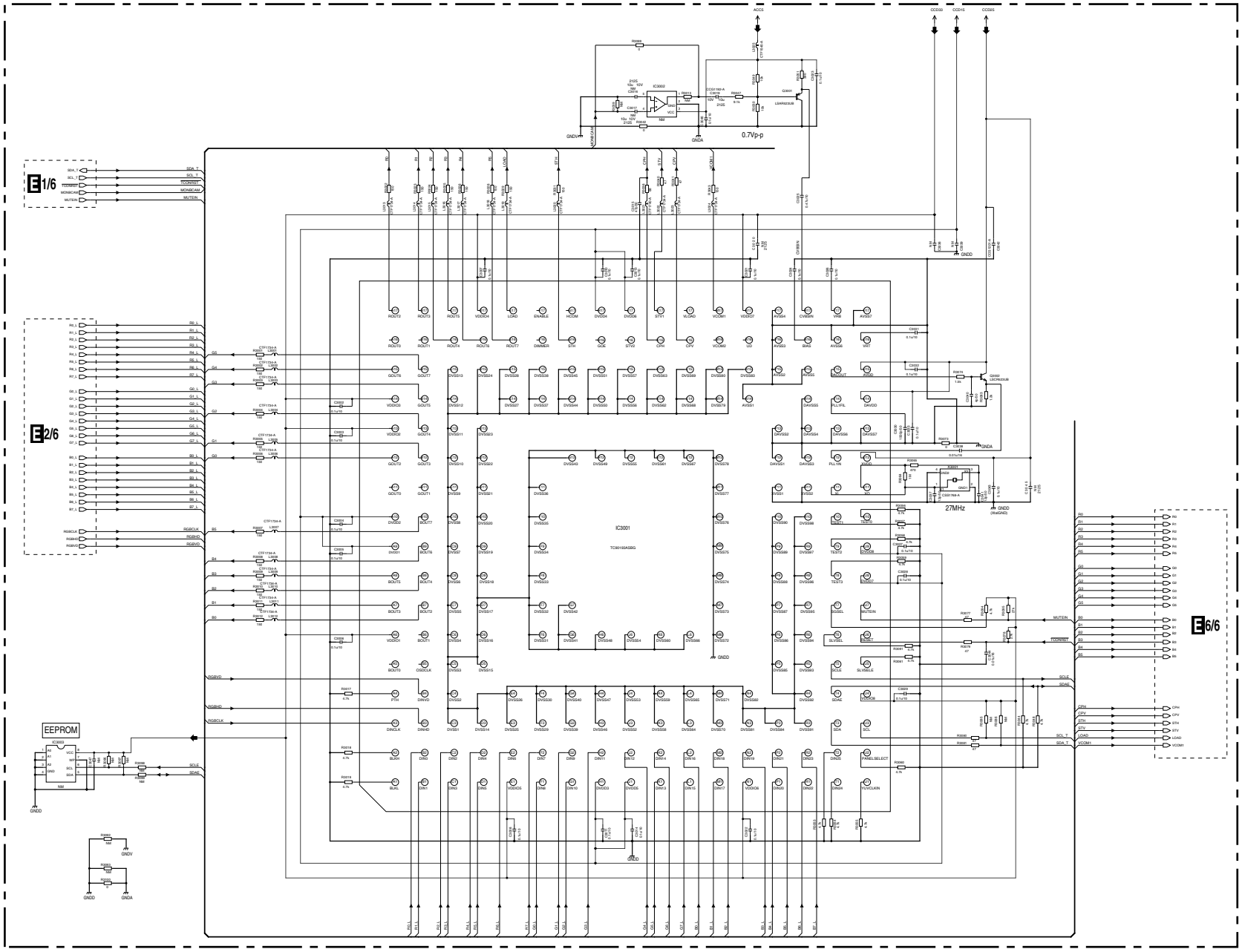

10.46 MONITOR UNIT (SERVICE) (BL DRIVER)

E 4/6 MONITOR UNIT(SERVICE)(BL DRIVER)

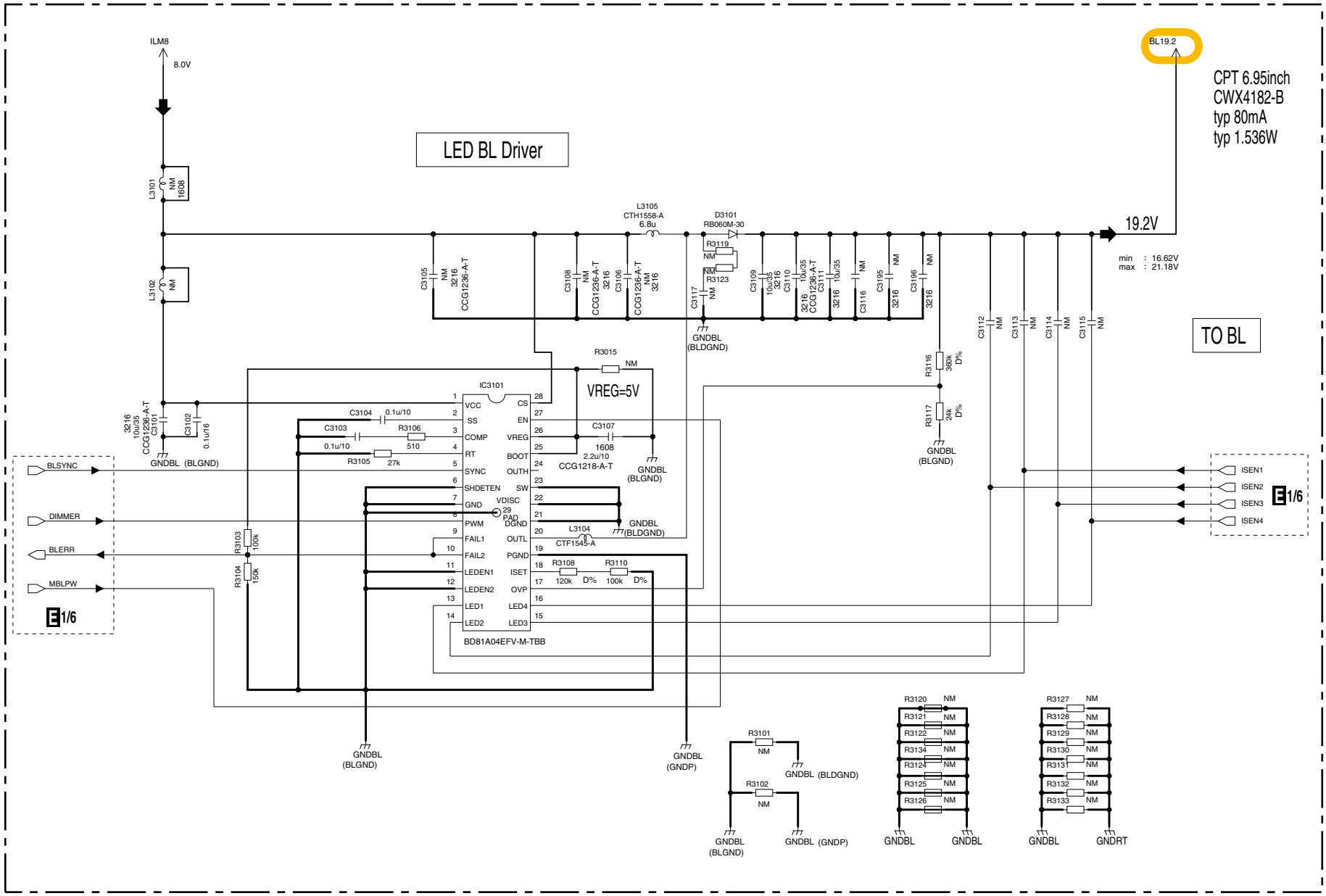

E 4/6

E 4/6

E 5/6 MONITOR UNIT(SERVICE)(LCD POWER)

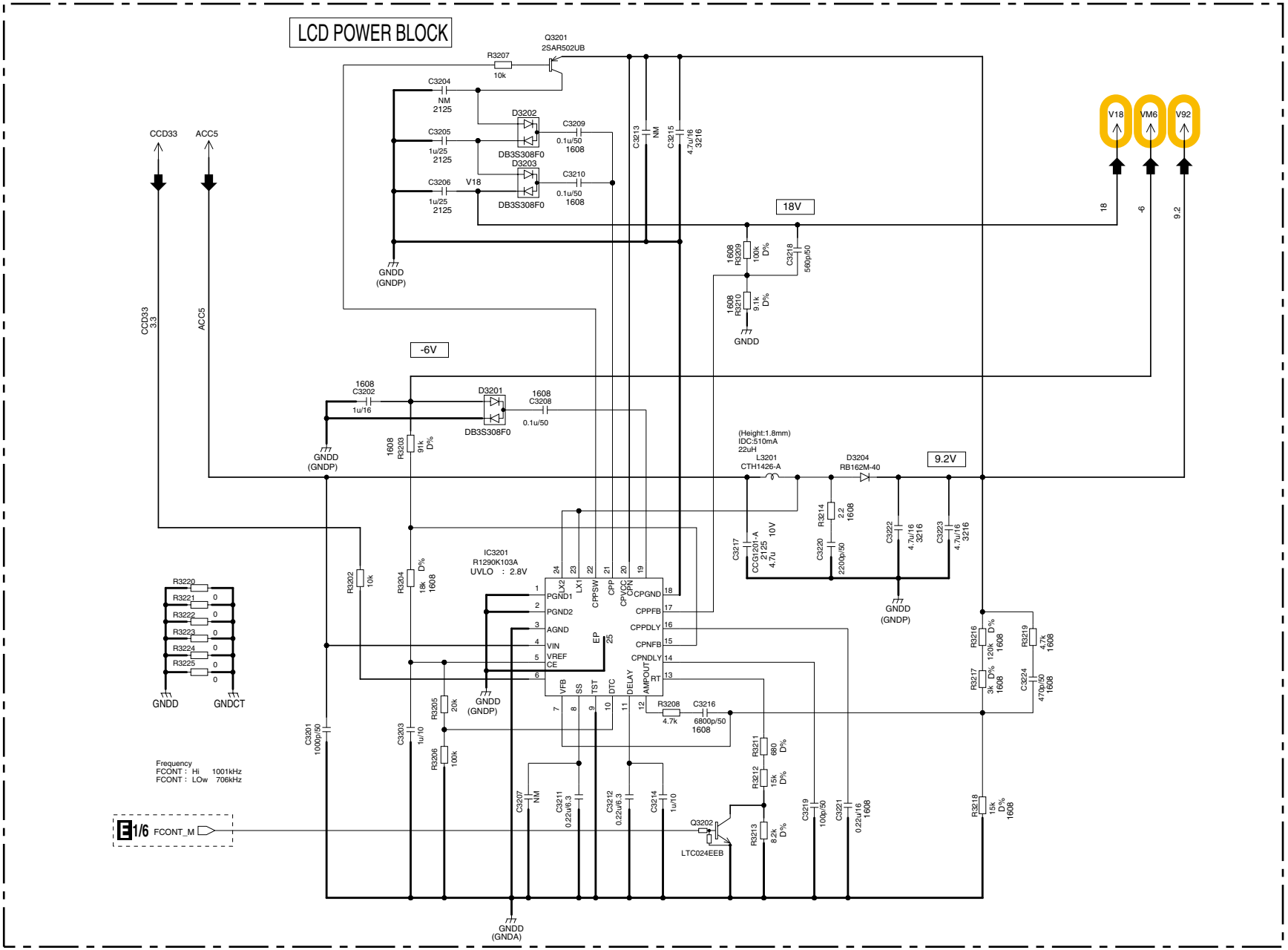

E 5/6

E 5/6

10.48 MONITOR UNIT (SERVICE) (LCD IF)

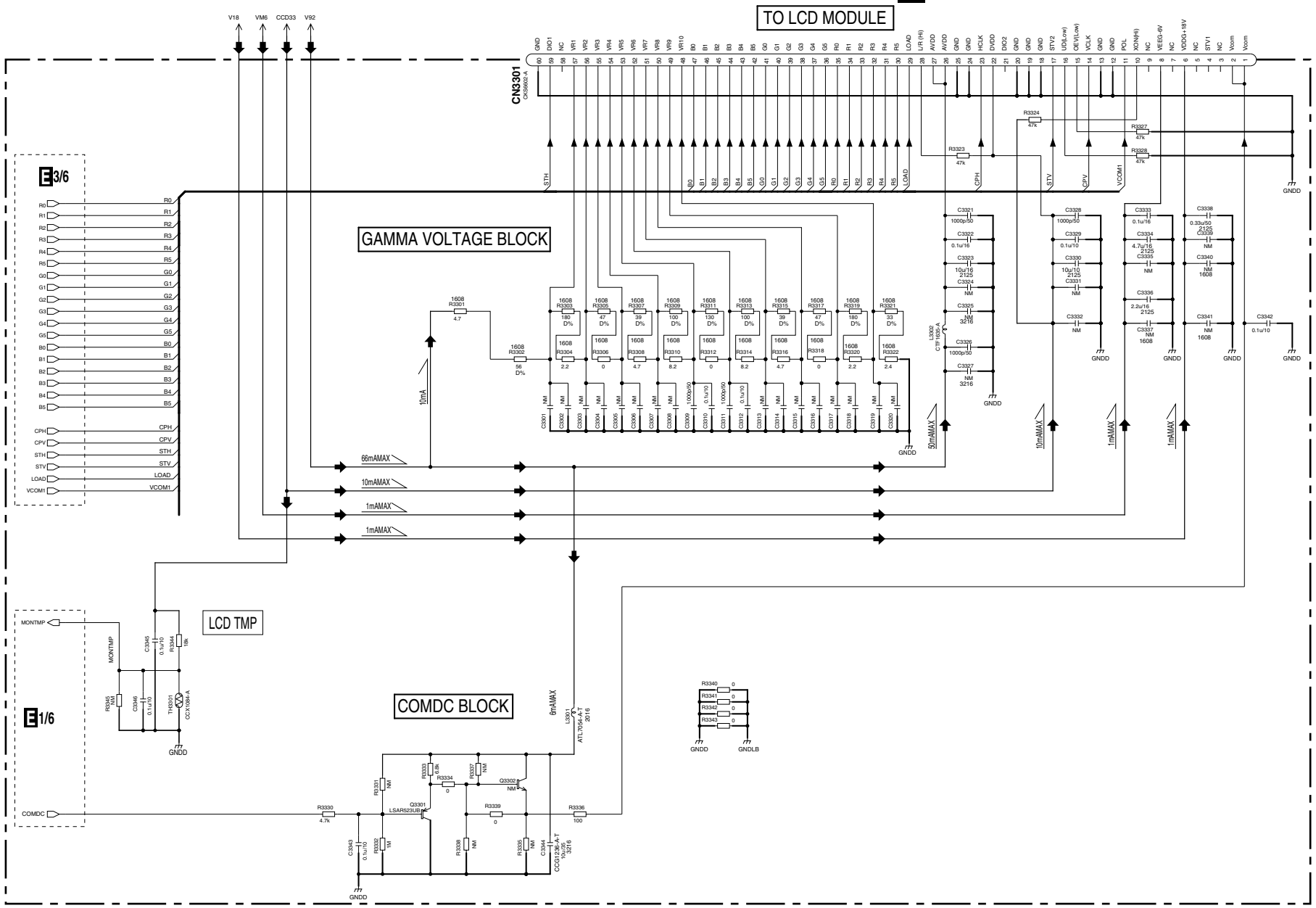

10.49 KEY UNIT (SERVICE)

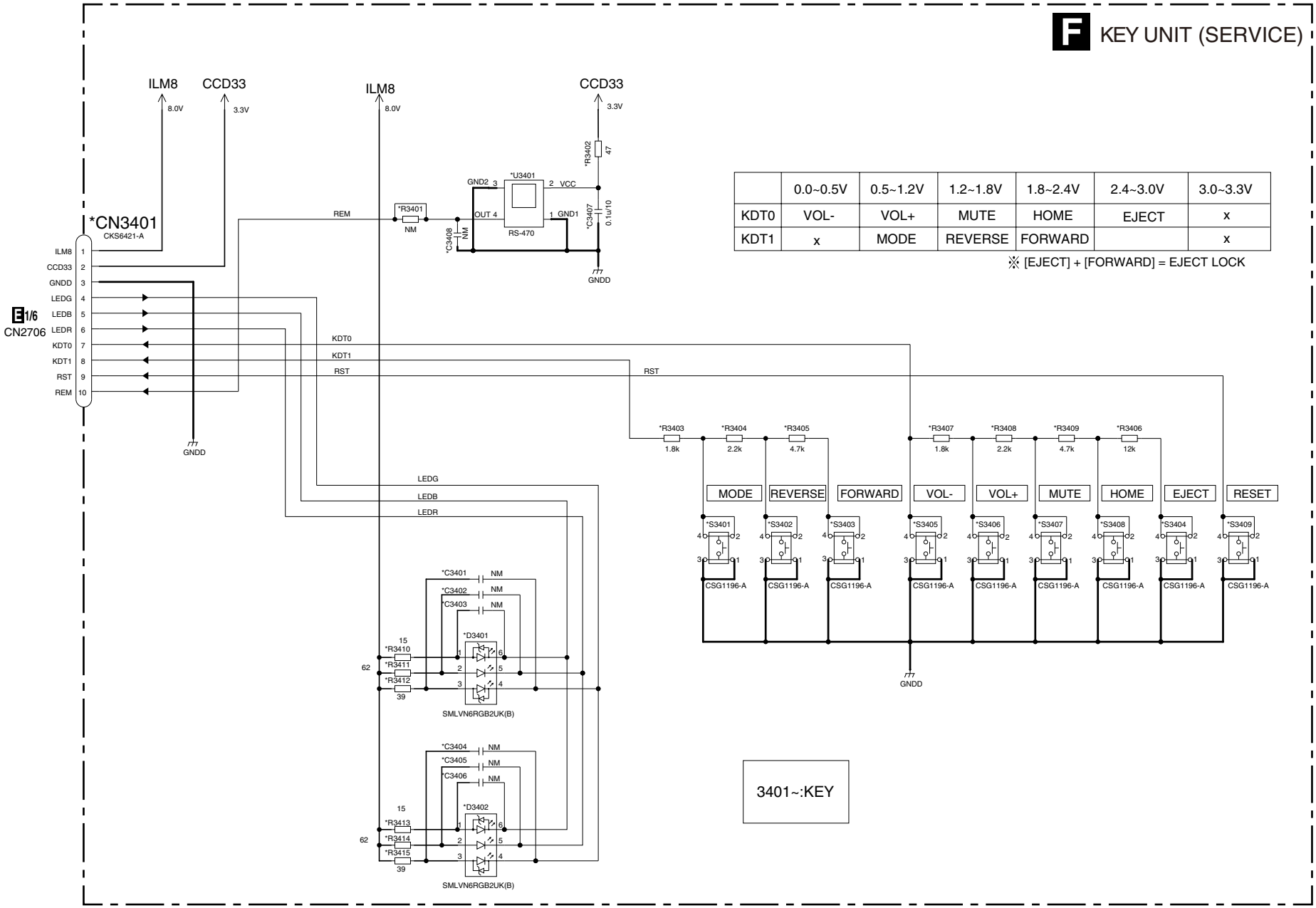

	0.0~0.5V	0.5~1.2V	1.2~1.8V	1.8~2.4V	2.4~3.0V	3.0~3.3V
KDT0	VOL-	VOL+	MUTE	HOME	EJECT	x
KDT1	x	MODE	REVERSE	FORWARD		x

※ [EJECT] + [FORWARD] = EJECT LOCK

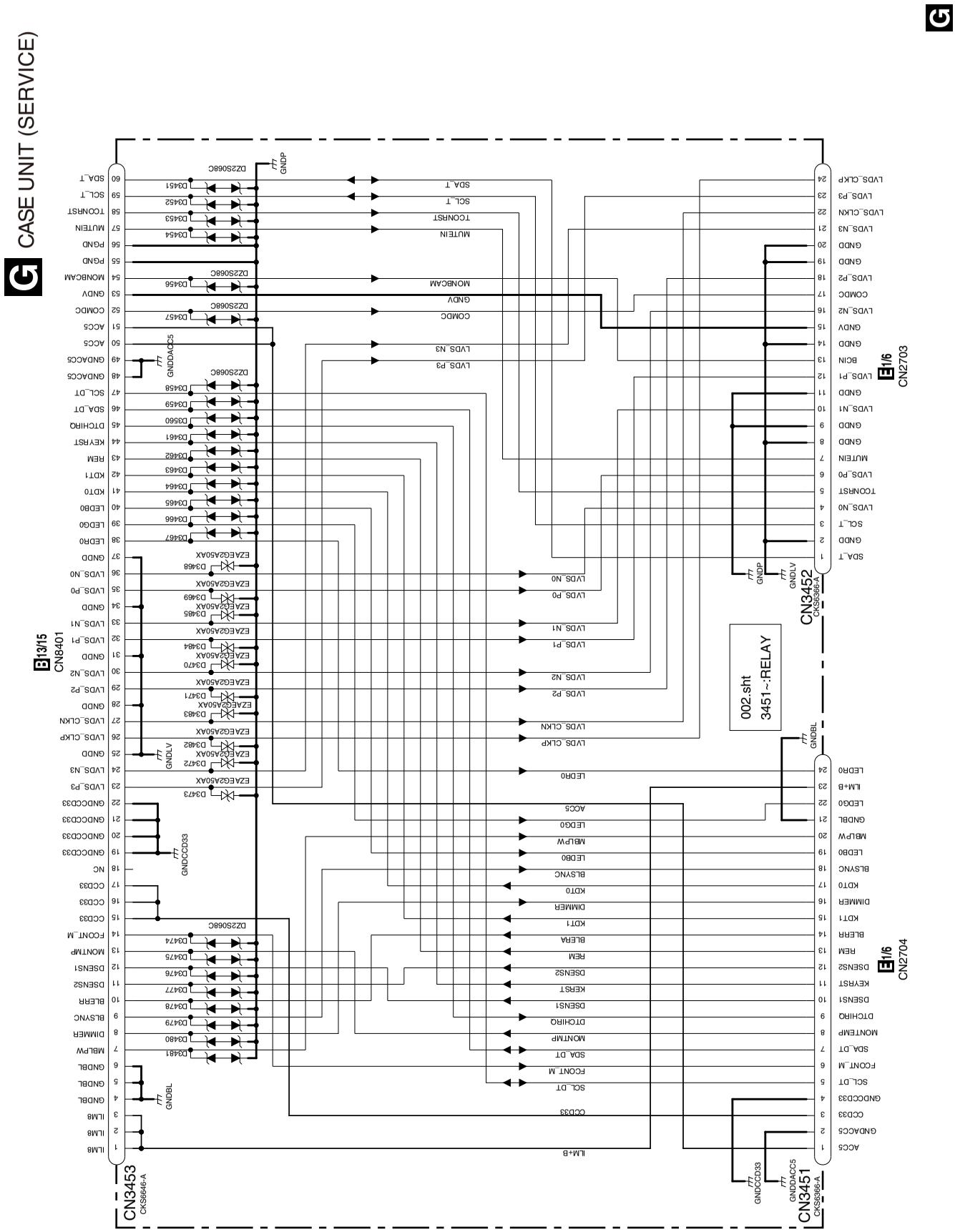
G CASE UNIT (SERVICE)
CN3453
CKS6646-A
CN8401
B13/15
CN3452
CKS6386-A
E1/6
CN2703
CN3451
CKS6386-A
CN2704
002.sht
3451~:RELAY
GNDP
GNDLV
GNDBL
GNDCCD33
GNDDACC5
DZ2S068C
EZAE62A50AX

10.51 SW UNIT (SERVICE)

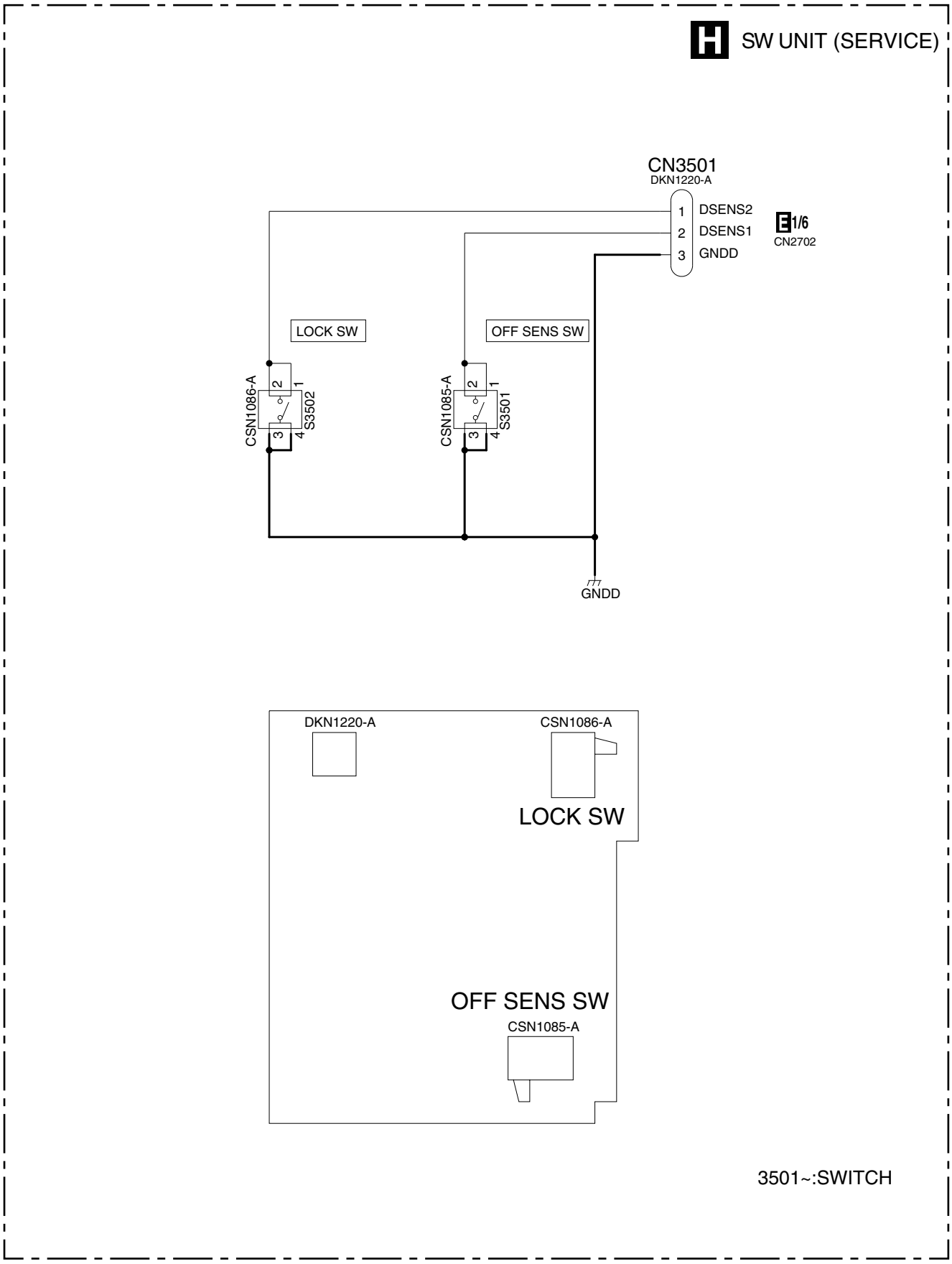

10.52 PCB ASSY (SERVICE)

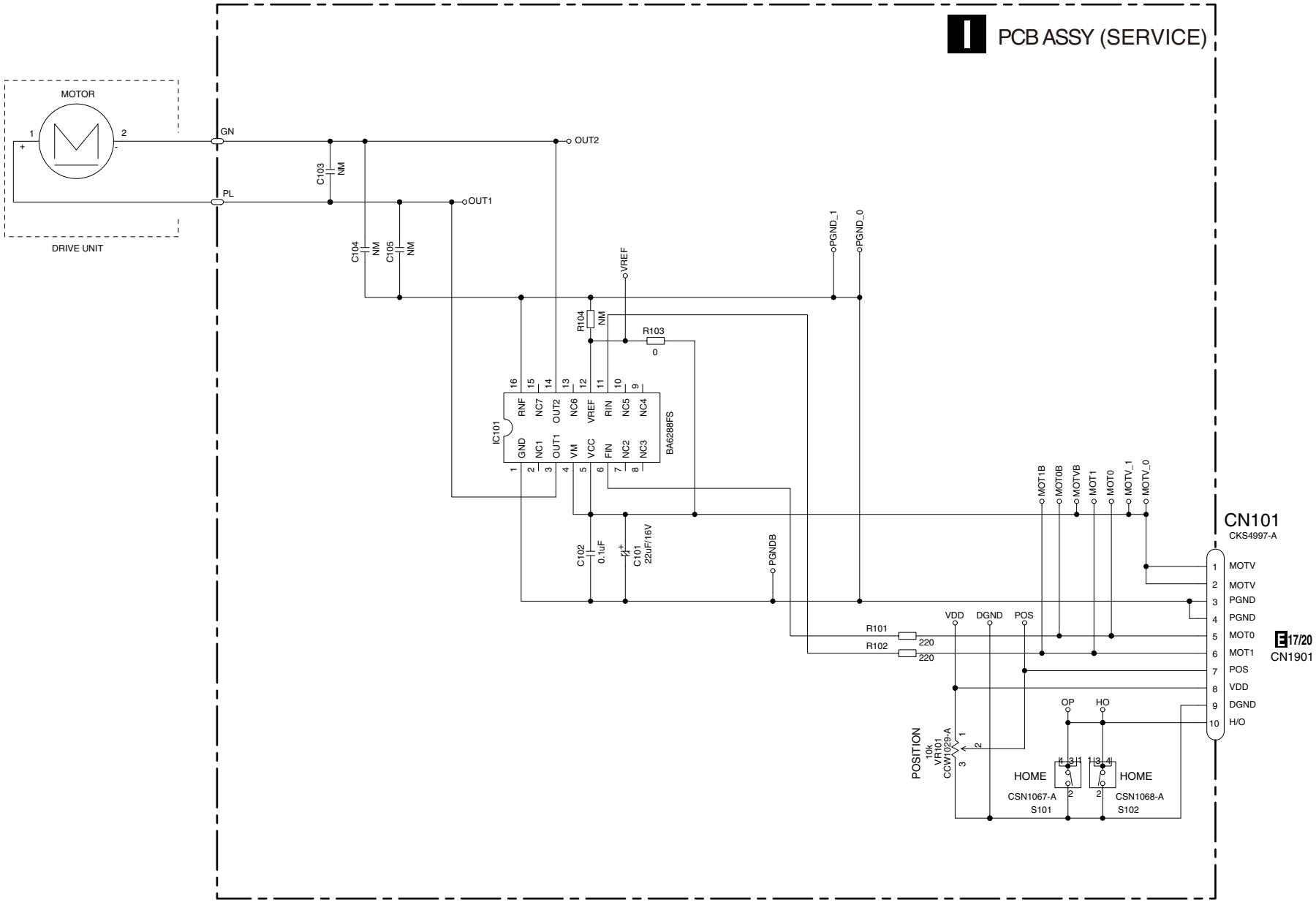

11. PCB CONNECTION DIAGRAM

A AV UNIT

NOTE FOR PCB DIAGRAMS

1. The parts mounted on this PCB include all necessary parts for several destination. For further information for respective destinations, be sure to check with the schematic diagram.
2. Viewpoint of PCB diagrams

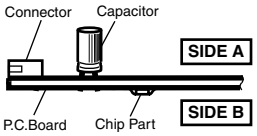

⚠ P301 (A,156,30) Fuse 1.5 A CEK1282
⚠ P2207 (A,94,101) Fuse 3.5 A CEK1343
⚠ P2208 (A,107,89) Fuse 5.0 A CEK1346

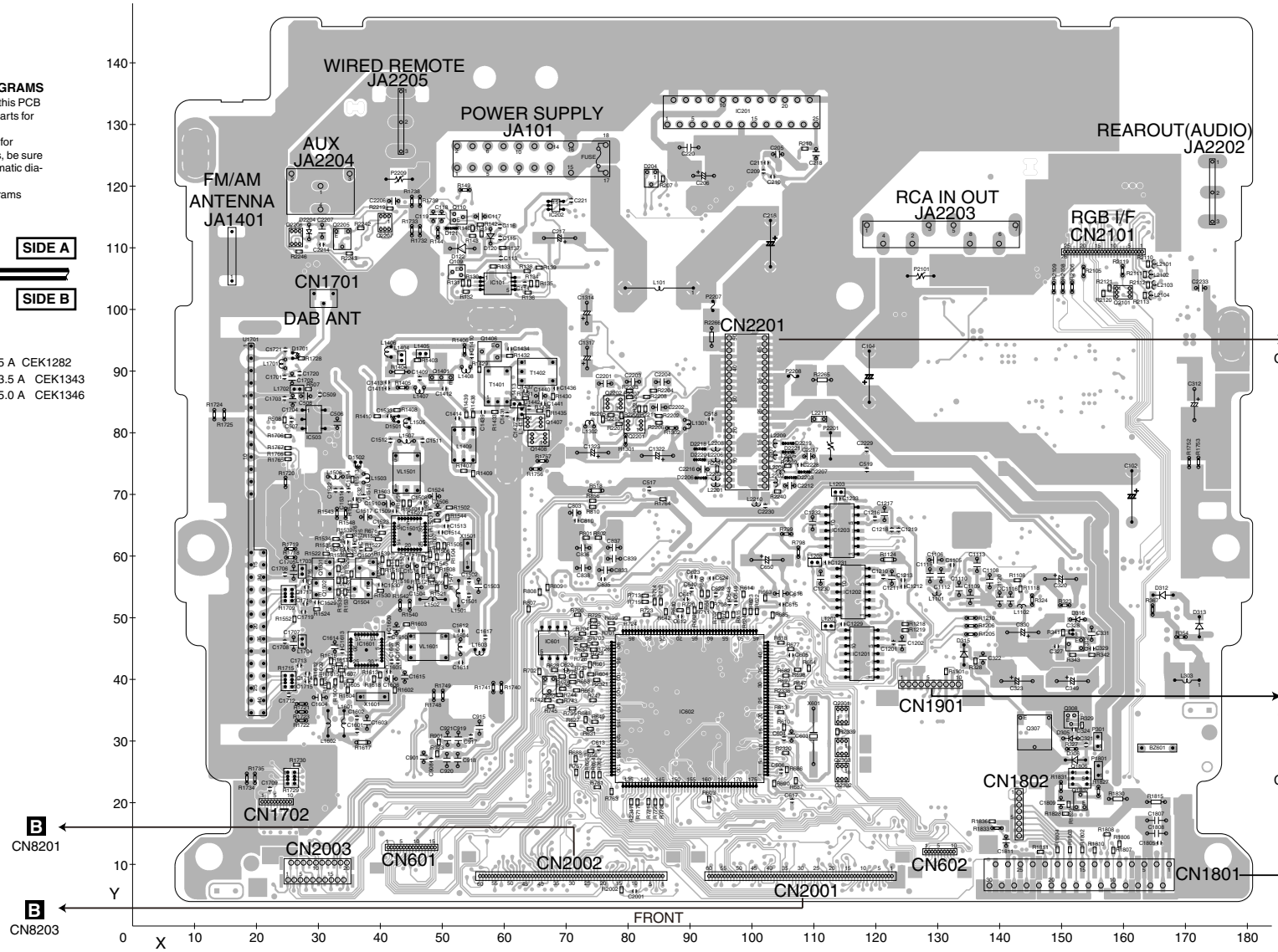

A AV UNIT

SIDE B

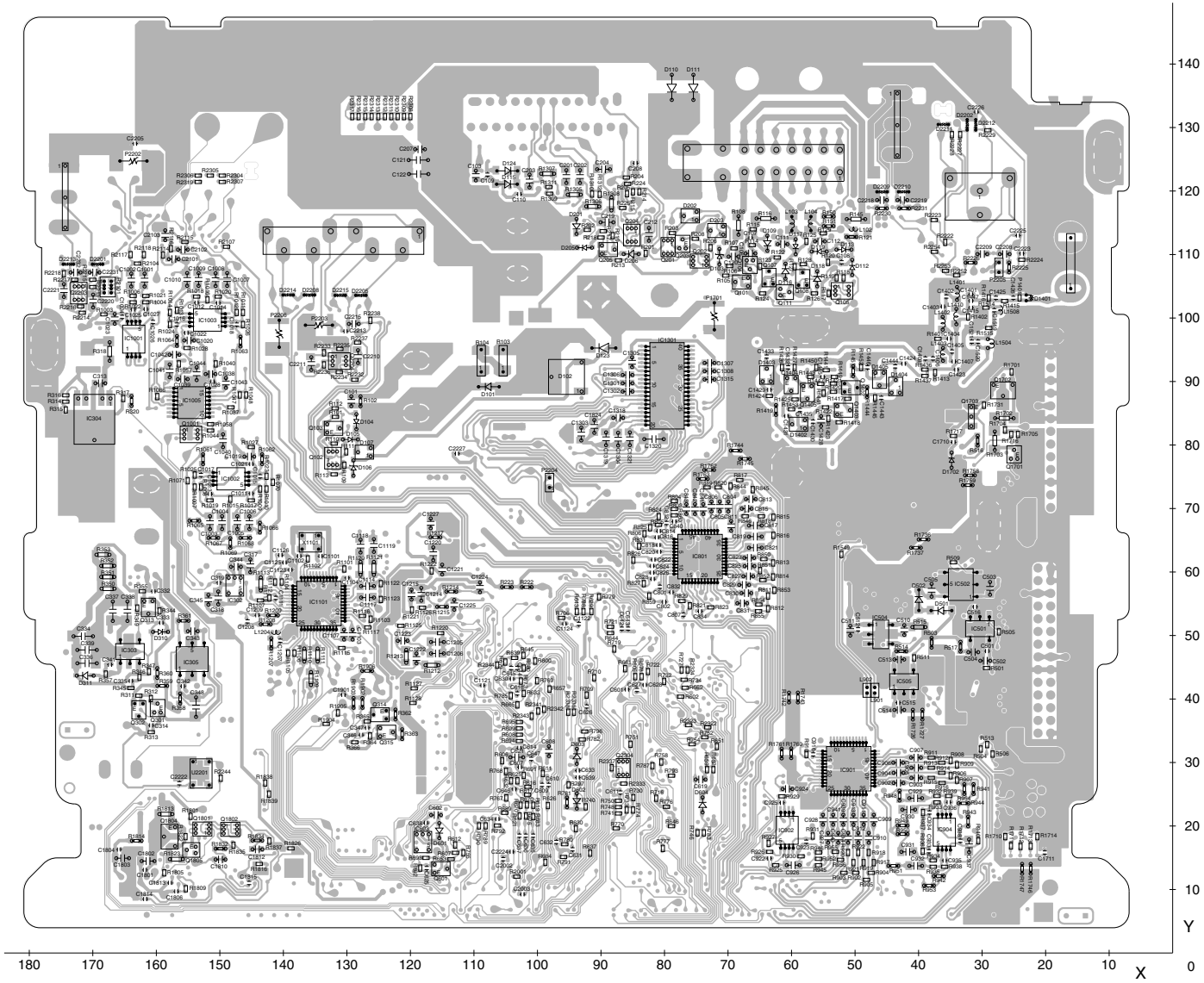

A

A

SIDE A

B IF UNIT (SERVICE)

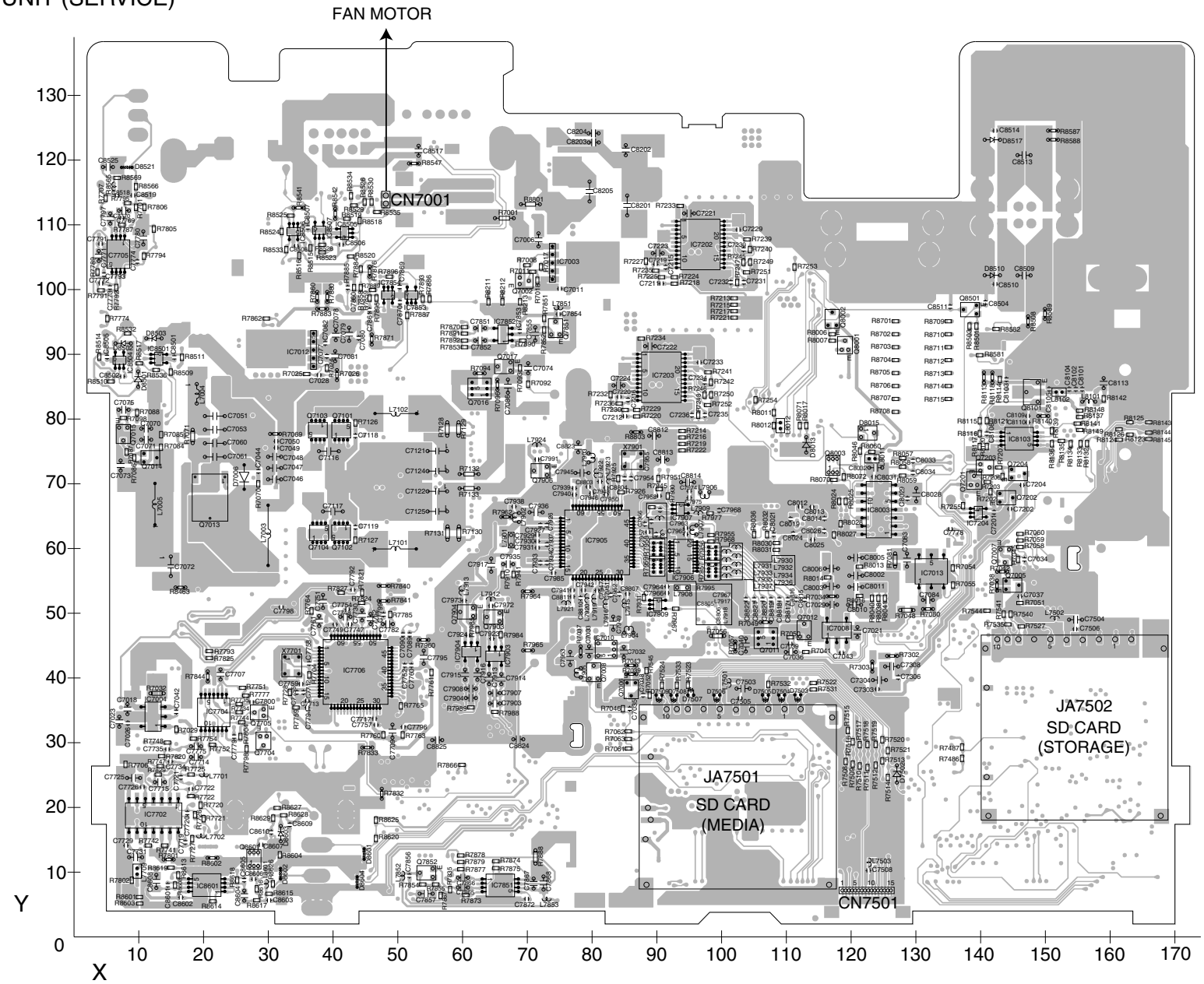

B IF UNIT (SERVICE)

SIDE B

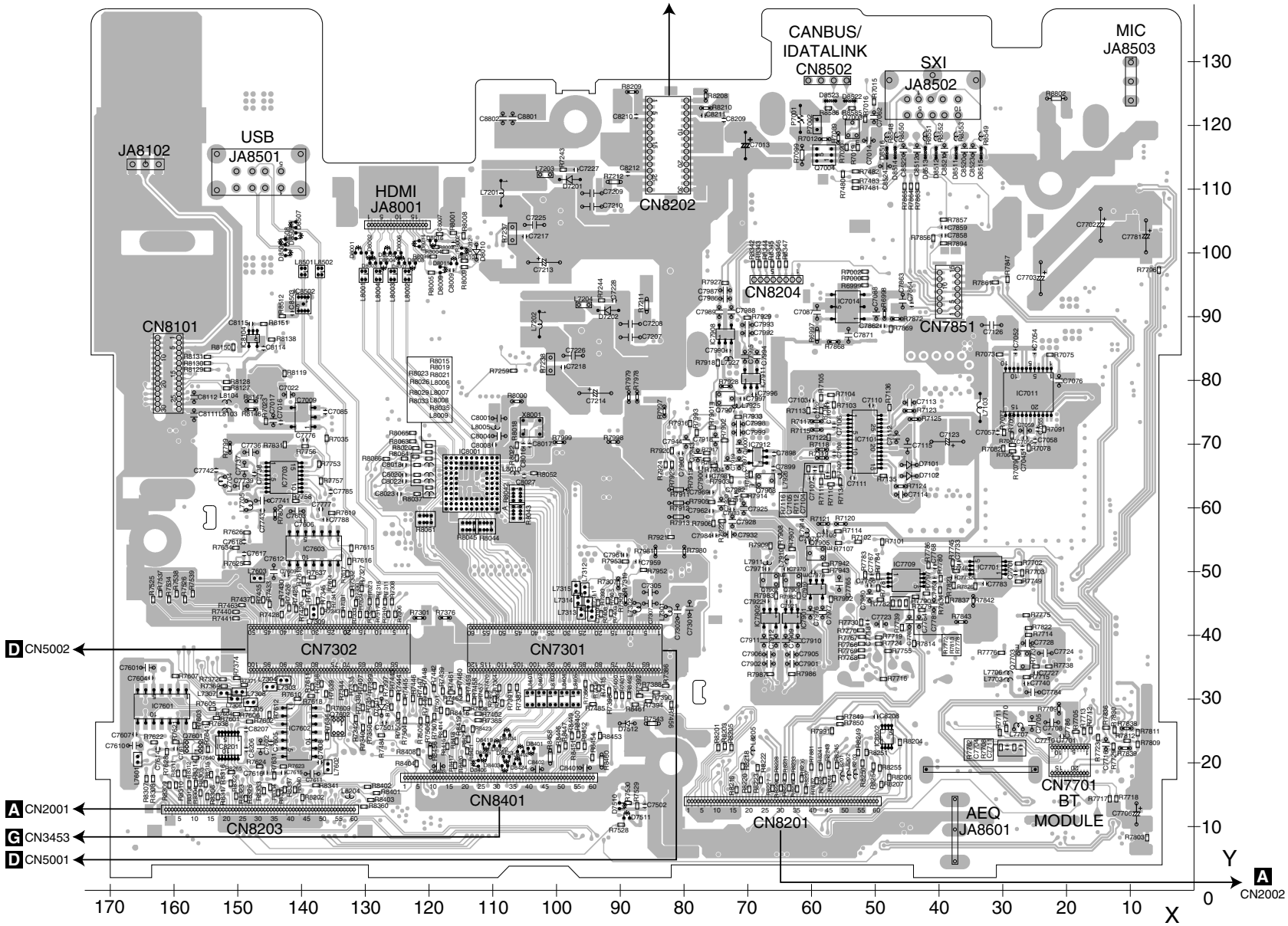

B

11.3 DVD CORE UNIT

C DVD CORE UNIT

SIDE A

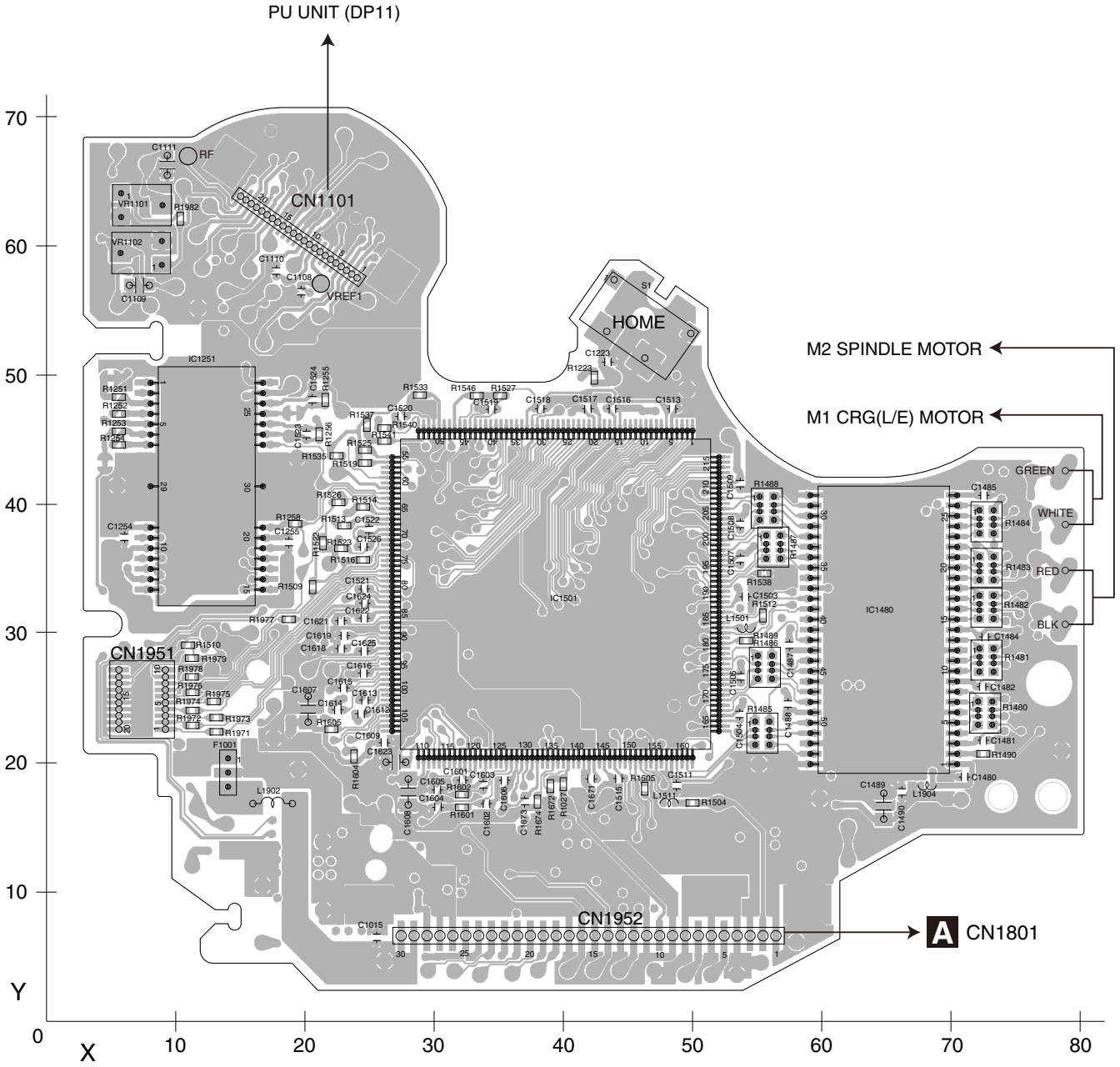

C DVD CORE UNIT

SIDE B

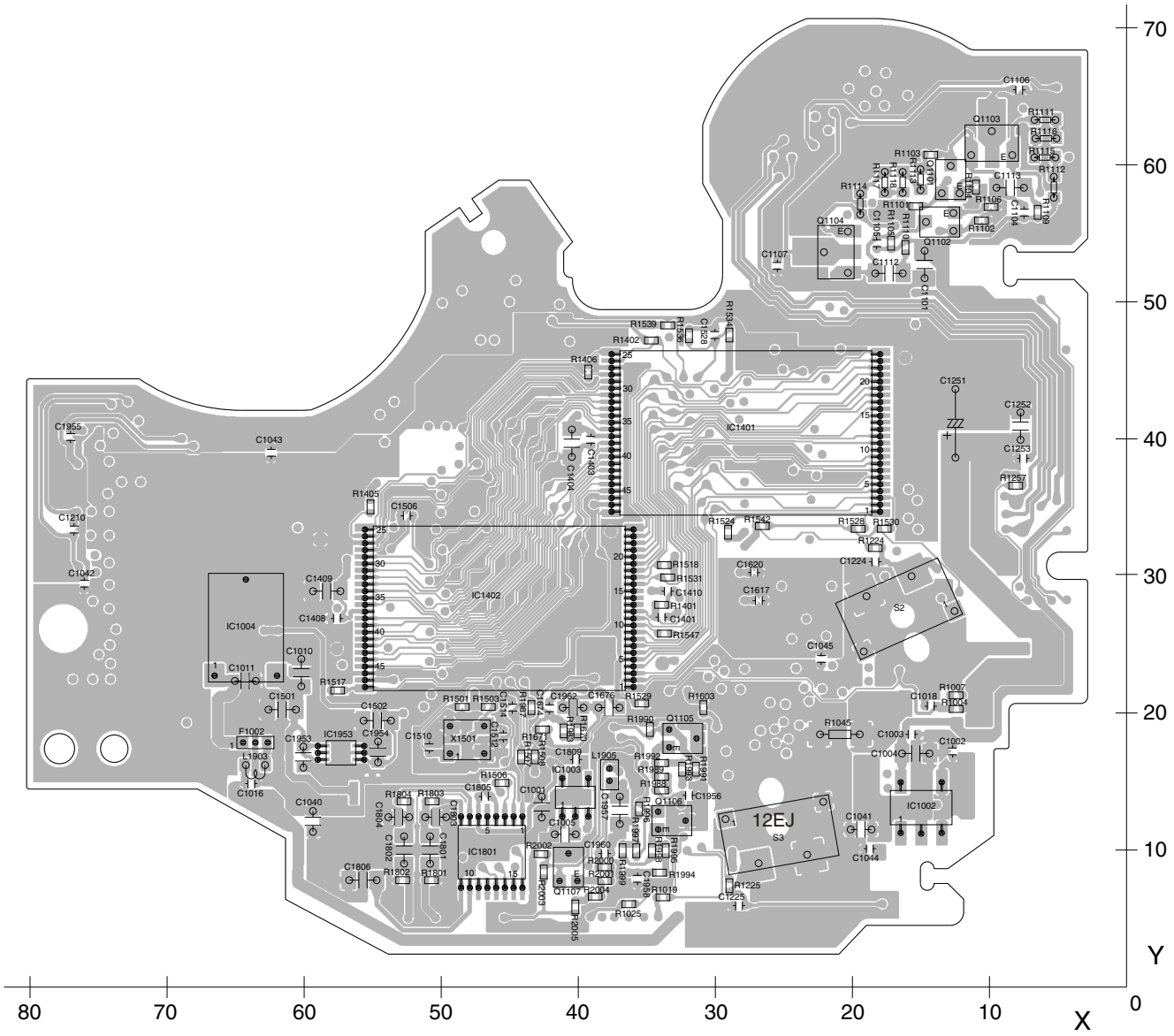

11.4 SOC SINGLE CORE UNIT

D SOC SINGLE CORE UNIT

SIDE A

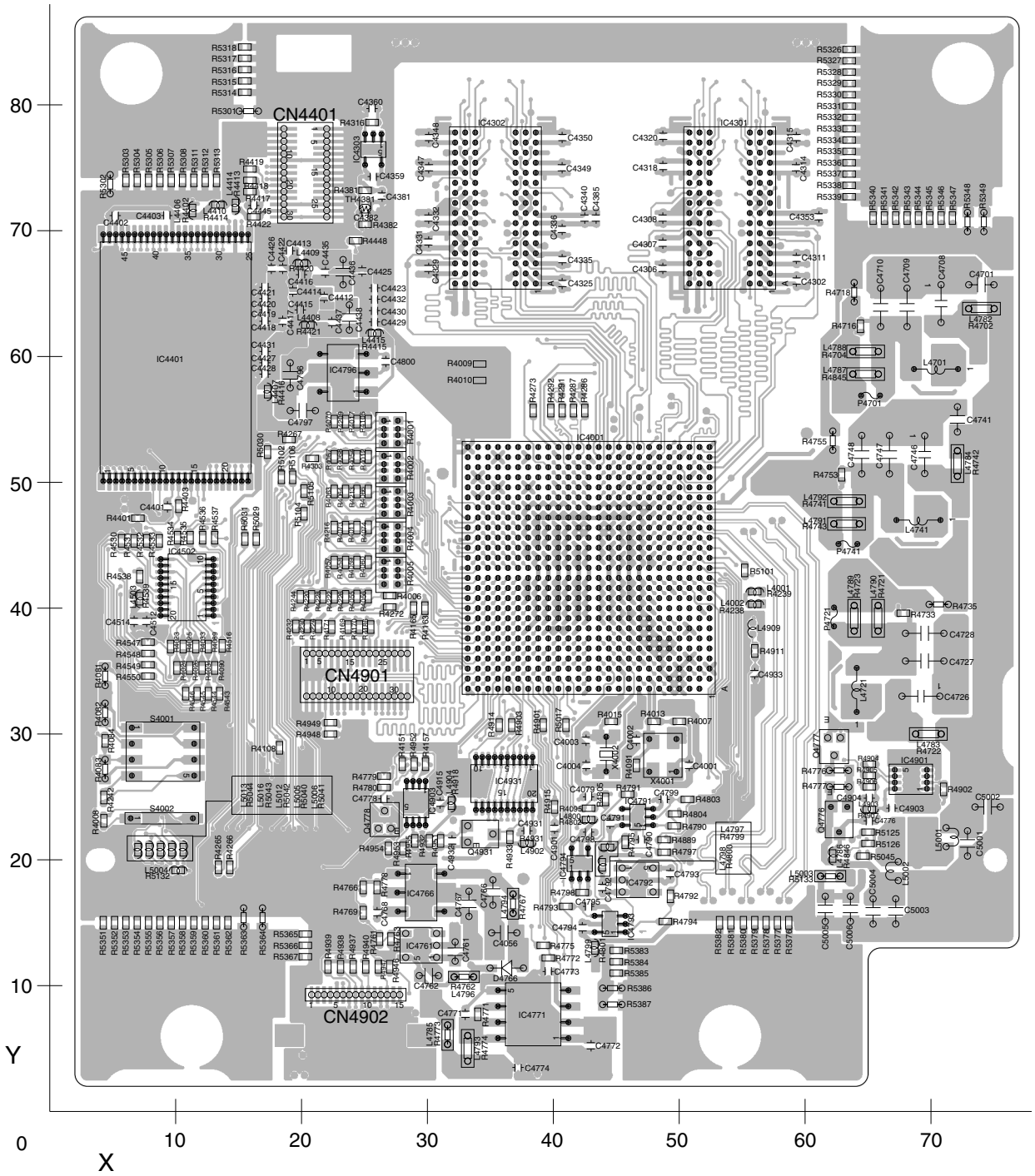

D SOC SINGLE CORE UNIT

SIDE B

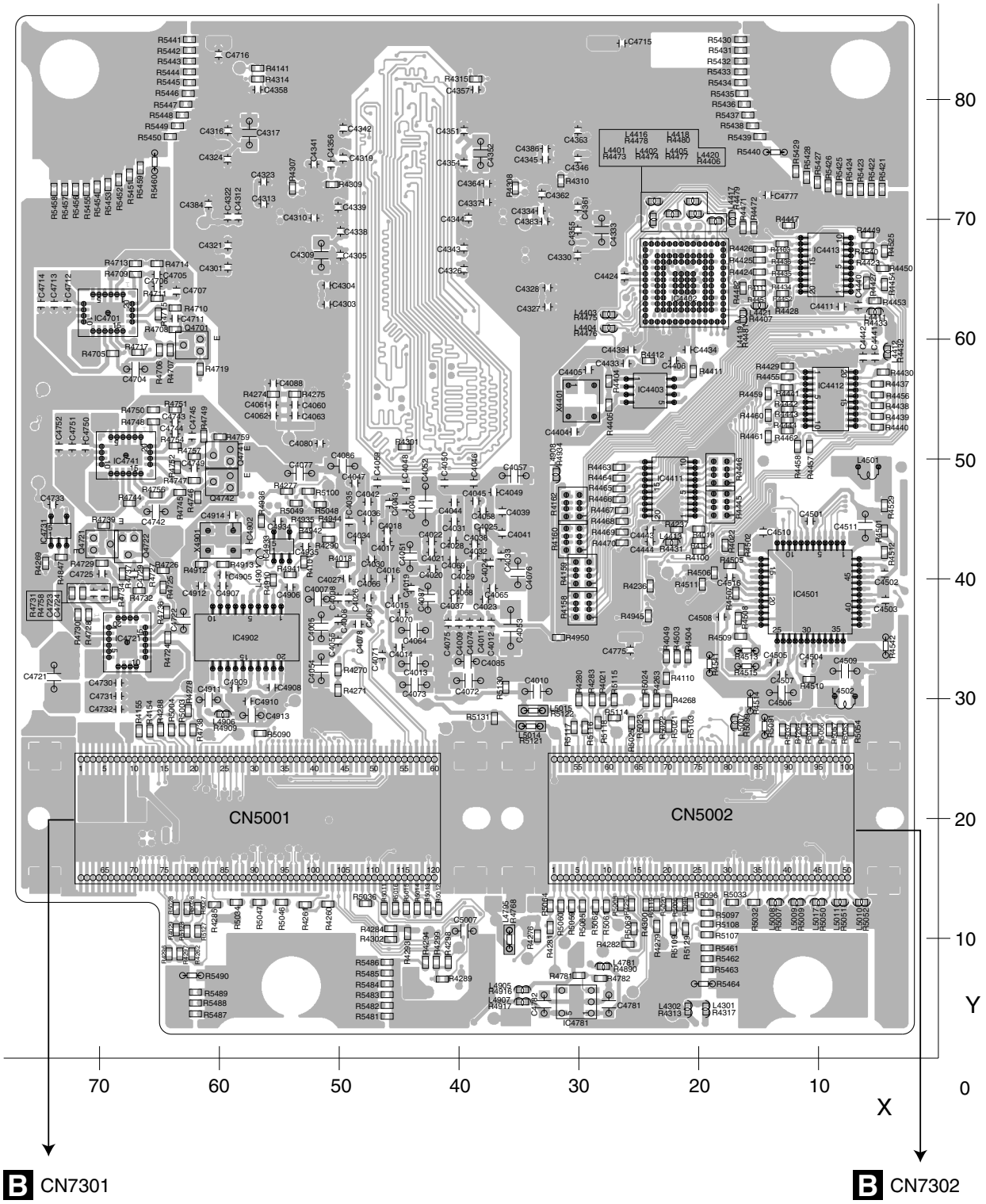

E MONITOR UNIT (SERVICE)

SIDE A

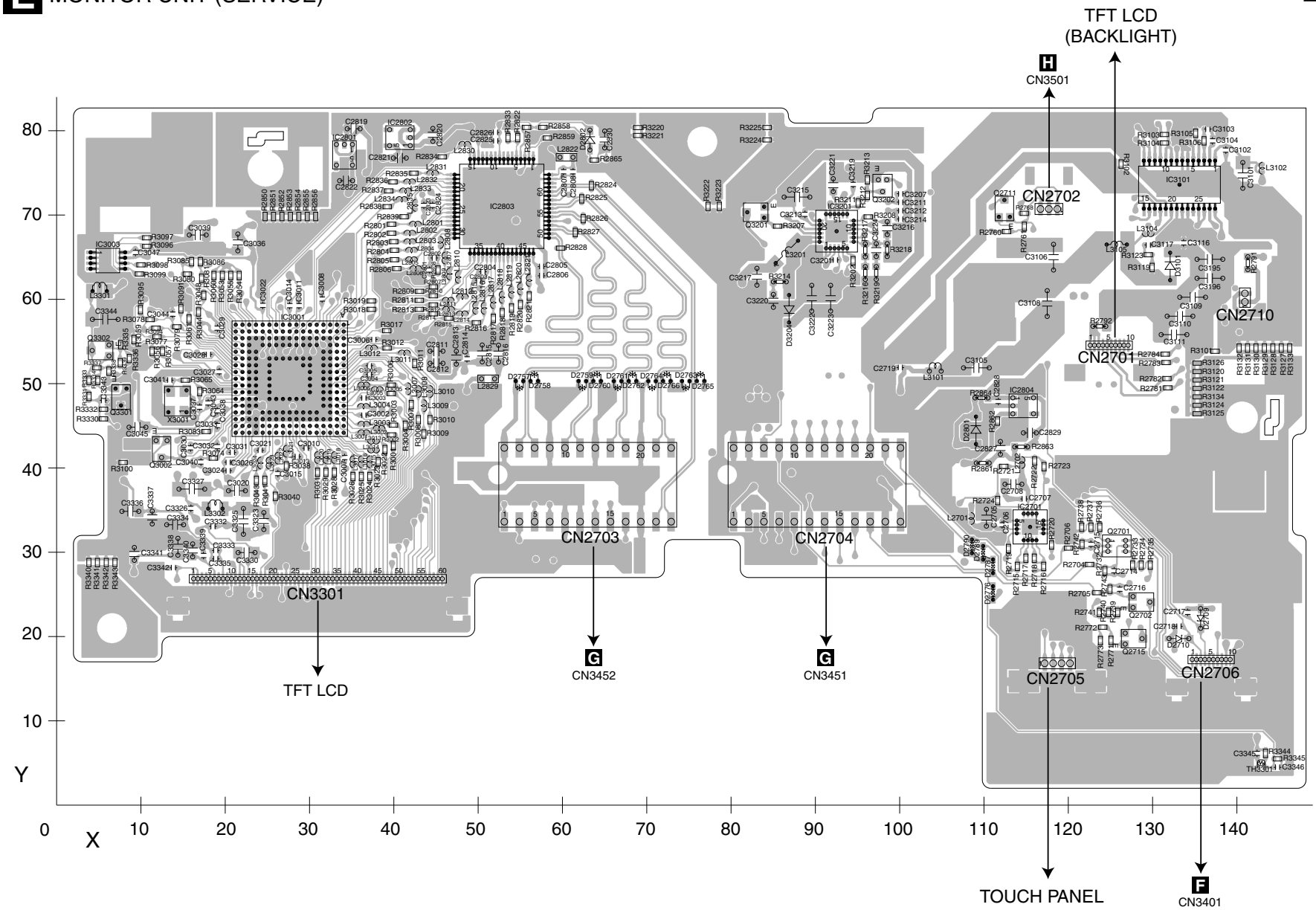

E MONITOR UNIT (SERVICE)

SIDE B

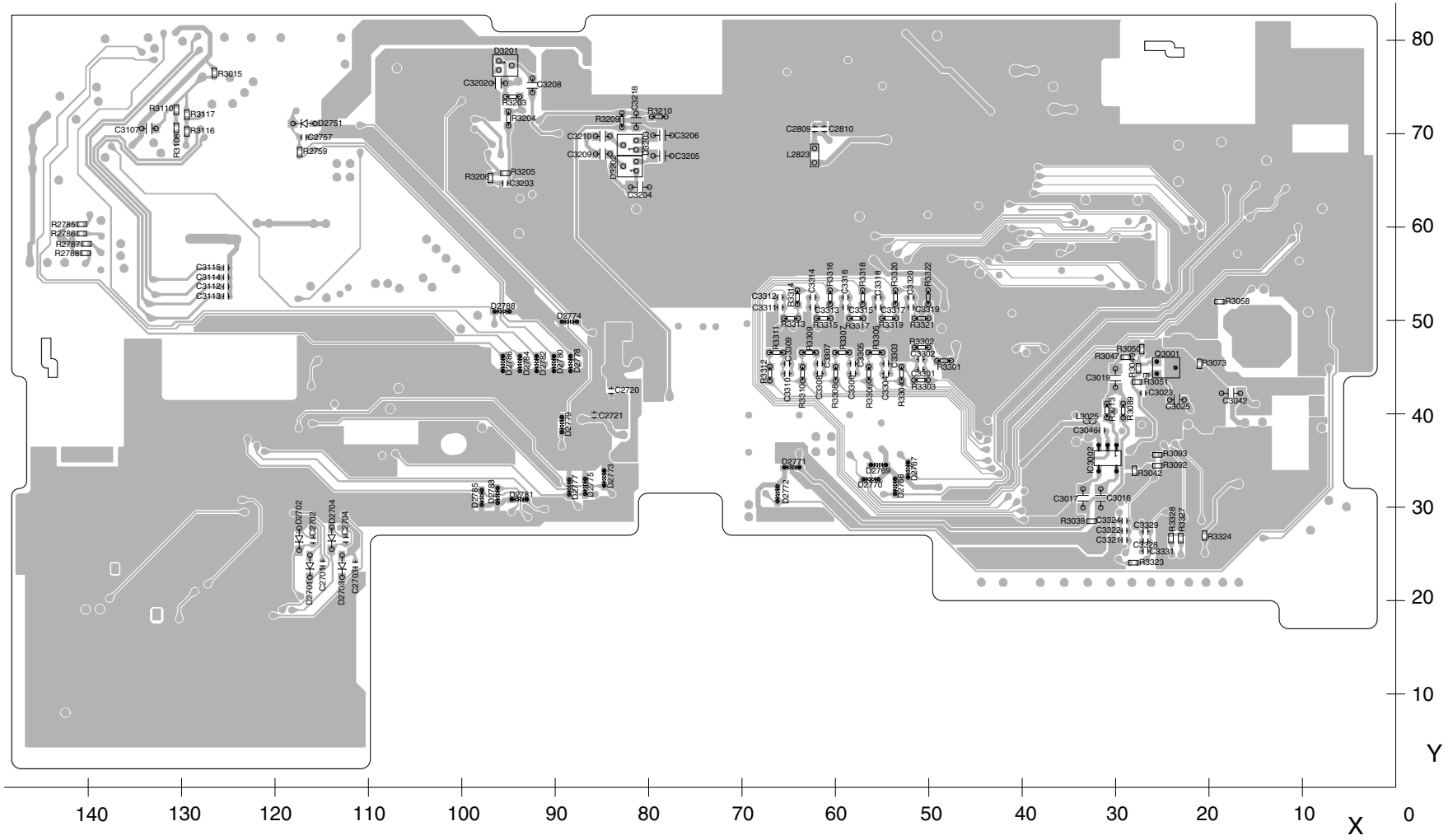

E

E

F KEY UNIT (SERVICE)

SIDE A

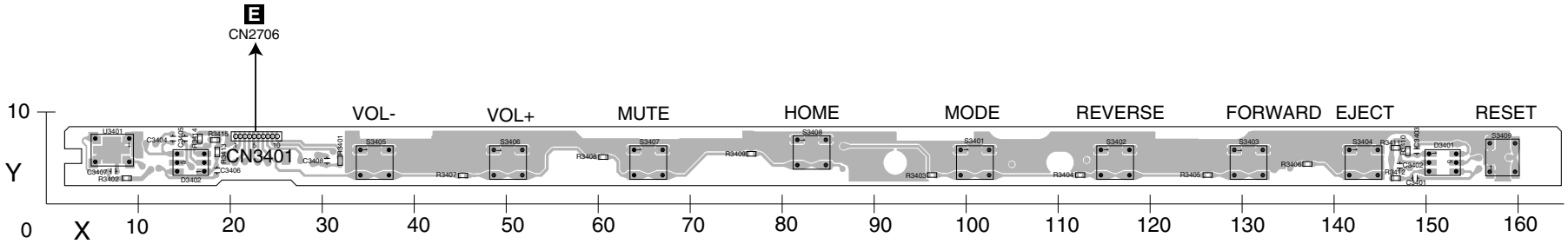

F KEY UNIT (SERVICE)

SIDE B

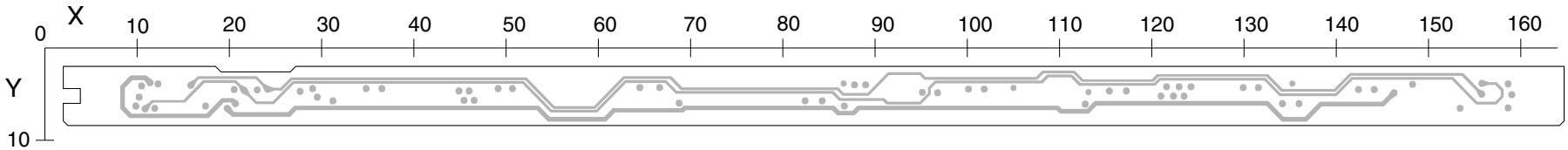

11.7 CASE UNIT (SERVICE)

G CASE UNIT (SERVICE)

SIDE A

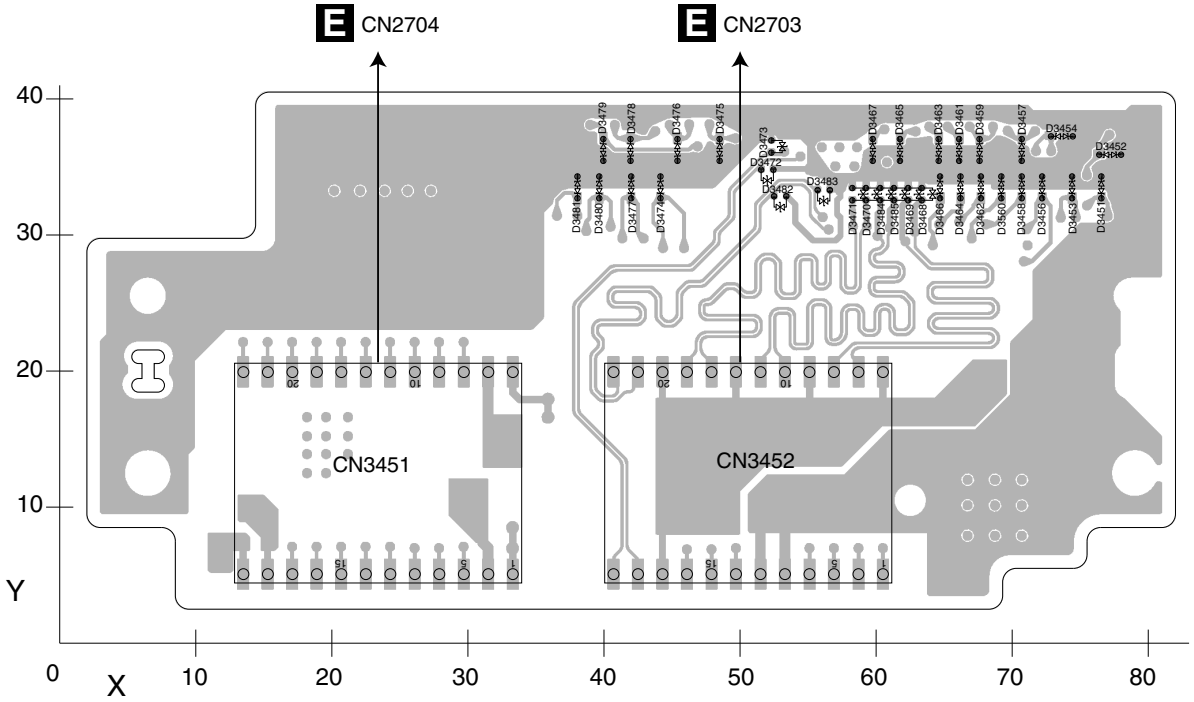

G CASE UNIT (SERVICE)

SIDE B

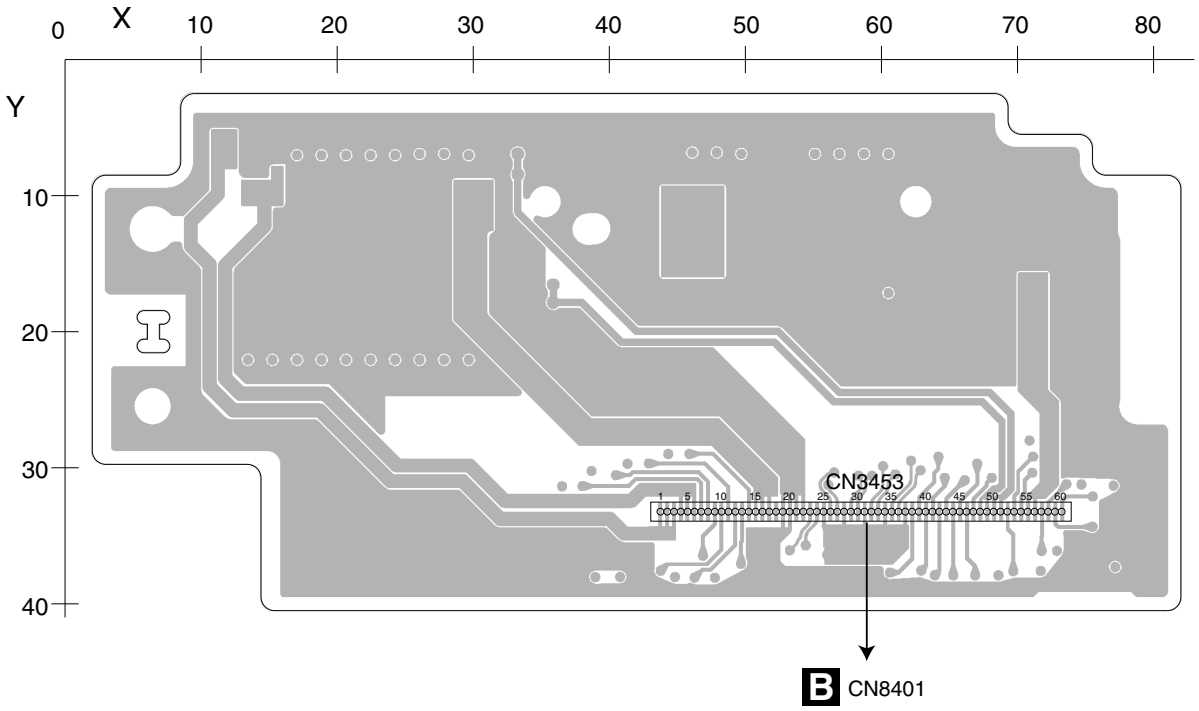

11.8 SW UNIT (SERVICE)

H SW UNIT (SERVICE)

SIDE A

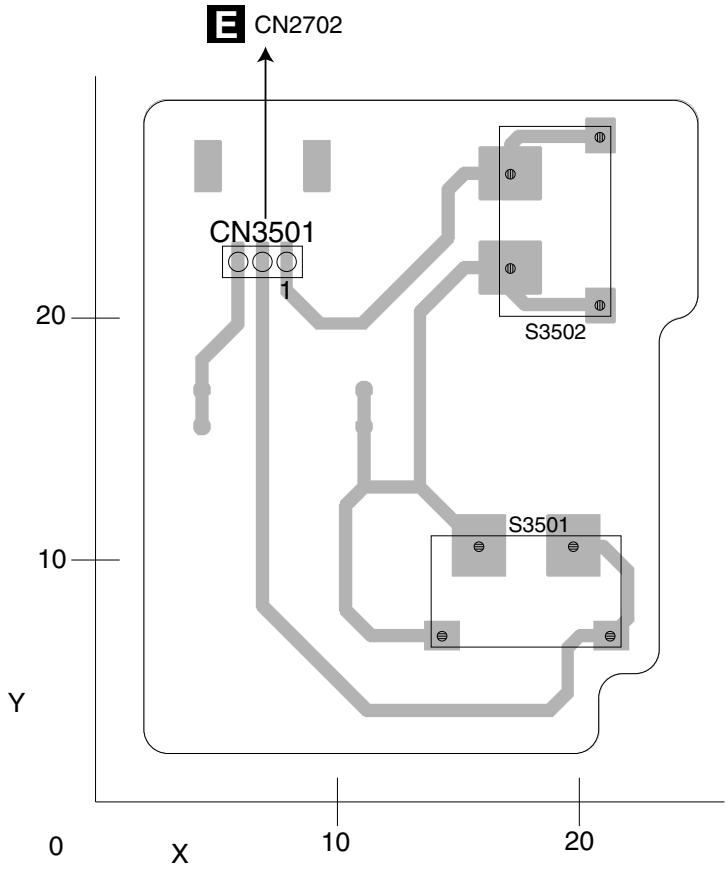

H SW UNIT (SERVICE)

SIDE B

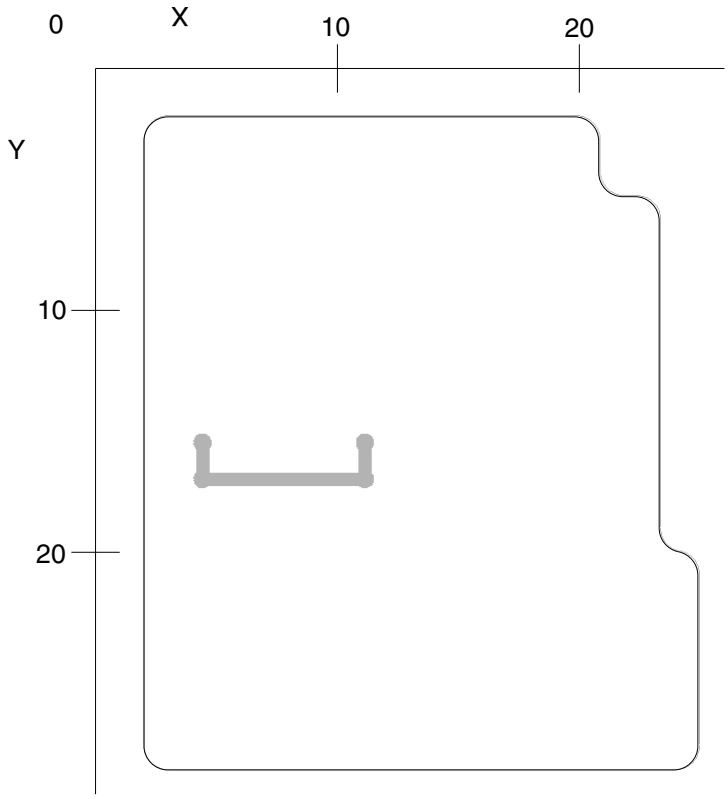

11.9 PCB ASSY (SERVICE)

PCB ASSY (SERVICE)

SIDE A

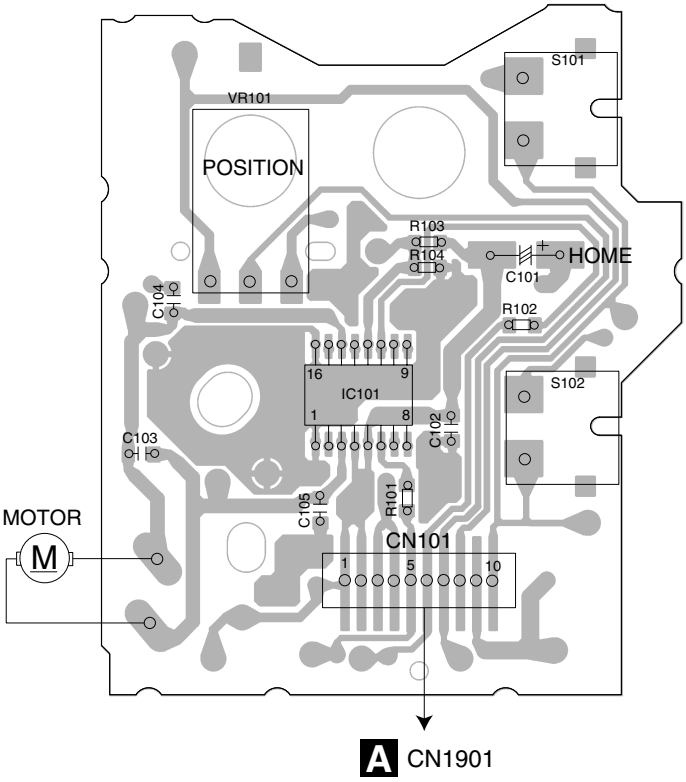

PCB ASSY (SERVICE)

SIDE B

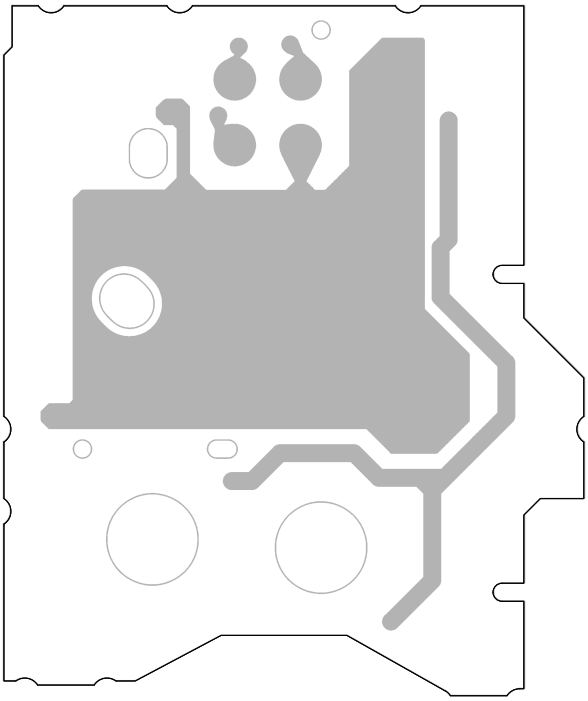

12. ELECTRICAL PARTS LIST

NOTE:

- *Parts whose parts numbers are omitted are subject to being not supplied.*
- *The part numbers shown below indicate chip components.*
  Chip Resistor
  RS1/◯S◯◯◯J,RS1/◯◯S◯◯◯J
  Chip Capacitor (except for CQS.....)
  CKS....., CCS....., CSZS.....
- *Parts marked by " * " are generally unavailable because they are not in our Master Spare Parts List.*
- *The ⚠ mark found on some component parts indicates the importance of the safety factor of the part. Therefore, when replacing, be sure to use parts of identical designation.*
- *Meaning of the figures and others in the parentheses in the parts list.*
  Example) IC 301 is on the point (face A, 91 of x-axis, and 111 of y-axis) of the corresponding PC board.
  IC 301 (A, 91, 111) IC NJM2068V
- *The expression of the unit in this manual is shown by u instead of µ. Please do not make a mistake.*

Circuit Symbol and No. **Part No.**

A:AVH-4200NEX/XNUC

B:AVH-X8800BT/XNEU5

C:AVH-X8800BT/XNUR

D:AVH-X8850BT/XNRC

E:AVH-X8850BT/XNRD

F:AVH-X8850BT/XNRI

G:AVH-X8890BT/XNID

Unit Number : CWN9901(A)
Unit Number : CWN9896(B)
Unit Number : CWN9902(C)
Unit Number : CWN9898(D)
Unit Number : CWN9899(E)
Unit Number : CWN9900(F)
Unit Number : CWN9897(G)
Unit Name : AV Unit

Unit Number : CXX8721(A)
Unit Number : CXX8719(B)
Unit Number : CXX8722(C)
Unit Number : CXX8720(D,E,F,G)
Unit Name : IF Unit(Service)

Unit Number : CWX4717
Unit Name : DVD Core Unit

Unit Number : CWN9904
Unit Name : SOC Single Core Unit

Unit Number : CXX8726
Unit Name : Monitor Unit(Service)

Circuit Symbol and No. **Part No.**

Unit Number : CXX8724
Unit Name : Key Unit(Service)

Unit Number : CXX8729
Unit Name : Case Unit(Service)

Unit Number : CXX8728
Unit Name : SW Unit(Service)

Unit Number : EXX2001
Unit Name : PCB Assy (Service)

A

Unit Number : CWN9901(A)
Unit Number : CWN9896(B)
Unit Number : CWN9902(C)
Unit Number : CWN9898(D)
Unit Number : CWN9899(E)
Unit Number : CWN9900(F)
Unit Number : CWN9897(G)
Unit Name : AV Unit

MISCELLANEOUS

IC 201	(A,98,136)	IC	PA2032A
IC 302	(B,148,58)	Regulator IC	MM3411A33N
IC 303	(B,164,47)	DC/DC CONV IC	NJW4132U2-A
IC 304	(B,170,83)	Regulator	BA00CC0WFP
IC 305	(B,154,46)	Regulator IC	R1516S033B-AE
IC 501	(B,30,51)	Regulator IC(A)	MM3479A33P
IC 502	(B,33,58)	Regulator IC(A)	S-1172B12-E6
IC 504	(B,46,50)	Regulator IC	MM3571A33P
IC 601	(A,68,46)	ROM IC	CAT93C66VI
* IC602	(A,90,35)	Flash Blank UC IC	UPD70F3925AGMA
IC 603	(B,118,17)	Reset IC	PST8229N

Circuit Symbol and No.			Part No.
IC 801	(B,74,62)	IC	AK4223VQ
IC 901	(B,51,29)	IC	AK4223VQ
IC 1001	(B,164,97)	Dual OP-AMP	NJM4565V
IC 1002	(B,148,75)	Dual OP-AMP	NJM4565V
IC 1003	(B,152,100)	Dual OP-AMP	NJM4565V
IC 1005	(B,154,87)	IC	TC4052BFT
IC 1101	(B,134,55)	IC	AK7734XQ
IC 1201	(A,118,44)	CONV IC	WM8761BGED
IC 1202	(A,116,54)	CONV IC	WM8761BGED
IC 1203	(A,115,64)	CONV IC	WM8761BGED
IC 1301	(B,80,89)	IC	PM9012A
IC 1501	(A,45,64)	Tuner IC(A)	TEF6688HN
IC 1501	(A,45,64)	Tuner IC(Except A)	TEF6686HN
Q 101	(B,68,106)	Bipolar TR	LSCR523UB
Q 102	(B,132,78)	Chip Transistor	HN1C01FU
Q 104	(B,67,108)	Resistor Built-IN TR	LTC014EEB
Q 105	(B,52,104)	Chip Transistor	HN1C01FU
Q 107	(B,64,106)	Bipolar TR	LSAR523UB
Q 108	(B,58,106)	Bipolar TR	LSAR523UB
Q 111	(B,61,104)	Resistor Built-IN TR	LTC014EEB
Q 201	(B,79,111)	Transistor	RN4987
Q 202	(B,74,109)	Transistor	RN4987
Q 203	(B,77,112)	Resistor Built-IN TR	LTA024EEB
Q 204	(B,85,113)	Chip Transistor	RN1903
Q 205	(B,89,111)	Bipolar TR	LSCR523UB
Q 301	(B,160,39)	Resistor Built-IN TR	LTC014EEB
Q 302	(B,163,38)	Bipolar TR	LSAR523UB
Q 307	(A,146,29)	Transistor	2SCR573DG
Q 308	(A,152,33)	Resistor Built-IN TR	LTC014EEB
Q 312	(A,152,46)	Bipolar TR	LSCR523UB
Q 314	(B,125,38)	Chip Transistor	2SB1689
Q 315	(B,124,35)	Bipolar TR	LSCR523UB
Q 601	(B,115,13)	Bipolar TR	LSCR523UB
Q 602	(A,67,39)	Bipolar TR	LSCR523UB
Q 1001	(B,155,82)	Chip Transistor	RN1907
Q 1501	(A,31,58)	Bipolar TR(A)	MMBT2369L
Q 1502	(A,31,55)	Bipolar TR(A)	MMBT2369L
Q 1503	(A,38,58)	Bipolar TR(A)	MMBT2369L
Q 1504	(A,37,55)	Bipolar TR(A)	MMBT2369L
Q 1801	(B,153,20)	Chip Transistor	RN4982
Q 1802	(B,148,19)	Chip Transistor	RN1910
Q 1804	(B,159,18)	Transistor	2SB1260
Q 1805	(B,155,16)	Resistor Built-IN TR	LTC014EEB
Q 1806	(A,153,24)	IC	RZQ050P01
Q 1807	(A,153,20)	Bipolar TR	LSCR523UB
Q 2101	(A,160,103)	Transistor	UMF23N
Q 2201	(A,81,81)	Chip Transistor	HN1C03FU
Q 2202	(A,78,85)	Chip Transistor	HN1C03FU
Q 2203	(B,172,104)	Chip Transistor	HN1C03FU
Q 2204	(B,131,93)	Chip Transistor	HN1C03FU
Q 2301	(A,115,34)	Chip Transistor(D,E,F,G)	RN4982
Q 2302	(A,115,25)	Chip Transistor(D,E,F,G)	RN4982
Q 2303	(A,115,29)	Chip Transistor(D,E,F,G)	RN4982
Q 2304	(B,87,29)	Chip Transistor(D,E,F,G)	RN4982
D 103	(B,71,110)	Diode	UDZV6R2(B)
D 105	(B,129,81)	Diode	DZ2J200M0
D 106	(B,129,76)	Diode	UDZV7R5(B)
D 107	(B,127,79)	Rectifier Diode	DAN202UM
D 109	(B,64,112)	Rectifier Diode	DA2J101
D 110	(B,79,136)	Diode	D1F60-5053

Circuit Symbol and No.			Part No.
D 111	(B,75,136)	Diode	D1F60-5053
D 112	(B,50,108)	Diode	DZ2J056M0
D 113	(B,52,111)	Diode	DZ2J180M0
D 116	(B,61,107)	Rectifier Diode	DA2J101
D 118	(B,56,106)	Rectifier Diode	DA2J101
D 123	(B,90,95)	Diode	RB080L-30
D 124	(B,105,123)	Diode	CRG03
D 201	(B,94,114)	Rectifier Diode	DA2J101
D 202	(B,76,116)	Rectifier Diode	DAN202UM
D 203	(B,72,114)	Rectifier Diode	DAN202UM
D 205	(B,93,111)	Diode	DZ2J082M0
D 206	(B,85,110)	Rectifier Diode	DA2J101
D 305	(A,151,30)	Diode	DZ2J062M0
D 311	(B,171,44)	Schottky Diode	RB551VM-30
D 501	(B,36,54)	Diode(A)	CRG03
D 601	(B,115,19)	Rectifier Diode	DA2J101
D 602	(B,94,24)	Schottky Diode	DB2J31400
D 603	(B,94,31)	Schottky Diode	DB2J31400
D 604	(B,74,23)	Schottky Diode(A)	DB2J31400
D 1401	(B,23,103)	Diode	EZAEG2A50AX
D 1501	(A,43,82)	Diode	EZAEG2A50AX
D 1502	(A,36,75)	Diode	EZAEG2A50AX
L 101	(A,85,103)	Choke Coil 600 uH	CTH1221
L 303	(A,170,40)	Choke Coil	CTH1561
L 901	(B,47,41)	Inductor	CTF1786
L 902	(B,48,41)	Inductor	CTF1786
L 1101	(A,130,54)	Ferrite Bead	CTF1528
L 1102	(A,144,52)	Ferrite Bead	CTF1528
L 1201	(A,112,49)	Inductor	CTF1786
L 1202	(A,110,59)	Inductor	CTF1786
L 1203	(A,114,70)	Inductor	CTF1786
L 1204	(B,141,51)	Chip Beads	VTL1132
L 1501	(A,53,54)	Inductor	CTF1749
L 1503	(A,37,73)	Inductor	LCYC150K1608
L 1504	(B,29,96)	Inductor	CTF1389
L 1505	(A,45,82)	Inductor	LCMAR27J1608
L 2202	(A,104,72)	Ferrite Bead	CTF1528
L 2203	(A,94,73)	Ferrite Bead	CTF1528
L 2204	(A,105,74)	Ferrite Bead	CTF1528
L 2205	(A,106,76)	Ferrite Bead	CTF1528
L 2206	(A,94,76)	Ferrite Bead	CTF1528
L 2207	(A,104,76)	Ferrite Bead	CTF1528
L 2208	(A,94,77)	Ferrite Bead	CTF1528
L 2209	(A,104,78)	Ferrite Bead	CTF1528
L 2210	(A,101,68)	Ferrite Bead	CTF1528
L 2211	(A,111,82)	Chip Ferrite Bead	BTX1047
X 601	(A,110,31)	Resonator 3.932 16 MHz	CSS1772
X 1101	(B,136,65)	Resonator 12.288 MHz	CSS1811
X 1501	(A,54,60)	Crystal Resonator 9.216 MHz	CSS1863
⚠P301	(A,156,30)	Fuse 1.5 A	CEK1282
P 1401	(B,24,103)	Surge Absorber	IMSA-6803-01Y900
P 2101	(A,127,105)	Poly Switch	FSMD075-24R
P 2201	(A,113,78)	Poly Switch	FSMD075-24R
P 2202	(B,164,125)	Poly Switch	FSMD075-24R
P 2203	(B,134,99)	Poly Switch	FSMD075-24R
P 2206	(B,141,98)	Poly Switch	FSMD075-24R
⚠P2207	(A,94,101)	Fuse 3.5 A	CEK1343
⚠P2208	(A,107,89)	Fuse 5.0 A	CEK1346
P 2209	(A,43,121)	Poly Switch	FSMD075-24R
BZ601	(A,165,29)	Buzzer	CPV1062

Circuit Symbol and No.		Part No.
CN1801	(A,153,8) Connector	VKN1620
CN1802	(A,145,18) Connector	CKS6007
CN1901	(A,129,35) Connector	CKS6095
CN2001	(A,108,11) Connector	CKS6646
CN2002	(A,71,11) Connector	CKS6646
CN2101	(A,157,116) Connector	CKS4497
CN2201	(A,99,83) Connector	CKS6600
JA101	(A,64,132) Jack	CKM1613
JA1401	(A,16,120) Jack	CKX1104
JA2202	(A,174,119) Jack	CKS6437
JA2203	(A,131,113) Jack	CKB1111
JA2204	(A,30,131) Jack	AKN1073
JA2205	(A,43,130) Jack	CKS6437
VL1501	(A,44,73) Variable Coil	CTC1216

RESISTORS

R 102	(B,128,87)	RS1/10SR224J
R 105	(B,70,107)	RS1/16SS473J
R 106	(B,70,108)	RS1/16SS473J
R 107	(B,69,111)	RS1/16SS432J
R 108	(B,68,115) 1 kohm	CCN1326
R 109	(B,130,77)	RS1/16SS473J
R 110	(B,132,80)	RS1/16SS103J
R 111	(B,130,79)	RS1/16SS103J
R 113	(B,132,75)	RS1/16SS473J
R 114	(B,66,111)	RS1/16SS103J
R 115	(B,66,114)	RS1/16SS472J
R 116	(B,64,116)	RS1/4SA102J
R 117	(B,54,104)	RS1/16SS473J
R 118	(B,52,106)	RS1/16SS473J
R 119	(B,53,106)	RS1/16SS104J
R 120	(B,54,109)	RS1/16SS472J
R 122	(B,62,110)	RS1/16SS102J
R 123	(B,65,108)	RS1/16SS103J
R 124	(B,65,104)	RS1/16SS223J
R 125	(B,58,112)	RS1/16SS103J
R 126	(B,56,104)	RS1/16SS223J
R 127	(B,60,108)	RS1/16SS102J
R 128	(B,58,108)	RS1/16SS103J
R 129	(B,55,113)	RS1/16SS103J
R 145	(B,50,116)	RS1/4SA102J
R 151	(B,54,114)	RS1/10SR0R0J
R 201	(B,83,110)	RS1/16SS683J
R 202	(B,92,114)	RS1/16SS102J
R 205	(B,86,120)	RS1/16SS0R0J
R 207	(A,86,121)	RS1/16SS0R0J
R 210	(A,109,126)	RS1/16SS0R0J
R 213	(B,87,109)	RS1/16SS683J
R 214	(B,84,120)	RS1/16SS152J
R 215	(B,85,120)	RS1/16SS101J
R 217	(B,90,114)	RS1/16SS473J
R 218	(B,90,113)	RS1/16SS104J
R 219	(B,88,113)	RS1/16SS103J
R 223	(B,105,58)	RS1/10SR0R0J
R 224	(B,86,121)	RS1/16SS473J
R 225	(B,87,117)	RS1/16SS101J
R 311	(B,163,41)	RS1/16SS222J
R 312	(B,161,40)	RS1/16SS222J
R 313	(B,161,35)	RS1/16SS473J
R 314	(B,174,87)	RS1/16SS6800D

Circuit Symbol and No.		Part No.
R 315	(B,174,86)	RS1/16SS3901D
R 316	(B,174,88)	RS1/16SS2702D
R 318	(B,167,95)	RS1/4SA0R0J
R 320	(B,164,87)	RS1/10SR0R0J
R 323	(A,151,52)	RS1/10SR102J
R 324	(A,145,53)	RS1/10SR0R0J
R 327	(A,152,29)	RS1/10SR121J
R 328	(A,136,43)	RS1/16SS473J
R 329	(A,153,33)	RS1/16SS220J
R 341	(A,150,48)	RS1/16SS471J
R 342	(A,155,44)	RS1/16SS103J
R 343	(A,152,44)	RS1/16SS682J
R 346	(B,163,43)	RS1/16SS1303D
R 347	(B,161,44)	RS1/16SS1002D
R 354	(A,169,47)	RS1/10SR0R0J
R 355	(B,162,57)	RS1/16SS0R0J
R 358	(B,156,40)	RS1/10SR0R0J
R 359	(B,159,42)	RS1/10SR0R0J
R 361	(B,156,52)	RS1/10SR0R0J
R 362	(B,122,38)	RS1/10SR103J
R 363	(B,121,34)	RS1/10SR331J
R 364	(B,126,34)	RS1/16SS103J
R 365	(B,127,36)	RS1/16SS103J
R 366	(B,129,33)	RS1/16SS103J
R 504	(B,30,32) (Except A)	RS1/16SS102J
R 505	(B,27,51) (A)	RS1/16SS102J
R 509	(B,35,62) (A)	RS1/16SS102J
R 513	(B,29,33) (A)	RS1/16SS102J
R 518	(A,75,71)	RS1/8SQ0R0J
R 604	(A,74,41)	RS1/16SS104J
R 605	(B,85,44)	RS1/16SS121J
R 607	(B,113,16)	RS1/16SS104J
R 608	(B,103,34)	RS1/16SS104J
R 609	(B,103,35)	RS1/16SS104J
R 610	(A,105,32)	RS1/16SS100J
R 611	(B,99,28)	RS1/16SS104J
R 612	(B,113,17)	RS1/16SS102J
R 613	(A,105,35)	RS1/16SS473J
R 614	(A,99,54)	RS1/16SS681J
R 615	(A,97,50)	RS1/16SS681J
R 616	(B,102,26)	RS1/16SS101J
R 617	(B,102,25)	RS1/16SS101J
R 618	(A,105,46)	RS1/16SS473J
R 619	(B,101,23)	RS1/16SS473J
R 620	(B,103,23)	RS1/16SS472J
R 621	(B,103,22)	RS1/16SS471J
R 622	(A,101,51)	RS1/16SS473J
R 623	(A,100,51)	RS1/16SS473J
R 624	(A,99,51)	RS1/16SS473J
R 625	(B,103,27)	RS1/16SS182J
R 630	(B,94,20)	RS1/16SS102J
R 632	(B,104,27)	RS1/16SS182J
R 633	(B,102,41)	RS1/16SS0R0J
R 634	(A,73,46)	RS1/16SS0R0J
R 637	(B,92,16)	RS1/16SS101J
R 639	(B,104,46)	RS1/16SS182J
R 640	(A,88,51)	RS1/16SS0R0J
R 641	(A,93,54)	RS1/16SS101J
R 642	(A,86,51) (A)	RS1/16SS102J
R 645	(B,102,47)	RS1/16SS182J

Circuit Symbol and No.		Part No.
R 646	(B,79,20)	RS1/16SS104J
R 647	(A,108,39)	RS1/16SS473J
R 648	(A,73,33)	RS1/16SS104J
R 651	(B,72,33)	RS1/16SS104J
R 654	(A,74,25)	RS1/16SS101J
R 655	(A,73,25)	RS1/16SS101J
R 656	(A,74,28)	RS1/16SS0R0J
R 657	(B,98,42)	RS1/16SS103J
R 659	(B,73,29)	RS1/16SS104J
R 660	(A,92,54)	RS1/16SS101J
R 663	(A,102,53)	RS1/16SS0R0J
R 664	(A,109,42)	RS1/16SS101J
R 665	(B,103,39)	RS1/16SS471J
R 667	(A,72,38)	RS1/16SS101J
R 670	(B,102,23)	RS1/16SS472J
R 671	(A,96,50)	RS1/16SS681J
R 673	(B,103,43)	RS1/16SS821J
R 675	(B,102,22)	RS1/16SS471J
R 677	(A,106,45)	RS1/16SS0R0J
R 678	(B,84,44)	RS1/16SS121J
R 679	(B,105,46)	RS1/16SS101J
R 680	(B,102,45)	RS1/16SS101J
R 682	(A,106,41)	RS1/16SS680J
R 683	(B,101,21)	RS1/16SS222J
R 684	(B,99,14)	RS1/16SS102J
R 685	(A,103,50)	RS1/16SS102J
R 686	(A,106,25)	RS1/16SS681J
R 689	(B,105,22)	RS1/16SS101J
R 690	(A,104,23)	RS1/16SS0R0J
R 691	(B,102,28)	RS1/16SS0R0J
R 692	(B,118,13)	RS1/16SS224J
R 693	(B,118,15)	RS1/16SS104J
R 694	(B,103,33)	RS1/16SS104J
R 695	(B,103,36)	RS1/16SS104J
R 697	(A,106,39)	RS1/16SS471J
R 698	(A,107,42)	RS1/16SS473J
R 699	(A,77,49)	RS1/16SS102J
R 700	(A,72,50)	RS1/16SS472J
R 701	(A,77,48)	RS1/16SS102J
R 702	(A,66,41)	RS1/16SS473J
R 703	(A,74,48)	RS1/16SS102J
R 704	(A,73,47)	RS1/16SS473J
R 705	(A,74,49)	RS1/16SS473J
R 706	(B,96,53)	RS1/16SS473J
R 707	(A,95,50)	RS1/16SS101J
R 708	(A,94,52)	RS1/16SS681J
R 709	(B,92,41)	RS1/16SS222J
R 710	(B,91,43)	RS1/16SS101J
R 711	(A,92,52)	RS1/16SS101J
R 712	(A,85,53)	RS1/16SS221J
R 713	(A,83,54)	RS1/16SS182J
R 714	(A,84,53)	RS1/16SS221J
R 715	(A,83,53)	RS1/16SS182J
R 716	(B,81,24) (A,E,F,G)	RS1/16SS104J
R 717	(A,82,20) (B,C,D)	RS1/16SS104J
R 722	(B,83,44)	RS1/16SS121J
R 723	(A,83,50) (A)	RS1/16SS104J
R 724	(A,80,50) (A)	RS1/16SS102J
R 725	(A,74,50)	RS1/16SS102J
R 726	(A,74,45)	RS1/16SS471J

Circuit Symbol and No.		Part No.
R 727	(B,77,45)	RS1/16SS104J
R 728	(A,73,44) (A)	RS1/16SS101J
R 729	(A,75,44) (A)	RS1/16SS101J
R 730	(B,85,24) (A,C,F,G)	RS1/16SS104J
R 732	(B,80,43)	RS1/16SS471J
R 733	(B,86,23) (A,D,G)	RS1/16SS104J
R 734	(B,77,43)	RS1/16SS471J
R 737	(A,73,41)	RS1/16SS104J
R 738	(A,69,38)	RS1/16SS104J
R 739	(A,69,40)	RS1/16SS473J
R 740	(B,92,23) (A,B,C)	RS1/16SS103J
R 740	(D,E,F,G)	RS1/16SS1002D
R 741	(B,87,22) (B,C,E,F)	RS1/16SS104J
R 743	(A,69,36)	RS1/16SS222J
R 744	(A,69,37)	RS1/16SS473J
R 746	(B,75,19) (A)	RS1/16SS0R0J
R 748	(B,87,23) (B,D,E)	RS1/16SS104J
R 750	(B,87,24)	RS1/16SS0R0J
R 751	(B,85,33)	RS1/16SS0R0J
R 752	(B,74,34)	RS1/16SS223J
R 754	(B,76,33)	RS1/16SS223J
R 757	(A,72,25)	RS1/16SS101J
R 758	(B,81,30)	RS1/16SS471J
R 761	(A,75,23)	RS1/16SS101J
R 762	(A,75,25)	RS1/16SS101J
R 763	(A,77,22)	RS1/16SS101J
R 767	(B,105,24)	RS1/16SS105J
R 769	(B,100,43)	RS1/16SS104J
R 772	(A,84,20)	RS1/16SS471J
R 773	(A,85,20)	RS1/16SS471J
R 774	(B,85,23)	RS1/16SS104J
R 775	(A,71,40)	RS1/16SS473J
R 776	(B,80,23)	RS1/16SS104J
R 777	(B,80,16)	RS1/16SS101J
R 779	(B,90,56)	RS1/16SS472J
R 782	(B,93,34)	RS1/16SS1002D
R 787	(B,82,29)	RS1/16SS104J
R 789	(B,108,20)	RS1/16SS473J
R 790	(B,109,20)	RS1/16SS473J
R 792	(B,106,20)	RS1/16SS103J
R 793	(B,79,28)	RS1/16SS104J
R 796	(B,93,35)	RS1/16SS1001D
R 797	(B,95,26) (A,B,C)	RS1/16SS102J
R 797	(D,E,F,G)	RS1/16SS1001D
R 798	(A,108,61)	RS1/10SR0R0J
R 800	(B,100,46)	RS1/16SS101J
R 801	(A,73,63)	RS1/16SS0R0J
R 802	(A,75,63)	RS1/16SS0R0J
R 803	(B,78,70)	RS1/16SS101J
R 804	(B,78,71)	RS1/16SS101J
R 805	(B,81,67)	RS1/16SS101J
R 806	(B,83,66)	RS1/16SS101J
R 811	(B,64,56)	RS1/16SS223J
R 812	(B,64,54)	RS1/16SS223J
R 813	(B,63,61)	RS1/16SS223J
R 814	(B,63,59)	RS1/16SS223J
R 817	(B,68,74)	RS1/16SS223J
R 818	(B,65,69)	RS1/16SS223J
R 821	(B,76,55) (Except A)	RS1/16SS470J
R 823	(B,73,54)	RS1/16SS104J

Circuit Symbol and No.		Part No.
R 824	(B,81,69)	RS1/16SS75R0D
R 825	(B,82,67)	RS1/16SS75R0D
R 827	(B,83,58)	RS1/16SS2200D
R 829	(B,77,55)	RS1/16SS750J
R 831	(B,84,64)	RS1/16SS104J
R 844	(B,70,74)	RS1/16SS101J
R 845	(B,66,73)	RS1/16SS101J
R 846	(B,67,69)	RS1/16SS101J
R 850	(B,64,62)	RS1/16SS101J
R 851	(B,65,60)	RS1/16SS101J
R 852	(B,65,59)	RS1/16SS101J
R 853	(B,63,57)	RS1/16SS101J
R 854	(B,65,55)	RS1/16SS101J
R 855	(B,65,54)	RS1/16SS101J
R 859	(B,82,56)	RS1/16SS75R0D
R 901	(A,49,30)	RS1/16SS0R0J
R 910	(B,58,31)	RS1/16SS104J
R 920	(B,51,16) (A)	RS1/16SS101J
R 921	(B,50,14) (A)	RS1/16SS101J
R 922	(B,50,16) (A)	RS1/16SS101J
R 923	(A,49,28)	RS1/16SS0R0J
R 944	(B,33,24)	RS1/10SR0R0J
R 945	(B,56,14)	RS1/16SS0R0J
R 946	(B,56,16)	RS1/16SS0R0J
R 953	(B,38,11)	RS1/10SR0R0J
R 954	(B,33,26)	RS1/10SR0R0J
R 1003	(B,168,101)	RS1/16SS0R0J
R 1004	(B,162,102)	RS1/16SS153J
R 1006	(B,164,103)	RS1/16SS153J
R 1007	(B,154,73)	RS1/16SS473J
R 1008	(B,153,73)	RS1/16SS473J
R 1009	(B,144,73)	RS1/16SS473J
R 1010	(B,143,73)	RS1/16SS473J
R 1011	(B,146,101)	RS1/16SS473J
R 1012	(B,147,101)	RS1/16SS473J
R 1013	(B,157,101)	RS1/16SS473J
R 1014	(B,158,101)	RS1/16SS473J
R 1015	(B,148,71)	RS1/16SS0R0J
R 1016	(B,152,103)	RS1/16SS0R0J
R 1017	(B,145,71)	RS1/16SS473J
R 1018	(B,154,103)	RS1/16SS473J
R 1019	(B,152,71)	RS1/16SS473J
R 1020	(B,150,103)	RS1/16SS473J
R 1021	(B,162,103)	RS1/16SS153J
R 1022	(B,164,102)	RS1/16SS153J
R 1023	(B,143,75)	RS1/16SS473J
R 1024	(B,158,99)	RS1/16SS473J
R 1025	(B,154,75)	RS1/16SS473J
R 1026	(B,146,99)	RS1/16SS473J
R 1027	(B,145,80)	RS1/16SS0R0J
R 1028	(B,155,95)	RS1/16SS0R0J
R 1040	(B,151,93)	RS1/16SS0R0J
R 1044	(B,151,82)	RS1/16SS473J
R 1047	(B,147,88)	RS1/16SS473J
R 1048	(B,146,88)	RS1/16SS473J
R 1057	(B,156,93)	RS1/16SS0R0J
R 1058	(B,151,83)	RS1/16SS473J
R 1061	(B,153,78)	RS1/10SR0R0J
R 1062	(B,143,78)	RS1/10SR0R0J
R 1063	(B,147,96)	RS1/10SR0R0J

Circuit Symbol and No.		Part No.
R 1064	(B,157,96)	RS1/10SR0R0J
R 1065	(B,154,68)	RS1/10SR0R0J
R 1066	(B,144,67)	RS1/10SR0R0J
R 1067	(B,151,65)	RS1/10SR0R0J
R 1068	(B,146,65)	RS1/10SR0R0J
R 1101	(B,130,60)	RS1/16SS473J
R 1102	(B,136,62)	RS1/16SS222J
R 1103	(B,126,53)	RS1/16SS473J
R 1104	(B,140,58)	RS1/16SS220J
R 1105	(B,139,47)	RS1/16SS101J
R 1106	(B,138,47)	RS1/16SS470J
R 1107	(B,144,56)	RS1/16SS101J
R 1109	(B,136,43)	RS1/8SQ102J
R 1110	(B,137,47)	RS1/8SQ102J
R 1111	(B,135,47)	RS1/8SQ102J
R 1112	(B,141,58)	RS1/16SS220J
R 1113	(B,144,58)	RS1/8SQ220J
R 1115	(B,131,48)	RS1/16SS0R0J
R 1119	(B,142,56)	RS1/16SS104J
R 1120	(B,128,61)	RS1/8SQ222J
R 1121	(B,126,61)	RS1/8SQ222J
R 1122	(B,125,58)	RS1/16SS472J
R 1123	(B,125,56)	RS1/16SS472J
R 1124	(A,122,59)	RS1/8SQ0R0J
R 1205	(A,135,47)	RS1/10SR470J
R 1206	(A,135,49)	RS1/10SR470J
R 1207	(B,142,49)	RS1/10SR820J
R 1208	(B,143,52)	RS1/10SR470J
R 1209	(B,142,53)	RS1/10SR470J
R 1210	(A,135,50)	RS1/10SR470J
R 1212	(B,117,45)	RS1/8SQ821J
R 1213	(B,121,47)	RS1/8SQ821J
R 1214	(B,114,57)	RS1/10SR821J
R 1215	(B,115,55)	RS1/10SR821J
R 1217	(B,116,65)	RS1/10SR821J
R 1218	(A,125,49)	RS1/16SS0R0J
R 1219	(A,125,48)	RS1/16SS0R0J
R 1220	(B,115,50)	RS1/16SS0R0J
R 1221	(B,120,54)	RS1/16SS0R0J
R 1222	(B,117,60)	RS1/16SS0R0J
R 1301	(A,80,79)	RS1/10SR0R0J
R 1305	(B,94,119)	RS1/8SQ362J
R 1306	(B,91,118)	RS1/8SQ362J
R 1307	(B,98,123)	RS1/8SQ362J
R 1308	(B,88,118)	RS1/8SQ362J
R 1309	(B,98,120)	RS1/16SS562J
R 1310	(B,91,120)	RS1/16SS562J
R 1311	(B,98,121)	RS1/16SS562J
R 1312	(B,90,119)	RS1/16SS562J
R 1402	(B,32,100)	RS1/16SS0R0J
R 1410	(A,40,83)	RS1/16SS0R0J
R 1413	(B,37,91)	RS1/16SS0R0J
R 1415	(B,26,103)	RS1/16SS0R0J
R 1502	(A,51,68)	RS1/16SS0R0J
R 1503	(A,40,70)	RS1/16SS0R0J
R 1505	(A,50,62)	RS1/16SS103J
R 1507	(A,49,62)	RS1/16SS103J
R 1508	(A,49,58)	RS1/16SS472J
R 1509	(A,48,56)	RS1/16SS472J
R 1510	(A,48,60)	RS1/16SS101J

Circuit Symbol and No.		Part No.
R 1511	(A,47,60)	RS1/16SS101J
R 1512	(A,46,57)	RS1/16SS0R0J
R 1513	(A,36,72)	RS1/16SS391J
R 1514	(B,29,102)	RS1/16SS105J
R 1515	(B,29,98)	RS1/16SS105J
R 1516	(A,43,57) (A)	RS1/16SS0R0J
R 1517	(A,43,59) (A)	RS1/16SS0R0J
R 1518	(A,42,57) (A)	RS1/16SS0R0J
R 1519	(A,41,59) (A)	RS1/16SS0R0J
R 1520	(A,49,66)	RS1/16SS0R0J
R 1522	(A,31,60) (A)	RS1/16SS182J
R 1523	(A,33,58) (A)	RS1/16SS332J
R 1524	(A,30,51) (A)	RS1/16SS121J
R 1525	(A,33,56) (A)	RS1/16SS102J
R 1526	(A,40,63) (A)	RS1/16SS0R0J
R 1527	(A,38,61) (A)	RS1/16SS0R0J
R 1528	(A,40,57) (A)	RS1/16SS182J
R 1529	(A,35,57) (A)	RS1/16SS332J
R 1530	(A,40,54) (A)	RS1/16SS121J
R 1531	(A,34,56) (A)	RS1/16SS102J
R 1532	(A,35,63) (A)	RS1/16SS0R0J
R 1533	(A,35,60) (A)	RS1/16SS0R0J
R 1534	(A,33,63) (A)	RS1/16SS0R0J
R 1535	(A,33,62) (A)	RS1/16SS0R0J
R 1536	(A,33,54) (A)	RS1/16SS0R0J
R 1537	(A,34,54) (A)	RS1/16SS0R0J
R 1538	(A,34,59) (A)	RS1/16SS0R0J
R 1539	(A,40,59) (A)	RS1/16SS0R0J
R 1540	(A,45,52)	RS1/10SR0R0J
R 1542	(A,43,52)	RS1/10SR0R0J
R 1543	(A,33,67)	RS1/10SR0R0J
R 1545	(A,48,58)	RS1/16SS0R0J
R 1546	(A,47,58)	RS1/16SS0R0J
R 1547	(A,51,56)	RS1/8SQ0R0J
R 1548	(A,34,67)	RS1/10SR0R0J
R 1549	(B,52,63)	RS1/16SS0R0J
R 1550	(A,45,69)	RS1/16SS0R0J
R 1551	(A,44,69)	RS1/16SS0R0J
R 1552	(A,26,50) (A)	RS1/16SS0R0J
R 1709	(A,25,54) (A)	RAB4CQ221J
R 1715	(A,25,40) (A)	RAB4CQ0R0J
R 1724	(A,13,83)	RS1/10SR0R0J
R 1725	(A,15,83)	RS1/10SR0R0J
R 1729	(A,26,24) (A)	RAB4CQ0R0J
R 1730	(A,27,26)	RS1/16SS103J
R 1732	(A,46,113)	RS1/10SR0R0J
R 1733	(A,45,113)	RS1/10SR0R0J
R 1734	(A,18,24)	RS1/10SR0R0J
R 1735	(A,20,24)	RS1/10SR0R0J
R 1736	(B,39,65)	RS1/10SR0R0J
R 1737	(B,40,64)	RS1/10SR0R0J
R 1746	(B,22,13)	RS1/10SR0R0J
R 1747	(B,24,13)	RS1/10SR0R0J
R 1760	(B,60,31)	RS1/10SR0R0J
R 1761	(B,62,31)	RS1/10SR0R0J
R 1801	(B,155,22)	RS1/16SS102J
R 1802	(A,153,12)	RS1/16SS0R0J
R 1803	(A,151,12)	RS1/16SS0R0J
R 1804	(A,149,12)	RS1/16SS0R0J
R 1805	(B,159,13)	RS1/16SS471J

Circuit Symbol and No.		Part No.
R 1806	(A,159,13)	RS1/16SS221J
R 1807	(A,158,12)	RS1/16SS221J
R 1808	(A,157,15)	RS1/16SS221J
R 1809	(B,155,10)	RS1/16SS221J
R 1810	(A,155,12)	RS1/16SS221J
R 1811	(A,147,12)	RS1/16SS0R0J
R 1814	(B,163,18)	RS1/10SR0R0J
R 1815	(A,165,20)	RS1/4SA0R0J
R 1816	(B,144,14)	RS1/16SS0R0J
R 1822	(B,155,18)	RS1/16SS473J
R 1823	(B,157,15)	RS1/8SQ561J
R 1826	(B,139,16)	RS1/16SS0R0J
R 1827	(A,156,22)	RS1/10SR103J
R 1828	(A,151,18)	RS1/16SS683J
R 1829	(A,151,20)	RS1/16SS683J
R 1901	(A,131,41)	RS1/16SS303J
R 1904	(B,133,36)	RS1/16SS471J
R 1905	(B,131,38)	RS1/16SS681J
R 1906	(B,127,44)	RS1/10SR103J
R 2001	(B,103,12)	RS1/16SS222J
R 2002	(A,79,6)	RS1/16SS222J
R 2104	(B,163,109)	RS1/16SS562J
R 2105	(A,154,106)	RS1/10SR102J
R 2106	(A,152,104)	RS1/10SR102J
R 2107	(B,149,111)	RS1/16SS103J
R 2108	(A,150,104)	RS1/10SR471J
R 2109	(A,149,104)	RS1/10SR471J
R 2110	(A,164,107)	RS1/16SS0R0J
R 2111	(A,163,106)	RS1/16SS0R0J
R 2112	(A,164,104)	RS1/16SS0R0J
R 2113	(A,163,102)	RS1/16SS0R0J
R 2117	(B,164,110)	RS1/16SS272J
R 2118	(B,162,110)	RS1/16SS272J
R 2119	(A,160,106)	RS1/10SR222J
R 2120	(A,157,103)	RS1/16SS562J
R 2121	(A,158,103)	RS1/16SS332J
R 2201	(A,79,81)	RS1/16SS820J
R 2202	(A,85,83)	RS1/16SS820J
R 2203	(A,80,87)	RS1/16SS820J
R 2204	(A,84,87)	RS1/16SS820J
R 2205	(A,76,82)	RS1/16SS223J
R 2206	(A,85,82)	RS1/16SS223J
R 2207	(A,80,86)	RS1/16SS223J
R 2208	(A,83,86)	RS1/16SS223J
R 2209	(A,79,83)	RS1/16SS472J
R 2210	(A,77,83)	RS1/16SS472J
R 2211	(A,83,84)	RS1/16SS472J
R 2212	(A,82,84)	RS1/16SS472J
R 2213	(B,170,105)	RS1/16SS821J
R 2214	(B,172,101)	RS1/16SS472J
R 2215	(B,170,106)	RS1/16SS223J
R 2216	(B,172,102)	RS1/16SS472J
R 2217	(B,173,106)	RS1/16SS223J
R 2218	(B,175,107)	RS1/16SS821J
R 2225	(B,26,108)	RS1/10SR0R0J
R 2226	(B,32,109)	RS1/10SR0R0J
R 2227	(B,33,129)	RS1/16SS0R0J
R 2228	(B,35,129)	RS1/16SS0R0J
R 2229	(B,29,130)	RS1/16SS0R0J
R 2230	(B,46,117)	RS1/10SR0R0J

Circuit Symbol and No.		Part No.
R 2231	(B,42,117)	RS1/10SR0R0J
R 2232	(B,129,90)	RS1/16SS820J
R 2233	(B,134,95)	RS1/16SS820J
R 2234	(B,131,91)	RS1/16SS223J
R 2235	(B,131,95)	RS1/16SS223J
R 2236	(B,134,93)	RS1/16SS472J
R 2237	(B,128,96)	RS1/16SS472J
R 2265	(A,111,89)	RS1/4SA0R0J
R 2266	(A,94,96)	RS1/4SA0R0J
R 2308	(B,120,132) (A)	RS1/16SS0R0J
R 2309	(B,121,132) (B)	RS1/16SS471J
R 2311	(B,123,132) (C)	RS1/16SS471J
R 2313	(B,125,132) (D)	RS1/16SS471J
R 2314	(B,126,132) (E)	RS1/16SS0R0J
R 2315	(B,127,132) (F)	RS1/16SS471J
R 2317	(B,129,132) (G)	RS1/16SS471J
R 2319	(B,153,121)	RS1/16SS0R0J
R 2333	(B,86,27) (D,E,F,G)	RS1/16SS6800D
R 2335	(B,94,38) (D,E,F,G)	RS1/16SS6800D
R 2336	(A,105,37) (D,E,F,G)	RS1/16SS0R0J
R 2338	(B,95,38) (D,E,F,G)	RS1/16SS8201D
R 2339	(A,114,32) (D,E,F,G)	RS1/16SS8201D
R 2341	(B,99,38)	RS1/16SS101J
R 2342	(B,100,38)	RS1/16SS101J
R 2343	(B,101,37)	RS1/16SS101J
R 2344	(B,106,45)	RS1/16SS101J
R 2347	(A,81,20)	RS1/16SS101J

CAPACITORS

C 101	(B,129,87)	CKSRYB104K50
C 104	(A,119,89) 15 000 uF/16 V	CCH1980
C 106	(B,66,110)	CKSRYB105K10
C 108	(B,52,109)	CKSSYB102K50
C 110	(B,103,119)	CKSSYB104K16
C 201	(B,95,122)	CKSQYB105K25
C 202	(B,93,122)	CKSQYB105K25
C 203	(B,101,122)	CKSQYB105K25
C 204	(B,90,123)	CKSQYB105K25
C 205	(A,104,125) 4.7 uF	CCG1331
C 206	(A,92,122)	XCEVW100M16
C 207	(B,119,127)	CKSRYB104K16
C 212	(B,82,113) 4.7 uF	CCG1201
C 216	(A,103,111) 4 700 uF/16 V	CCH2085
C 217	(A,69,112)	XCEVW101M16
C 218	(A,110,125)	CKSRYB104K50
C 219	(B,89,115) 10 uF	CCG1192
C 220	(A,90,126) 0.1 uF	CCG1357
C 312	(A,171,85)	XCEVW101M16
C 313	(B,169,90)	CKSRYB105K16
C 314	(B,161,36)	CKSSYB104K10
C 317	(B,145,61)	CKSQYB104K25
C 318	(B,150,56)	CKSQYB104K25
C 320	(A,150,56)	XCEVW101M16
C 321	(A,154,29)	CKSSYB102K50
C 322	(A,137,43)	CKSRYB105K10
C 323	(A,143,40)	XCEVW101M16
C 324	(A,152,32)	CKSSYB104K10
C 327	(A,149,45)	CKSSYB104K16
C 328	(A,152,48) 0.1 uF	CCG1266

Circuit Symbol and No.		Part No.
C 329	(A,155,45)	CKSSYB102K50
C 335	(B,164,43)	CCSSCH101J50
C 336	(B,171,46) 10 uF	CCG1236
C 337	(B,167,54) 10 uF	CCG1236
C 339	(B,171,48) 10 uF	CCG1236
C 342	(B,156,42)	CKSSYB104K16
C 343	(B,154,51)	CKSRYB104K50
C 344	(B,147,61)	CKSRYB105K10
C 345	(B,152,56)	CKSRYB105K10
C 347	(B,127,35)	CKSSYB104K10
C 349	(A,152,40)	XCEVW470M16
C 502	(B,30,46) (A)	CKSRYB105K10
C 503	(B,29,57) 4.7 uF(A)	CCG1201
C 504	(B,31,47) (A)	CKSRYB105K10
C 505	(B,38,57) 4.7 uF(A)	CCG1201
C 510	(B,42,51)	CKSRYB105K10
C 511	(B,51,51)	CKSRYB105K10
C 516	(B,31,55) (A)	CKSSYB104K16
C 602	(B,116,22)	CKSRYB105K10
C 603	(A,106,31)	CCSRCH220J50
C 604	(A,105,30)	CCSSCH220J50
C 605	(A,106,44)	CKSSYB104K10
C 606	(A,105,25)	CKSSYB104K10
C 607	(B,103,29)	CKSSYB104K10
C 608	(B,98,32) 4.7 uF	CCG1331
C 611	(B,87,25)	CKSSYB104K10
C 612	(A,88,50)	CKSSYB104K10
C 613	(A,75,29)	CKSSYB104K10
C 615	(A,105,52)	CKSSYB104K10
C 616	(A,105,54) 10 uF	CCG1192
C 618	(B,103,41)	CCSSCH101J50
C 620	(A,70,42)	CKSSYB104K10
C 625	(B,117,13)	CKSSYB104K10
C 633	(B,94,29)	CKSSYB104K10
C 639	(B,94,28)	CKSSYB104K10
C 801	(B,81,58)	CKSSYB104K10
C 802	(B,80,55)	CKSSYB104K10
C 803	(A,71,67)	CKSRYB105K10
C 804	(B,70,70)	CKSRYB105K10
C 805	(B,71,70)	CKSRYB105K10
C 806	(B,73,70)	CKSRYB105K10
C 807	(B,77,53) (Except A)	CCSSCH271J50
C 810	(A,72,66)	CKSSYB104K10
C 811	(B,70,67)	CKSRYB105K10
C 812	(B,80,68)	CKSSYB104K10
C 813	(B,66,71)	CKSRYB105K10
C 814	(B,81,66)	CKSSYB104K10
C 815	(B,67,70)	CKSRYB105K10
C 816	(B,81,65)	CKSSYB104K10
C 817	(B,66,67)	CKSQYB105K16
C 818	(B,81,64)	CKSSYB104K10
C 819	(B,66,66)	CKSQYB105K16
C 820	(B,81,63)	CKSSYB104K10
C 821	(B,66,64)	CKSQYB105K16
C 822	(B,82,62)	CKSSYB104K10
C 823	(B,67,62)	CKSRYB105K10
C 824	(B,82,61)	CKSSYB104K10
C 825	(B,67,61)	CKSRYB105K10
C 826	(B,82,60)	CKSSYB104K10
C 827	(B,67,59)	CKSRYB105K10

Circuit Symbol and No.		Part No.	Circuit Symbol and No.		Part No.
C 828	(B,82,59)	CKSSYB104K10	C 1019	(B,145,78)	CKSRYB105K16
C 829	(B,67,58)	CKSRYB105K10	C 1020	(B,155,96)	CKSRYB105K16
C 830	(B,67,57)	CKSRYB105K10	C 1021	(B,145,77)	CKSSYB104K16
C 831	(B,68,55)	CKSRYB105K10	C 1022	(B,155,98)	CKSSYB104K16
C 832	(B,79,57)	CKSSYB104K10	C 1023	(B,167,100)	CKSRYB105K16
C 833	(A,76,58) 10 uF	CCG1192	C 1024	(B,165,100)	CKSSYB104K16
C 834	(B,74,54)	CKSSYB104K10	C 1025	(B,164,101)	CCSSCH221J50
C 835	(A,76,56)	CKSSYB104K10	C 1027	(B,162,101)	CCSSCH221J50
C 836	(A,73,61)	CKSQYB104K25	C 1028	(B,151,90)	CKSSYB104K16
C 837	(A,78,61)	CKSQYB104K25	C 1039	(B,156,90) 10 uF	CCG1234
C 838	(A,73,58) 10 uF	CCG1192	C 1040	(B,150,81) 10 uF	CCG1192
C 839	(A,78,60) 10 uF	CCG1192	C 1041	(B,158,92) 10 uF	CCG1192
C 840	(B,78,68)	CKSSYB104K10	C 1042	(B,157,94)	CKSRYB105K10
C 841	(B,74,70)	CKSRYB105K10	C 1043	(B,149,90)	CKSRYB105K10
C 842	(B,75,70)	CKSRYB105K10	C 1101	(B,134,62)	CCSSCH120J50
C 843	(B,77,70)	CKSRYB105K10	C 1102	(B,138,63)	CCSSCH120J50
C 901	(A,47,27)	CKSRYB105K10	C 1103	(B,129,50)	CKSRYB105K16
C 902	(B,43,27)	CKSRYB105K10	C 1104	(B,130,59)	CKSSYB123K16
C 903	(B,40,28)	CKSRYB105K10	C 1105	(A,132,59)	CKSSYB104K16
C 904	(B,43,28)	CKSRYB105K10	C 1106	(A,130,59)	CKSQYB225K10
C 905	(B,40,29)	CKSRYB105K10	C 1107	(B,130,50)	CKSRYB105K16
C 906	(B,43,30)	CKSRYB105K10	C 1108	(A,138,56)	CKSQYB104K25
C 907	(B,40,31)	CKSRYB105K10	C 1109	(A,135,53)	CKSQYB104K25
C 908	(A,48,27)	CKSSYB104K10	C 1110	(A,133,55)	CKSQYB104K25
C 909	(B,47,21)	CKSRYB105K10	C 1111	(B,141,56)	CKSSYB103K16
C 910	(B,48,18)	CKSRYB105K10	C 1112	(A,131,57)	CKSQYB104K25
C 911	(B,49,21)	CKSRYB105K10	C 1113	(A,136,59)	CKSQYB104K25
C 912	(B,50,18) (A)	CKSRYB105K10	C 1114	(B,127,58) 10 uF	CCG1192
C 913	(B,50,21) (A)	CKSRYB105K10	C 1115	(A,129,57) 10 uF	CCG1192
C 914	(B,51,18) (A)	CKSRYB105K10	C 1116	(A,142,53) 10 uF	CCG1192
C 915	(A,56,32) 10 uF	CCG1192	C 1117	(B,127,56) 10 uF	CCG1192
C 916	(B,57,31)	CKSSYB104K10	C 1118	(B,128,64) 10 uF	CCG1192
C 917	(A,55,31)	CKSSYB104K10	C 1119	(B,126,64) 10 uF	CCG1192
C 918	(A,53,27)	CKSQYB104K25	C 1120	(A,140,53)	CKSQYB104K25
C 919	(A,53,30)	CKSQYB104K25	C 1123	(B,139,60)	CCSSCH121J50
C 920	(A,51,27) 10 uF	CCG1192	C 1125	(B,140,61)	CCSSCH121J50
C 921	(A,51,30) 10 uF	CCG1192	C 1126	(B,140,63)	CCSSCH121J50
C 927	(B,54,18)	CKSRYB105K10	C 1201	(A,123,46)	CKSSYB104K16
C 928	(B,55,21)	CKSRYB105K10	C 1202	(A,124,46) 10 uF	CCG1192
C 939	(B,52,21)	CKSRYB105K10	C 1205	(B,116,49) 10 uF	CCG1192
C 940	(B,53,18)	CKSRYB105K10	C 1207	(B,141,49)	CCSSCH470J50
C 941	(B,53,21)	CKSRYB105K10	C 1208	(B,146,52)	CCSSCH121J50
C 1001	(B,162,106)	CKSQYB105K16	C 1209	(B,144,53)	CCSSCH121J50
C 1002	(B,164,106)	CKSQYB105K16	C 1210	(A,121,57)	CKSSYB104K16
C 1003	(B,152,68)	CKSQYB105K16	C 1211	(A,123,57) 10 uF	CCG1192
C 1004	(B,150,68)	CKSQYB105K16	C 1216	(A,120,66)	CKSSYB104K16
C 1005	(B,147,68)	CKSQYB105K16	C 1217	(A,121,67) 10 uF	CCG1192
C 1006	(B,145,68)	CKSQYB105K16	C 1222	(B,119,46)	CKSRYB182K50
C 1007	(B,149,106)	CKSQYB105K16	C 1223	(B,121,49)	CKSRYB182K50
C 1008	(B,151,106)	CKSQYB105K16	C 1224	(B,109,58)	CKSRYB182K50
C 1009	(B,153,106)	CKSQYB105K16	C 1225	(B,113,55)	CKSRYB182K50
C 1010	(B,155,106)	CKSQYB105K16	C 1227	(B,117,68)	CKSRYB182K50
C 1011	(B,145,72)	CCSSCH330J50	C 1229	(A,115,49)	CKSSYB104K16
C 1012	(B,154,102)	CCSSCH330J50	C 1230	(A,111,57) 10 uF	CCG1192
C 1013	(B,152,72)	CCSSCH330J50	C 1231	(A,112,59)	CKSSYB104K16
C 1014	(B,150,102)	CCSSCH330J50	C 1232	(A,110,65) 10 uF	CCG1192
C 1015	(B,144,75)	CCSSCH330J50	C 1233	(A,114,69)	CKSSYB104K16
C 1016	(B,157,99)	CCSSCH330J50	C 1301	(B,86,90) 2.2 uF	CCG1218
C 1017	(B,153,75)	CCSSCH330J50	C 1302	(B,86,88) 2.2 uF	CCG1218
C 1018	(B,147,99)	CCSSCH330J50	C 1303	(B,93,82) 10 uF	CCG1192

Circuit Symbol and No.			Part No.
C 1304	(B,87,81)	10 uF	CCG1192
C 1305	(B,85,93)		CKSRYB105K10
C 1306	(B,86,91)		CKSRYB105K10
C 1307	(B,73,93)		CKSRYB105K10
C 1308	(B,73,92)		CKSRYB105K10
C 1314	(A,73,99)		XCEVW100M16
C 1315	(B,73,90)	2.2 uF	CCG1218
C 1317	(A,73,92)		XCEVW100M16
C 1319	(B,89,81)		CKSQYB104K25
C 1321	(B,85,81)		CKSQYB104K25
C 1322	(A,85,76)		XCEVW470M16
C 1323	(A,74,77)		XCEVW470M16
C 1447	(B,32,103)		CKSSYB103K16
C 1501	(A,54,54)		CKSSYB104K16
C 1502	(A,54,56)		CKSSYB104K16
C 1503	(A,56,55)	10 uF	CCG1192
C 1504	(A,46,55)	10 uF	CCG1192
C 1505	(A,48,67)		CKSSYB104K16
C 1507	(A,47,68)		CKSSYB224K6R3
C 1508	(A,47,69)		CKSSYB102K50
C 1509	(A,42,67)		CKSSYB104K16
C 1511	(A,47,79)		CCSSCH220J50
C 1512	(A,42,79)		CCSSCH271J50
C 1515	(A,45,60)		CKSSYB104K16
C 1518	(A,37,70)		CCSSCH102J50
C 1519	(B,28,101)		CCSSCH471J50
C 1523	(A,40,65)		CKSSYB152K50
C 1533	(A,41,83)		CCSSCH100D50
C 1705	(A,26,57)	10 uF(A)	CCG1192
C 1706	(A,25,57)	(A)	CKSSYB104K10
C 1707	(A,26,46)	10 uF(A)	CCG1192
C 1708	(A,25,46)	(A)	CKSSYB104K10
C 1711	(B,20,16)	(A)	CKSSYB104K16
C 1801	(B,162,13)		CKSSYB104K10
C 1804	(B,166,16)		CKSSYB104K16
C 1805	(A,166,13)		CKSSYB104K16
C 1806	(B,157,10)		CCSSCH101J50
C 1813	(B,158,11)		CCSSCH101J50
C 1814	(B,162,8)		CCSSCH270J50
C 1815	(B,145,11)		CCSSCH270J50
C 1824	(B,91,83)		CKSQYB104K25
C 1901	(B,131,41)		CKSSYB104K10
C 2101	(B,157,109)		CCSRCH101J50
C 2102	(B,156,111)		CCSRCH101J50
C 2103	(B,159,113)		CCSRCH101J50
C 2201	(A,76,88)	10 uF	CCG1192
C 2202	(A,85,84)	10 uF	CCG1192
C 2203	(A,81,88)	10 uF	CCG1192
C 2204	(A,86,88)	10 uF	CCG1192
C 2205	(B,163,127)		CCSSCH101J50
C 2208	(B,26,110)		CKSRYB104K50
C 2209	(B,30,110)		CKSRYB104K50
C 2210	(B,128,94)	10 uF	CCG1192
C 2211	(B,136,93)	10 uF	CCG1192
C 2217	(A,109,76)		CKSRYB104K50
C 2220	(B,170,103)	4.7 uF	CCG1201
C 2221	(B,175,104)	4.7 uF	CCG1201
C 2225	(B,24,113)		CCSSCH270J50
C 2226	(B,31,132)		CCSSCH270J50
C 2227	(B,113,79)		CCSSCH270J50
C 2228	(A,108,75)		CCSSCH270J50
C 2231	(B,170,107)		CCSRCH101J50
C 2232	(B,173,107)		CCSRCH101J50
C 2233	(A,172,103)		CCSRCH121J50

B

Unit Number : CXX8721(A)
Unit Number : CXX8719(B)
Unit Number : CXX8722(C)
Unit Number : CXX8720(D,E,F,G)
Unit Name : IF Unit(Service)

MISCELLANEOUS

IC 7003	(A,79,104)	IC	NJM2387ADL3
IC 7004	(A,12,34)	Regulator IC	MM3479A18P
IC 7008	(A,118,47)	Regulator IC	MM3479A12P
IC 7010	(A,82,44)	Regulator IC	MM3411A15N
IC 7011	(B,26,78)	IC	AN33012UA
IC 7012	(A,32,91)	IC	NJM2886DL3-05
IC 7101	(B,52,70)	DC/DC CONV IC	LTC3858EGN-1
IC 7202	(A,97,107)	DC/DC CONV IC	AN33014UA
IC 7203	(A,91,86)	DC/DC CONV IC	AN33014UA
IC 7601	(B,162,29)	CONV IC	WM8761BGED
IC 7602	(B,140,25)	CONV IC	WM8761BGED
IC 7603	(B,138,54)	CONV IC	WM8761BGED
IC 7701	(B,32,51)	IC	NJM2740V
IC 7703	(B,143,65)	AD Convrter IC	AK5357VT
IC 7704	(A,22,35)	IC	TC4066BFT
IC 7705	(A,7,105)	IC	NJU7043V
IC 7706	(A,43,41)	IC	AK7738VQ
IC 7709	(B,45,49)	IC	NJM2740V
IC 7901	(B,63,43)	V AMP IC	BH7673G
IC 7902	(B,67,43)	V AMP IC	BH7673G
IC 7903	(A,65,43)	V AMP IC	BH7673G
IC 7904	(A,61,44)	V AMP IC	BH7673G
IC 7905	(A,81,61)	IC	ML86V7675TBZA3A
IC 7906	(A,94,59)	IC	TC74LCX541FK
IC 7907	(A,94,66)	IC	TC7SZ125FUS1
IC 7908	(B,74,87)	V AMP IC	BH7673G
IC 7911	(B,70,80)	V AMP IC	BH7673G
IC 7912	(B,68,68)	V AMP IC	BH7673G
IC 8001	(B,113,64)	IC	MN864779KT
IC 8003	(A,124,66)	IC	WM8761BGED
IC 8202	(B,48,24)	IC(A)	TC7WZ34FK
IC 8501	(A,13,89)	IC(A,B,C)	TC7SH08FUS1
IC 8502	(B,140,92)	IC	MAX14644ETA
IC 8504	(A,7,89)	L-MOS And Gate(A,B,C)	TC7SET08FUS1
IC 8505	(A,42,109)	L-MOS And Gate(A)	TC7SET08FUS1
IC 8506	(A,34,109)	IC(A)	TC7SH08FUS1
IC 8507	(A,38,109)	L-MOS And Gate(A)	TC7SET08FUS1
IC 8601	(A,20,8)	IC	NJM4565V
Q 7002	(A,70,101)	Resistor Built-IN TR	LTC014EEB
Q 7011	(A,107,46)	IC	RZQ050P01
Q 7012	(A,113,47)	Transistor	LSCR523UB
Q 7013	(A,21,66)	Transistor	ATP112-H
Q 7014	(A,12,74)	Chip Transistor	2SB1689
Q 7015	(A,8,78)	Transistor	LSCR523UB
Q 7016	(A,63,85)	IC	RZQ050P01

Circuit Symbol and No.			Part No.
Q 7017	(A,66,88)	Transistor	LSCR523UB
Q 7101	(A,41,78)	FET	FK8V03040
Q 7102	(A,41,62)	FET	FK8V03040
Q 7103	(A,38,78)	FET	FK8V03050
Q 7104	(A,38,62)	FET	FK8V03050
Q 7201	(A,139,71)	Resistor Built-IN TR	LTC014EEB
Q 7202	(A,144,68)	Bipolar TR	LSAR523UB
Q 7203	(A,141,73)	Resistor Built-IN TR	LTC014EEB
Q 7204	(A,146,72)	Bipolar TR	LSAR523UB
Q 7703	(B,27,36)	Bipolar TR	LSCR523UB
Q 7704	(A,29,30)	Resistor Built-IN TR	LTC044EEB
Q 7705	(A,29,35)	Resistor Built-IN TR	LTC044EEB
Q 7901	(B,63,49)	Bipolar TR	LSCR523UB
Q 7902	(B,67,49)	Bipolar TR	LSCR523UB
Q 7903	(A,65,49)	Bipolar TR	LSCR523UB
Q 7904	(A,61,50)	Bipolar TR	LSCR523UB
Q 7905	(B,59,53)	Bipolar TR	LSCR523UB
Q 7906	(A,72,72)	Bipolar TR	LSCR523UB
Q 7907	(B,74,77)	Bipolar TR	LSCR523UB
Q 7908	(B,67,64)	Bipolar TR	LSCR523UB
Q 8001	(A,119,91)	Resistor Built-IN TR	LTC023EEB
Q 8002	(A,117,95)	Bipolar TR	LSAR523UB
Q 8003	(A,117,73)	Chip Transistor	RN4982
Q 8501	(A,138,97)	Bipolar TR	LSAR523UB
Q 8601	(A,28,12)	Chip Transistor	RN4983
D 7006	(A,26,71)	Diode	RB080L-30
D 7101	(B,45,67)	Diode	DB2J41100
D 7102	(B,45,65)	Diode	DB2J41100
D 7201	(B,98,112)	Diode	RB060M-30
D 7202	(B,92,91)	Diode	RB060M-30
D 7501	(B,127,29)	Diode	RB501VM-40
D 7502	(A,127,25)	Diode	RB501VM-40
D 7512	(B,89,26)	Diode	DZ2J039M0
D 8001	(B,131,100)	Diode	EZAEG2A50AX
D 8002	(B,129,100)	Diode	EZAEG2A50AX
D 8003	(B,129,98)	Diode	EZAEG2A50AX
D 8004	(B,127,98)	Diode	EZAEG2A50AX
D 8005	(B,127,100)	Diode	EZAEG2A50AX
D 8006	(B,125,100)	Diode	EZAEG2A50AX
D 8007	(B,124,98)	Diode	EZAEG2A50AX
D 8008	(B,123,98)	Diode	EZAEG2A50AX
D 8011	(B,116,98)	Diode	EZAEG2A50AX
D 8012	(B,115,100)	Diode	EZAEG2A50AX
D 8013	(A,113,76)	Rectifier Diode	DA2J101
D 8014	(B,122,101)	Diode	EZAEG2A50AX
D 8015	(A,123,78)	Diode	DAN202UM
D 8016	(B,119,102)	Diode	EZAEG2A50AX
D 8401	(B,104,22)	Diode	EZAEG2A50AX
D 8402	(B,106,22)	Diode	EZAEG2A50AX
D 8403	(B,108,20)	Diode	EZAEG2A50AX
D 8404	(B,108,24)	Diode	EZAEG2A50AX
D 8405	(B,111,21)	Diode	EZAEG2A50AX
D 8406	(B,112,20)	Diode	EZAEG2A50AX
D 8419	(B,111,23)	Diode	EZAEG2A50AX
D 8420	(B,109,23)	Diode	EZAEG2A50AX
D 8423	(B,108,21)	Diode	EZAEG2A50AX
D 8424	(B,106,20)	Diode	EZAEG2A50AX
D 8501	(A,10,86)	Rectifier Diode(A,B,C)	DA2J101
D 8506	(B,143,100)	Diode	EZAEG2A50AX
D 8507	(B,141,104)	Diode	EZAEG2A50AX

Circuit Symbol and No.			Part No.
D 8508	(B,143,102)	Diode	EZAEG2A50AX
D 8509	(B,141,103)	Diode	EZAEG2A50AX
D 8601	(A,45,13)	Diode	DZ2S068C
D 8602	(A,32,10)	Diode	DZ2S068C
L 7003	(A,30,62)	SMD SPL Inductor	CTH1544
L 7101	(A,50,60)	Inductor	CTH1482
L 7102	(A,50,81)	Choke Coil	CTH1479
L 7103	(B,34,76)	Inductor	CTF1738
L 7201	(B,109,109)	SMD SPL Inductor	CTH1524
L 7202	(B,103,89)	SMD SPL Inductor	CTH1524
L 7203	(B,102,112)	Inductor	CTF1793
L 7204	(B,96,92)	Inductor	CTF1793
L 7301	(B,83,44)	Inductor	CTF1868
L 7302	(B,88,44)	Inductor	CTF1870
L 7303	(B,143,33)	Inductor(A)	CTF1795
L 7304	(B,145,32)	Inductor(A)	CTF1795
L 7309	(B,138,44)	Inductor	CTF1795
L 7310	(B,94,43)	Inductor	CTF1795
L 7311	(B,95,45)	Inductor	CTF1795
L 7312	(B,96,47)	Inductor	CTF1795
L 7313	(B,96,44)	Inductor	CTF1795
L 7314	(B,97,46)	Inductor	CTF1795
L 7315	(B,97,47)	Inductor	CTF1795
L 7501	(A,101,39)	Inductor	CTF1736
L 7502	(A,151,49)	Inductor	CTF1736
L 7601	(B,166,21)	Inductor	CTF1786
L 7602	(B,136,19)	Inductor	CTF1786
L 7603	(B,147,49)	Inductor	CTF1786
L 7703	(B,29,33)	Ferrite Bead	CTF1528
L 7704	(B,152,64)	Inductor	CTF1558
L 7705	(B,149,60)	Inductor	CTF1558
L 7707	(B,28,25)	Inductor	CTF1869
L 7902	(A,69,65)	Inductor	CTF1869
L 7903	(A,79,74)	Inductor	CTF1869
L 7904	(A,86,47)	Inductor	CTF1869
L 7905	(A,78,41)	Inductor	CTF1869
L 7906	(A,97,69)	Inductor	CTF1869
L 7907	(A,96,63)	Inductor	CTF1869
L 7909	(A,96,65)	Chip Beads	VTL1126
L 7915	(A,85,52)	Inductor	CTF1787
L 7916	(A,82,51)	Inductor	CTF1787
L 7917	(A,90,65)	Inductor	CTF1787
L 7918	(A,91,62)	Inductor	CTF1787
L 7919	(A,80,52)	Inductor	CTF1787
L 7920	(A,79,52)	Inductor	CTF1787
L 7921	(A,76,52)	Inductor	CTF1787
L 7922	(A,81,72)	Inductor	CTF1787
L 7923	(A,83,71)	Inductor	CTF1787
L 7930	(A,102,60)	Chip Beads	VTL1127
L 7931	(A,101,60)	Chip Beads	VTL1127
L 7932	(A,102,59)	Chip Beads	VTL1127
L 7933	(A,101,58)	Chip Beads	VTL1127
L 7934	(A,102,58)	Chip Beads	VTL1127
L 7935	(A,101,57)	Chip Beads	VTL1127
L 7936	(A,102,56)	Chip Beads	VTL1127
L 7937	(A,101,56)	Chip Beads	VTL1127
L 8001	(B,130,96)	Noise Filter	CTF1834
L 8002	(B,123,96)	Noise Filter	CTF1834
L 8003	(B,126,96)	Noise Filter	CTF1834
L 8004	(B,128,96)	Noise Filter	CTF1834

Circuit Symbol and No.		Part No.
L 8005	(B,110,73) Ferrite Bead	CTF1528
L 8006	(B,120,67) Chip Beads	VTL1127
L 8007	(B,120,65) Chip Beads	VTL1127
L 8008	(B,120,64) Chip Beads	VTL1127
L 8009	(B,120,62) Chip Beads	VTL1126
L 8011	(A,123,74) Inductor	CTF1786
L 8012	(A,109,79) Inductor	CTF1795
L 8201	(B,55,18) Ferrite Bead	CTF1528
L 8202	(B,54,18) Ferrite Bead	CTF1528
L 8203	(B,53,18) Ferrite Bead	CTF1528
L 8204	(B,132,15) Ferrite Bead	CTF1528
L 8205	(B,69,22) Ferrite Bead	CTF1528
L 8401	(B,104,30) Coil(Except C)	CTH1554
L 8401	(B,104,30) Coil(C)	CTF1731
L 8402	(B,102,30) Coil(Except C)	CTH1554
L 8402	(B,102,30) Coil(C)	CTF1731
L 8403	(B,101,30) Coil(Except C)	CTH1554
L 8403	(B,101,30) Coil(C)	CTF1731
L 8404	(B,99,30) Coil(Except C)	CTH1554
L 8404	(B,99,30) Coil(C)	CTF1731
L 8405	(B,97,30) Coil	CTH1554
L 8501	(B,140,97) Choke Coil 90 ohm	CTH1319
L 8502	(B,137,97) Choke Coil 90 ohm	CTH1319
X 7701	(A,34,42) Resonator 12.288 MHz	CSS1811
X 7901	(A,86,74) Resonator 32.000 MHz	CSS1818
X 8001	(B,104,73) Resonator 27.000 MHz	CSS1768
P 7001	(B,62,121) Poly Switch(A)	MINISMDC150F/24
CN7001	(A,51,114) Connector	CKS4977
CN7301	(B,99,38) B TO B Connector	CKS6547
CN7302	(B,136,38) B TO B Connector	CKS6549
CN7701	(B,20,20) B TO B Connector	CKS6346
CN8201	(B,65,11) FFC/FPC Connector	CKS6646
CN8202	(B,83,117) Plug	CKM1599
CN8203	(B,147,9) FFC/FPC Connector	CKS6646
CN8204	(B,66,94) Connector	CKS6007
CN8401	(B,109,14) FFC/FPC Connector	CKS6646
CN8502	(B,58,127) Connector(A,B,C)	CKS6603
JA7501	(A,103,21) Connector	CKS6282
JA7502	(A,155,32) Connector	CKS6438
JA8001	(B,125,109) Connector	CKS6560
JA8501	(B,147,116) Connector	DKN1417
JA8502	(B,41,127) Connector(A)	CKS6495
JA8503	(B,10,127) Jack	CKN1040
JA8601	(B,38,10) Connector	CKS6437
	BT Module	CWX4710

RESISTORS

Circuit Symbol and No.		Part No.
R 7001	(A,66,111) (A)	RS1/4SA0R0J
R 7008	(A,70,104)	RS1/16SS473J
R 7011	(A,71,103)	RS1/16SS2401D
R 7017	(A,72,104)	RS1/16SS8201D
R 7018	(A,72,101)	RS1/16SS2201D
R 7025	(A,36,87)	RS1/16SS0R0J
R 7026	(A,41,87)	RS1/10SR0R0J
R 7029	(A,16,32)	RS1/16SS102J
R 7032	(A,13,38)	RS1/8SQ0R0J
R 7041	(A,113,44)	RS1/16SS683J
R 7049	(A,107,49)	RS1/10SR103J
R 7050	(A,111,46)	RS1/16SS683J
R 7056	(A,99,47)	RS1/8SQ0R0J
R 7057	(A,102,45)	RS1/10SR331J
R 7066	(B,28,69)	RS1/16SS2702D
R 7067	(B,28,70)	RS1/16SS1101D
R 7068	(B,29,71)	RS1/16SS2701D
R 7071	(A,18,77) 0.011 ohm	CCN1341
R 7077	(B,30,72)	RS1/16SS1103D
R 7078	(B,26,69)	RS1/16SS562J
R 7079	(B,28,68)	RS1/16SS0R0J
R 7082	(B,30,69)	RS1/16SS0R0J
R 7086	(A,9,74)	RS1/16SS102J
R 7087	(A,8,75)	RS1/16SS102J
R 7088	(A,10,81)	RS1/16SS103J
R 7091	(B,24,72)	RS1/16SS0R0J
R 7092	(A,70,85)	RS1/16SS683J
R 7093	(A,69,88)	RS1/16SS683J
R 7094	(A,63,87)	RS1/10SR103J
R 7098	(A,8,80)	RS1/16SS103J
R 7099	(B,61,115) (A)	RS1/4SA0R0J
R 7101	(B,49,55)	RS1/16SS0R0J
R 7102	(B,53,55)	RS1/16SS0R0J
R 7103	(B,56,76)	RS1/16SS0R0J
R 7104	(B,57,78)	RS1/16SS1502D
R 7105	(B,58,77)	RS1/16SS4303D
R 7106	(B,58,75)	RS1/16SS8202D
R 7107	(B,56,55)	RS1/16SS104J
R 7109	(B,56,65)	RS1/16SS0R0J
R 7110	(B,57,64)	RS1/16SS1802D
R 7111	(B,58,64)	RS1/16SS4703D
R 7112	(B,58,66)	RS1/16SS1503D
R 7113	(B,60,75)	RS1/16SS562J
R 7114	(B,56,56)	RS1/16SS0R0J
R 7115	(B,59,72)	RS1/10SR0R0J
R 7116	(B,60,66)	RS1/16SS392J
R 7117	(B,59,74)	RS1/10SR0R0J
R 7118	(B,58,69)	RS1/10SR0R0J
R 7119	(B,58,68)	RS1/10SR0R0J
R 7120	(B,55,57)	RS1/10SR334J
R 7121	(B,58,57)	RS1/10SR274J
R 7122	(B,57,71)	RS1/16SS104J
R 7123	(B,45,75)	RS1/10SR120J
R 7124	(B,46,63)	RS1/10SR100J
R 7125	(B,44,74)	RS1/10SR2R2J
R 7128	(A,58,78) 15 mohm	CCN1328
R 7129	(A,59,78) 15 mohm	CCN1328
R 7130	(A,59,62) 12 mohm	CCN1321
R 7131	(A,58,62) 12 mohm	CCN1321
R 7132	(A,61,72)	RS1/4SA0R0J
R 7133	(A,61,69)	RS1/4SA0R0J
R 7134	(B,56,64)	RS1/16SS0R0J
R 7135	(B,49,65)	RS1/16SS6R8J
R 7136	(B,48,76)	RS1/16SS6R8J
R 7202	(A,142,69)	RS1/16SS222J
R 7203	(A,141,70)	RS1/16SS222J
R 7206	(A,143,71)	RS1/16SS222J
R 7207	(A,143,73)	RS1/16SS222J
R 7211	(B,86,92)	RS1/8SQ0R0J
R 7212	(B,91,111)	RS1/8SQ0R0J
R 7213	(A,102,99)	RS1/16SS102J
R 7214	(A,94,78)	RS1/16SS102J
R 7215	(A,102,98)	RS1/16SS102J

Circuit Symbol and No.		Part No.	Circuit Symbol and No.		Part No.
R 7216	(A,94,77)	RS1/16SS102J	R 7385	(B,112,27)	RS1/16SS0R0J
R 7217	(A,102,97)	RS1/16SS102J	R 7386	(B,83,32)	RS1/16SS0R0J
R 7218	(A,93,101)	RS1/16SS152J	R 7387	(B,106,32)	RS1/16SS0R0J
R 7219	(A,94,76)	RS1/16SS102J	R 7388	(B,86,32)	RS1/16SS0R0J
R 7220	(A,87,80)	RS1/16SS152J	R 7389	(B,109,29)	RS1/16SS0R0J
R 7221	(A,102,96)	RS1/16SS102J	R 7390	(B,84,31)	RS1/16SS0R0J
R 7222	(A,94,75)	RS1/16SS102J	R 7391	(B,107,32)	RS1/16SS0R0J
R 7224	(A,93,102)	RS1/16SS3002D	R 7392	(B,87,31)	RS1/16SS101J
R 7225	(A,91,102)	RS1/16SS2701D	R 7393	(B,93,45)	RS1/16SS0R0J
R 7227	(A,88,104)	RS1/16SS8201D	R 7394	(B,86,30)	RS1/16SS0R0J
R 7229	(A,87,81)	RS1/16SS3002D	R 7397	(B,128,32)	RS1/16SS0R0J
R 7230	(A,85,81)	RS1/16SS2701D	R 7398	(B,92,31)	RS1/16SS0R0J
R 7232	(A,83,84)	RS1/16SS8201D	R 7399	(B,129,32)	RS1/16SS0R0J
R 7233	(A,94,113)	RS1/16SS0R0J	R 7400	(B,91,31)	RS1/16SS0R0J
R 7234	(A,88,92)	RS1/16SS0R0J	R 7401	(B,90,31)	RS1/16SS0R0J
R 7235	(A,90,103)	RS1/16SS752J	R 7403	(B,91,43)	RS1/16SS0R0J
R 7236	(A,84,82)	RS1/16SS103J	R 7405	(B,92,45)	RS1/16SS0R0J
R 7237	(B,107,103) 0.047 ohm	CCN1167	R 7407	(B,130,32)	RS1/16SS0R0J
R 7238	(B,101,83) 0.047 ohm	CCN1167	R 7408	(B,93,43)	RS1/16SS0R0J
R 7245	(A,103,104)	RS1/16SS1001D	R 7419	(B,140,47)	RS1/16SS0R0J
R 7246	(A,97,84)	RS1/16SS0R0J	R 7420	(B,139,44)	RS1/16SS0R0J
R 7247	(A,102,101)	RS1/16SS224J	R 7425	(B,141,44) (A)	RS1/16SS221J
R 7248	(A,96,81)	RS1/16SS224J	R 7426	(B,142,44) (A)	RS1/16SS221J
R 7249	(A,104,104)	RS1/16SS1202D	R 7428	(B,143,43) (A)	RS1/16SS0R0J
R 7250	(A,98,84)	RS1/16SS2202D	R 7430	(B,143,45) (A)	RS1/16SS221J
R 7251	(A,104,103)	RS1/16SS104J	R 7433	(B,145,45)	RS1/16SS0R0J
R 7252	(A,98,82)	RS1/16SS104J	R 7435	(B,146,46)	RS1/16SS0R0J
R 7253	(A,111,103)	RS1/16SS0R0J	R 7437	(B,148,46)	CTF1645
R 7254	(A,105,83)	RS1/16SS0R0J	R 7439	(B,118,31)	RS1/16SS103J
R 7302	(A,126,43)	RS1/10SR0R0J	R 7440	(B,150,44)	RS1/16SS0R0J
R 7303	(A,123,42)	RS1/10SR0R0J	R 7441	(B,150,43)	RS1/16SS0R0J
R 7306	(B,125,43)	RS1/16SS0R0J	R 7442	(B,119,32)	RS1/16SS0R0J
R 7307	(B,90,48)	RS1/10SR0R0J	R 7443	(B,126,31)	RS1/16SS0R0J
R 7308	(B,126,45)	RS1/16SS0R0J	R 7444	(B,125,30)	RS1/16SS0R0J
R 7309	(B,91,45)	RS1/16SS0R0J	R 7445	(B,124,30)	RS1/16SS0R0J
R 7310	(B,126,43)	RS1/16SS0R0J	R 7446	(B,123,30)	RS1/16SS0R0J
R 7311	(B,127,45)	RS1/16SS0R0J	R 7447	(B,121,30)	RS1/16SS0R0J
R 7315	(B,128,45)	RS1/16SS0R0J	R 7448	(B,121,31)	RS1/16SS0R0J
R 7317	(B,129,43)	RS1/16SS0R0J	R 7449	(B,120,30)	RS1/16SS0R0J
R 7323	(B,129,45)	RS1/16SS0R0J	R 7456	(B,82,29)	RS1/16SS103J
R 7325	(B,130,43)	RS1/16SS0R0J	R 7457	(B,112,29)	RS1/16SS103J
R 7327	(B,131,47)	RS1/16SS0R0J	R 7458	(B,113,30)	RS1/16SS103J
R 7329	(B,131,43)	RS1/16SS0R0J	R 7459	(B,114,30)	RS1/16SS103J
R 7330	(B,131,45)	RS1/16SS0R0J	R 7460	(B,115,31)	RS1/16SS103J
R 7331	(B,133,43)	RS1/16SS0R0J	R 7461	(B,116,31)	RS1/16SS103J
R 7333	(B,132,43)	RS1/16SS0R0J	R 7463	(B,149,45)	RS1/16SS0R0J
R 7335	(B,132,32)	RS1/16SS0R0J	R 7470	(B,111,31)	RS1/16SS0R0J
R 7338	(B,130,29)	RS1/16SS0R0J	R 7482	(B,53,113) (A)	RS1/16SS0R0J
R 7340	(B,130,26)	RS1/16SS0R0J	R 7483	(B,53,111) (A)	RS1/16SS0R0J
R 7341	(B,136,45)	RS1/16SS0R0J	R 7484	(B,127,24)	RS1/16SS104J
R 7342	(B,131,27)	RS1/16SS0R0J	R 7503	(B,125,27)	RS1/16SS103J
R 7343	(B,137,44)	RS1/16SS0R0J	R 7504	(B,124,27)	RS1/16SS103J
R 7344	(B,133,31)	RS1/16SS0R0J	R 7505	(B,121,27)	RS1/16SS103J
R 7345	(B,137,45)	RS1/16SS0R0J	R 7506	(B,120,27)	RS1/16SS103J
R 7350	(B,129,27)	RS1/16SS0R0J	R 7507	(B,119,27)	RS1/16SS103J
R 7356	(B,95,32)	RS1/16SS0R0J	R 7515	(A,119,32)	RS1/16SS0R0J
R 7357	(B,129,29)	RS1/16SS0R0J	R 7516	(A,120,30)	RS1/16SS0R0J
R 7362	(B,110,30) (A,B,C)	RS1/16SS0R0J	R 7517	(A,121,30)	RS1/16SS0R0J
R 7364	(B,109,32) (A,B,C)	RS1/16SS0R0J	R 7518	(A,123,30)	RS1/16SS0R0J
R 7376	(B,117,43)	RS1/10SR0R0J	R 7519	(A,124,30)	RS1/16SS0R0J

Circuit Symbol and No.		Part No.
R 7520	(A,125,30)	RS1/16SS0R0J
R 7521	(A,126,29)	RS1/16SS0R0J
R 7522	(A,114,39)	RS1/16SS680J
R 7523	(A,95,39)	RS1/16SS680J
R 7524	(A,91,39)	RS1/16SS330J
R 7525	(B,163,46)	RS1/16SS680J
R 7526	(B,158,46)	RS1/16SS680J
R 7527	(A,146,48)	RS1/16SS680J
R 7528	(B,90,10)	RS1/16SS221J
R 7530	(B,89,14)	RS1/16SS330J
R 7531	(A,114,38)	RS1/16SS680J
R 7532	(A,107,39)	RS1/16SS680J
R 7533	(A,93,39)	RS1/16SS680J
R 7534	(B,161,46)	RS1/16SS680J
R 7535	(A,144,48)	RS1/16SS680J
R 7537	(B,162,47)	RS1/16SS103J
R 7538	(B,160,47)	RS1/16SS103J
R 7539	(B,157,47)	RS1/16SS103J
R 7540	(A,145,50)	RS1/16SS103J
R 7541	(A,144,50)	RS1/16SS103J
R 7544	(A,141,50)	RS1/16SS0R0J
R 7545	(A,88,41)	RS1/16SS0R0J
R 7601	(B,153,27)	RS1/16SS221J
R 7603	(B,157,26)	RS1/16SS0R0J
R 7604	(B,152,28)	RS1/16SS102J
R 7605	(B,154,28)	RS1/16SS102J
R 7606	(B,150,28)	RS1/16SS102J
R 7607	(B,160,34)	RS1/16SS103J
R 7609	(B,136,29)	RS1/16SS0R0J
R 7610	(B,141,30)	RS1/16SS330J
R 7611	(B,138,32)	RS1/16SS330J
R 7612	(B,145,28)	RS1/16SS330J
R 7613	(B,140,49)	RS1/16SS221J
R 7614	(B,135,48)	RS1/16SS0R0J
R 7615	(B,132,54)	RS1/16SS330J
R 7616	(B,132,52)	RS1/16SS330J
R 7617	(B,133,50)	RS1/16SS330J
R 7618	(B,138,31)	RS1/16SS103J
R 7619	(B,135,59)	RS1/16SS103J
R 7621	(B,160,23)	RS1/16SS821J
R 7622	(B,163,23)	RS1/16SS821J
R 7623	(B,143,19)	RS1/16SS821J
R 7624	(B,147,19)	RS1/16SS821J
R 7625	(B,149,51)	RS1/16SS821J
R 7626	(B,149,56)	RS1/16SS821J
R 7628	(B,161,22)	RS1/16SS0R0J
R 7631	(B,144,18)	RS1/16SS0R0J
R 7634	(B,150,54)	RS1/16SS0R0J
R 7639	(B,136,31)	RS1/16SS0R0J
R 7640	(B,157,21)	RS1/16SS0R0J
R 7702	(B,28,51)	RS1/16SS103J
R 7703	(B,27,50)	RS1/16SS103J
R 7704	(A,36,40)	RS1/16SS222J
R 7707	(A,5,114)	RS1/16SS0R0J
R 7708	(B,28,22)	RS1/16SS101J
R 7709	(B,21,28)	RS1/10SR0R0J
R 7710	(B,29,25)	RS1/16SS101J
R 7712	(B,16,25)	RS1/16SS0R0J
R 7713	(B,17,25)	RS1/16SS0R0J
R 7714	(B,26,40)	RS1/16SS102J

Circuit Symbol and No.		Part No.
R 7715	(B,26,33)	RS1/16SS0R0J
R 7716	(B,49,33)	RS1/16SS103J
R 7717	(B,13,14)	RS1/16SS102J
R 7718	(B,12,14)	RS1/16SS102J
R 7719	(B,49,40)	RS1/16SS103J
R 7724	(B,49,39)	RS1/16SS103J
R 7728	(A,33,38)	RS1/16SS0R0J
R 7729	(B,13,23)	RS1/16SS0R0J
R 7730	(B,52,42)	RS1/16SS222J
R 7734	(A,26,35)	RS1/16SS223J
R 7735	(A,26,36)	RS1/16SS223J
R 7737	(B,25,35)	RS1/16SS222J
R 7738	(B,23,35)	RS1/16SS332J
R 7739	(B,46,41)	RS1/16SS0R0J
R 7744	(A,26,33)	RS1/16SS223J
R 7745	(B,38,51)	RS1/16SS333J
R 7746	(B,37,50)	RS1/16SS473J
R 7749	(B,28,48)	RS1/16SS101J
R 7756	(B,139,70)	RS1/16SS103J
R 7757	(B,137,64)	RS1/16SS220J
R 7758	(B,141,61)	RS1/16SS220J
R 7759	(A,34,35)	RS1/16SS0R0J
R 7760	(A,48,31)	RS1/16SS0R0J
R 7761	(A,55,41)	RS1/16SS0R0J
R 7762	(B,30,22)	RS1/16SS222J
R 7763	(A,51,31)	RS1/16SS0R0J
R 7764	(A,37,50)	RS1/16SS0R0J
R 7765	(A,50,36)	RS1/16SS101J
R 7766	(B,52,39)	RS1/16SS471J
R 7767	(B,52,40)	RS1/16SS470J
R 7768	(B,52,37)	RS1/16SS470J
R 7769	(B,52,38)	RS1/16SS471J
R 7770	(B,52,41)	RS1/16SS470J
R 7774	(A,5,96)	RS1/16SS0R0J
R 7775	(B,26,43)	RS1/16SS0R0J
R 7776	(B,30,37)	RS1/16SS0R0J
R 7777	(A,27,37)	RS1/16SS0R0J
R 7778	(B,45,45)	RS1/16SS0R0J
R 7780	(B,40,49)	RS1/16SS223J
R 7781	(B,50,47)	RS1/16SS223J
R 7782	(B,49,46)	RS1/16SS0R0J
R 7783	(B,52,50)	RS1/16SS472J
R 7784	(B,50,49)	RS1/16SS163J
R 7785	(A,49,50)	RS1/16SS101J
R 7786	(B,42,51)	RS1/16SS0R0J
R 7787	(A,7,110)	RS1/16SS333J
R 7789	(A,4,103)	RS1/16SS103J
R 7791	(A,4,100)	RS1/16SS824J
R 7792	(A,7,100)	RS1/16SS563J
R 7793	(A,21,44)	RS1/16SS0R0J
R 7794	(A,11,105)	RS1/16SS0R0J
R 7795	(A,8,113)	RS1/16SS472J
R 7797	(B,42,47)	RS1/16SS153J
R 7798	(A,27,29)	RS1/16SS223J
R 7804	(A,26,31)	RS1/16SS0R0J
R 7805	(A,12,109)	RS1/16SS102J
R 7806	(A,11,113)	RS1/16SS102J
R 7811	(B,9,25)	RS1/16SS0R0J
R 7814	(B,44,39)	RS1/16SS0R0J
R 7820	(A,14,28)	RS1/16SS0R0J

Circuit Symbol and No.		Part No.	Circuit Symbol and No.		Part No.
R 7821	(A,45,53)	RS1/16SS0R0J	R 7995	(A,89,66)	RS1/16SS270J
R 7822	(B,26,41)	RS1/16SS0R0J	R 8001	(B,116,103)	RS1/16SS0R0J
R 7823	(B,38,48)	RS1/16SS273J	R 8002	(B,118,103)	RS1/16SS0R0J
R 7826	(B,34,48)	RS1/16SS0R0J	R 8003	(B,119,101)	RS1/16SS151J
R 7827	(A,41,53)	RS1/16SS0R0J	R 8004	(B,117,100)	RS1/16SS151J
R 7832	(A,48,22)	RS1/10SR0R0J	R 8006	(A,117,93)	RS1/16SS103J
R 7833	(A,45,29)	RS1/10SR0R0J	R 8007	(A,117,92)	RS1/16SS102J
R 7834	(B,40,47)	RS1/16SS223J	R 8008	(B,115,103)	RS1/16SS102J
R 7836	(B,14,26)	RS1/16SS0R0J	R 8009	(B,114,98)	RS1/16SS473J
R 7838	(B,11,25)	RS1/10SR0R0J	R 8010	(B,114,99)	RS1/16SS473J
R 7839	(B,11,22)	RS1/10SR0R0J	R 8011	(A,108,81)	RS1/16SS223J
R 7881	(B,60,19)	RS1/16SS0R0J	R 8012	(A,108,79)	RS1/16SS433J
R 7882	(B,59,17)	RS1/16SS0R0J	R 8013	(A,121,57)	RS1/16SS0R0J
R 7901	(B,76,73)	RS1/16SS151J	R 8014	(A,116,56)	RS1/16SS0R0J
R 7902	(B,74,71)	RS1/16SS151J	R 8015	(B,120,70)	RS1/16SS0R0J
R 7903	(B,73,64)	RS1/16SS151J	R 8016	(A,121,53)	RS1/16SS0R0J
R 7907	(B,63,54)	RS1/16SS151J	R 8017	(A,113,79)	RS1/16SS273J
R 7908	(B,65,54)	RS1/16SS151J	R 8018	(B,106,70)	RS1/16SS102J
R 7909	(B,66,54)	RS1/16SS151J	R 8019	(B,120,69)	RS1/16SS271J
R 7910	(A,66,56)	RS1/16SS151J	R 8021	(B,120,68)	RS1/16SS0R0J
R 7911	(B,81,63)	RS1/4SA0R0J	R 8022	(B,106,68)	RS1/16SS105J
R 7912	(B,81,61)	RS1/4SA0R0J	R 8024	(A,118,67)	RS1/16SS333J
R 7913	(B,81,59)	RS1/4SA0R0J	R 8025	(A,119,67)	RS1/16SS333J
R 7916	(B,79,73)	RS1/16SS1500D	R 8026	(B,122,67)	RS1/16SS330J
R 7918	(B,75,83)	RS1/16SS0R0J	R 8027	(A,117,62)	RS1/16SS333J
R 7919	(B,79,67)	RS1/16SS1500D	R 8028	(A,118,64)	RS1/16SS333J
R 7920	(B,82,69)	RS1/16SS472J	R 8029	(B,122,65)	RS1/16SS330J
R 7921	(B,82,55)	RS1/16SS473J	R 8031	(A,108,60)	RS1/16SS103J
R 7923	(B,82,67)	RS1/16SS101J	R 8032	(A,107,62)	RS1/16SS0R0J
R 7924	(B,83,67)	RS1/16SS101J	R 8033	(B,122,64)	RS1/16SS330J
R 7925	(A,84,71)	RS1/16SS821J	R 8035	(B,120,63)	RS1/16SS0R0J
R 7926	(A,84,69)	RS1/16SS105J	R 8036	(A,105,62)	RS1/16SS472J
R 7927	(B,74,95)	RS1/16SS104J	R 8037	(B,122,62)	RS1/16SS101J
R 7928	(B,73,79)	RS1/10SR0R0J	R 8038	(A,124,52)	RS1/16SS473J
R 7929	(B,70,90)	RS1/16SS104J	R 8040	(A,123,52)	RS1/16SS473J
R 7930	(A,92,68)	RS1/16SS221J	R 8041	(A,125,52)	RS1/16SS473J
R 7932	(B,70,65)	RS1/16SS0R0J	R 8042	(B,106,62)	RAB4CQ220J
R 7933	(B,72,74)	RS1/16SS104J	R 8043	(B,106,59)	RAB4CQ220J
R 7942	(B,58,51)	RS1/16SS273J	R 8044	(B,111,57)	RAB4CQ220J
R 7943	(B,58,50)	RS1/16SS273J	R 8045	(B,114,57)	RAB4CQ220J
R 7945	(A,90,69)	RS1/16SS103J	R 8046	(A,121,75)	RS1/16SS472J
R 7951	(A,90,71)	RS1/16SS101J	R 8052	(B,104,65)	RS1/16SS100J
R 7955	(A,98,62)	RS1/16SS104J	R 8057	(A,128,74)	RS1/16SS821J
R 7956	(A,99,59)	RAB4CQ151J	R 8058	(A,128,73)	RS1/16SS0R0J
R 7957	(A,99,57)	RAB4CQ151J	R 8059	(A,128,71)	RS1/16SS821J
R 7958	(A,90,60)	RAB4CQ391J	R 8061	(B,121,58)	RAB4CQ221J
R 7959	(A,90,57)	RAB4CQ391J	R 8065	(B,123,72)	RS1/16SS0R0J
R 7968	(A,98,61)	RS1/16SS221J	R 8066	(B,127,68)	RS1/16SS0R0J
R 7977	(A,98,65)	RS1/16SS151J	R 8070	(A,117,71)	RS1/16SS222J
R 7982	(B,62,46)	RS1/16SS101J	R 8071	(A,112,79)	RS1/16SS0R0J
R 7983	(B,66,46)	RS1/16SS101J	R 8201	(B,75,22)	RS1/16SS0R0J
R 7984	(A,66,47)	RS1/16SS101J	R 8202	(B,140,15)	RS1/16SS0R0J
R 7985	(A,62,47)	RS1/16SS101J	R 8203	(B,74,23)	RS1/16SS0R0J
R 7986	(B,63,34)	RS1/16SS75R0D	R 8205	(B,73,22)	RS1/16SS0R0J
R 7987	(B,66,34)	RS1/16SS75R0D	R 8209	(B,88,125)	RS1/10SR0R0J
R 7988	(A,65,35)	RS1/16SS75R0D	R 8210	(B,77,123)	RS1/10SR0R0J
R 7989	(A,61,35)	RS1/16SS75R0D	R 8216	(B,72,16)	RS1/16SS0R0J
R 7991	(B,57,25)	RS1/16SS0R0J	R 8218	(B,71,19)	RS1/16SS0R0J
R 7992	(B,57,46)	RS1/16SS0R0J	R 8220	(B,70,16)	RS1/16SS0R0J
R 7994	(B,76,68)	RS1/16SS0R0J	R 8222	(B,68,19)	RS1/16SS0R0J

Circuit Symbol and No.	Part No.
R 8223 (B,68,17)	RS1/16SS0R0J
R 8227 (B,66,16)	RS1/16SS0R0J
R 8228 (B,65,18)	RS1/16SS0R0J
R 8229 (B,65,16)	RS1/16SS0R0J
R 8231 (B,64,18)	RS1/16SS0R0J
R 8232 (B,64,16)	RS1/16SS0R0J
R 8233 (B,63,18)	RS1/16SS0R0J
R 8235 (B,62,16)	RS1/16SS0R0J
R 8236 (B,62,18)	RS1/16SS0R0J
R 8237 (B,61,16)	RS1/16SS0R0J
R 8241 (B,59,19)	RS1/16SS0R0J
R 8242 (B,58,17)	RS1/16SS0R0J
R 8243 (B,57,20)	RS1/16SS0R0J
R 8244 (B,56,18)	RS1/16SS0R0J
R 8245 (B,56,20)	RS1/16SS0R0J
R 8249 (B,53,22) (A)	RS1/16SS0R0J
R 8250 (B,52,20) (A)	RS1/16SS0R0J
R 8251 (B,51,22) (A)	RS1/16SS0R0J
R 8254 (B,50,19) (A)	RS1/16SS0R0J
R 8255 (B,49,19) (A)	RS1/16SS0R0J
R 8304 (B,156,15)	RS1/16SS471J
R 8305 (B,155,17)	RS1/16SS471J
R 8306 (B,155,15)	RS1/16SS0R0J
R 8307 (B,164,18)	RS1/16SS0R0J
R 8308 (B,163,18)	RS1/16SS0R0J
R 8309 (B,161,17)	RS1/16SS0R0J
R 8310 (B,160,17)	RS1/16SS0R0J
R 8311 (B,159,18)	RS1/16SS0R0J
R 8312 (B,158,18)	RS1/16SS0R0J
R 8313 (B,158,17)	RS1/16SS0R0J
R 8314 (B,157,17)	RS1/16SS0R0J
R 8315 (B,154,18)	RS1/16SS102J
R 8316 (B,153,17)	RS1/16SS102J
R 8317 (B,153,15)	RS1/16SS102J
R 8322 (B,151,17)	RS1/16SS0R0J
R 8323 (B,150,15)	RS1/16SS0R0J
R 8333 (B,146,16)	RS1/16SS0R0J
R 8334 (B,145,16)	RS1/16SS0R0J
R 8336 (B,144,15)	RS1/16SS0R0J
R 8337 (B,143,16)	RS1/16SS0R0J
R 8340 (B,141,16)	RS1/16SS0R0J
R 8341 (B,138,16)	RS1/16SS0R0J
R 8342 (B,69,98)	RS1/16SS0R0J
R 8343 (B,68,98)	RS1/16SS0R0J
R 8344 (B,67,98)	RS1/16SS0R0J
R 8345 (B,66,98)	RS1/16SS0R0J
R 8346 (B,65,98)	RS1/16SS0R0J
R 8347 (B,64,98)	RS1/16SS0R0J
R 8360 (B,130,13)	RS1/16SS0R0J
R 8401 (B,128,15)	RS1/16SS0R0J
R 8402 (B,130,16)	RS1/16SS0R0J
R 8403 (B,129,14)	RS1/16SS0R0J
R 8404 (B,122,20)	RS1/16SS0R0J
R 8408 (B,122,22)	RS1/16SS0R0J
R 8414 (B,118,25)	RS1/16SS0R0J
R 8415 (B,117,23)	RS1/16SS0R0J
R 8416 (B,117,28)	RS1/16SS0R0J
R 8417 (B,116,20)	RS1/16SS0R0J
R 8418 (B,116,23)	RS1/16SS0R0J
R 8419 (B,115,25)	RS1/16SS0R0J

Circuit Symbol and No.	Part No.
R 8420 (B,114,20)	RS1/16SS0R0J
R 8421 (B,114,22)	RS1/16SS0R0J
R 8422 (B,114,24)	RS1/16SS0R0J
R 8423 (B,113,25)	RS1/16SS0R0J
R 8446 (B,100,22)	RS1/16SS0R0J
R 8447 (B,99,23)	RS1/16SS0R0J
R 8449 (B,98,24)	RS1/16SS0R0J
R 8450 (B,97,24)	RS1/16SS0R0J
R 8451 (B,97,23)	RS1/16SS0R0J
R 8452 (B,96,23)	RS1/16SS0R0J
R 8453 (B,93,24)	RS1/16SS0R0J
R 8454 (B,94,21)	RS1/16SS0R0J
R 8456 (B,120,22)	RS1/8SQ0R0J
R 8458 (B,101,21)	RS1/8SQ0R0J
R 8460 (B,93,20)	RS1/8SQ0R0J
R 8461 (B,88,29)	RS1/16SS0R0J
R 8501 (A,139,94)	RS1/16SS473J
R 8503 (A,138,94)	RS1/16SS472J
R 8509 (A,15,87) (A,B,C)	RS1/16SS101J
R 8510 (A,6,86) (A,B,C)	RS1/16SS103J
R 8511 (A,17,90) (A,B,C)	RS1/16SS0R0J
R 8512 (B,143,90)	RS1/16SS0R0J
R 8514 (A,4,90) (A,B,C)	RS1/16SS0R0J
R 8517 (A,10,89) (A,B,C)	RS1/16SS104J
R 8520 (A,43,105) (A)	RS1/16SS473J
R 8525 (A,33,111) (A)	RS1/16SS104J
R 8526 (A,45,114) (A)	RS1/16SS471J
R 8528 (A,38,107) (A)	RS1/16SS473J
R 8529 (A,43,113) (A)	RS1/16SS223J
R 8530 (A,46,114) (A)	RS1/16SS223J
R 8533 (A,33,106) (A)	RS1/16SS331J
R 8534 (A,43,114) (A)	RS1/16SS181J
R 8535 (A,47,112) (A)	RS1/16SS181J
R 8541 (A,35,113) (A)	RS1/10SR102J
R 8542 (A,40,112) (A)	RS1/10SR102J
R 8547 (A,53,119) (A)	RS1/10SR0R0J
R 8548 (B,48,118) (A)	VTL1133
R 8549 (B,33,118) (A)	VTL1133
R 8550 (B,47,118) (A)	VTL1133
R 8551 (B,42,118) (A)	VTL1133
R 8552 (B,40,118) (A)	VTL1133
R 8553 (B,37,118) (A)	VTL1133
R 8565 (A,6,116)	VTL1134
R 8566 (A,10,116)	RS1/16SS0R0J
R 8581 (A,140,90)	RS1/16SS103J
R 8582 (A,142,94)	RS1/16SS103J
R 8585 (B,54,123) (A,B,C)	RS1/16SS102J
R 8586 (B,57,123) (A,B,C)	RS1/16SS102J
R 8603 (A,10,5)	RS1/16SS0R0J
R 8604 (A,32,13)	RS1/16SS0R0J
R 8608 (A,16,8)	RS1/16SS273J
R 8613 (A,16,10)	RS1/16SS473J
R 8614 (A,21,5)	RS1/16SS621J
R 8616 (A,28,7)	RS1/16SS222J
R 8617 (A,28,6)	RS1/16SS0R0J
R 8618 (A,25,9)	RS1/16SS104J
R 8619 (A,15,11)	RS1/16SS104J
R 8620 (A,47,15)	RS1/16SS0R0J
R 8626 (A,31,8)	RS1/16SS0R0J
R 8627 (A,31,20)	RS1/16SS0R0J

Circuit Symbol and No.		Part No.
R 8701	(A,127,95)	RS1/16SS0R0J
R 8709	(A,135,95) (A)	RS1/16SS0R0J
R 8710	(A,135,93) (B)	RS1/16SS0R0J
R 8713	(A,135,87) (D,E,F,G)	RS1/16SS0R0J
R 8715	(A,135,83) (C)	RS1/16SS0R0J
R 8803	(A,87,78)	RS1/10SR0R0J

CAPACITORS

Circuit Symbol and No.		Part No.
C 7006	(A,72,108)	CKSQYB334K50
C 7013	(B,70,117)	CEVW220M16
C 7014	(B,51,118) (A)	CKSRYB104K50
C 7018	(A,8,35)	CKSRYB105K10
C 7021	(A,121,47) 4.7 uF	CCG1212
C 7023	(A,7,33) 4.7 uF	CCG1212
C 7029	(A,117,51) 4.7 uF	CCG1212
C 7032	(A,85,44)	CKSRYB105K10
C 7033	(A,80,44)	CKSRYB105K10
C 7036	(A,111,44)	CKSRYB105K10
C 7039	(A,111,45)	CKSSYB473K16
C 7042	(A,16,35)	CKSSYB104K10
C 7043	(A,119,44)	CKSSYB104K10
C 7045	(B,27,69)	CCSSCH561J50
C 7046	(A,31,71) 10 uF/16 V	DCH1263
C 7047	(A,31,72) 10 uF/16 V	DCH1263
C 7048	(A,31,74) 10 uF/16 V	DCH1263
C 7049	(A,31,76)	CKSSYB104K16
C 7052	(B,28,85)	CKSSYB104K16
C 7053	(A,22,78) 10 uF	CCG1236
C 7055	(B,25,72)	CKSSYB103K16
C 7056	(B,26,71)	CCSSCH8R0D50
C 7057	(B,31,72)	CKSSYB103K16
C 7058	(B,25,71)	CKSSYB152K50
C 7059	(B,26,72)	CKSRYB105K16
C 7060	(A,22,76) 10 uF	CCG1236
C 7061	(A,22,74) 10 uF	CCG1236
C 7074	(A,70,88)	CKSRYB105K10
C 7078	(A,40,93) 2.2 uF	CCG1218
C 7081	(A,40,90)	CCG1320
C 7086	(A,67,85) 10 uF	CCG1192
C 7101	(B,57,76)	CCSSCH150J50
C 7102	(B,59,75)	CCSSCH220J50
C 7103	(B,60,77)	CKSSYB152K50
C 7104	(B,57,65)	CCSSCH150J50
C 7105	(B,59,66)	CCSSCH220J50
C 7106	(B,56,73)	CCSSCH102J50
C 7107	(B,60,65)	CKSSYB472K50
C 7108	(B,56,68)	CCSSCH102J50
C 7109	(B,58,56)	CKSSYB103K16
C 7110	(B,51,76)	CKSSYB222K50
C 7111	(B,54,65)	CKSSYB153K16
C 7112	(B,47,71)	CKSRYB104K50
C 7113	(B,45,77)	CKSRYB104K50
C 7114	(B,46,62)	CKSRYB104K50
C 7115	(B,45,70) 4.7 uF	CCG1201
C 7116	(A,39,75) 10 uF	CCG1236
C 7117	(A,40,66) 10 uF	CCG1236
C 7121	(A,56,75) 47 uF	CCG1229
C 7122	(A,56,69) 47 uF	CCG1229
C 7124	(A,56,72) 47 uF	CCG1229
C 7125	(A,56,66) 47 uF	CCG1229
C 7201	(A,142,66)	CKSSYB104K10
C 7202	(A,145,66)	CKSSYB104K10
C 7204	(A,146,70)	CKSSYB104K10
C 7207	(B,88,87) 10 uF	CCG1236
C 7208	(B,88,89) 10 uF	CCG1236
C 7209	(B,94,109) 10 uF	CCG1236
C 7210	(B,94,107) 10 uF	CCG1236
C 7211	(A,91,101)	CCSSCH471J50
C 7212	(A,85,80)	CCSSCH471J50
C 7213	(B,102,99)	CEVW101M16
C 7214	(B,94,78)	CEVW101M16
C 7215	(A,91,103)	CCSSCH270J50
C 7216	(A,86,83)	CCSSCH270J50
C 7217	(B,105,103)	CKSSYB104K10
C 7218	(B,99,82)	CKSSYB104K10
C 7219	(A,90,104)	CKSSYB222K50
C 7220	(A,84,83)	CCSSCH821J50
C 7221	(A,95,112)	CKSRYB104K50
C 7222	(A,89,91)	CKSRYB104K50
C 7223	(A,90,106)	CKSRYB105K10
C 7224	(A,84,85)	CKSRYB105K10
C 7225	(B,103,104) 22 uF	CCG1254
C 7226	(B,97,84) 22 uF	CCG1254
C 7229	(A,103,109)	CKSSYB104K16
C 7230	(A,103,106)	CKSSYB104K16
C 7231	(A,103,101)	CKSSYB102K50
C 7232	(A,101,101)	CKSSYB472K50
C 7233	(A,97,89)	CKSSYB104K16
C 7234	(A,97,86)	CKSSYB104K16
C 7235	(A,97,81)	CKSSYB102K50
C 7236	(A,95,81)	CKSSYB472K50
C 7301	(B,79,44) 22 uF	DCH1256
C 7303	(A,124,38)	CKSSYB104K10
C 7305	(B,85,47) 22 uF	DCH1256
C 7306	(A,127,40)	CKSSYB104K10
C 7501	(B,127,26)	CKSSYB104K10
C 7502	(B,86,13)	CKSSYB104K10
C 7503	(A,103,38) 10 uF	CCG1192
C 7504	(A,155,49) 10 uF	CCG1192
C 7505	(A,103,37)	CKSSYB104K10
C 7506	(A,155,48)	CKSSYB104K10
C 7601	(B,164,35) 10 uF	CCG1192
C 7602	(B,146,23) 10 uF	CCG1192
C 7603	(B,141,59) 10 uF	CCG1192
C 7604	(B,164,33)	CKSSYB104K10
C 7605	(B,145,23)	CKSSYB104K10
C 7606	(B,140,58)	CKSSYB104K10
C 7607	(B,166,24)	CKSSYB104K10
C 7608	(B,137,20)	CKSSYB104K10
C 7609	(B,142,49)	CKSSYB104K10
C 7610	(B,166,23) 10 uF	CCG1192
C 7611	(B,138,18) 10 uF	CCG1192
C 7612	(B,144,50) 10 uF	CCG1192
C 7613	(B,160,22)	CKSSYB102K50
C 7614	(B,163,22)	CKSSYB102K50
C 7615	(B,143,18)	CKSSYB102K50
C 7616	(B,146,18)	CKSSYB102K50
C 7617	(B,149,53)	CKSSYB102K50
C 7618	(B,149,55)	CKSSYB102K50

Circuit Symbol and No.			Part No.
C 7701	(B,28,50)		CKSSYB471K50
C 7705	(B,25,26)	10 uF	CCG1192
C 7707	(A,23,41)		CCG1393
C 7708	(B,22,26)	10 uF	CCG1192
C 7710	(B,23,24)		CKSSYB104K10
C 7711	(B,27,22)		CKSSYB104K10
C 7712	(A,35,38)		CKSSYB104K10
C 7713	(A,36,36)		CKSSYB104K10
C 7714	(A,19,28)		CKSRYB105K10
C 7715	(A,13,24)		CKSRYB105K10
C 7717	(A,46,34)		CKSSYB104K10
C 7723	(B,49,42)	2.2 uF	CCG1218
C 7724	(B,23,37)	10 uF	CCG1192
C 7727	(B,25,34)		CKSSYB104K10
C 7728	(B,26,39)		CKSRYB105K10
C 7730	(A,44,50)		CCG1393
C 7732	(B,38,49)		CKSSYB561K50
C 7733	(B,37,51)		CCSSCH680J50
C 7736	(B,148,69)		CKSQYB225K16
C 7737	(B,149,66)	4.7 uF	CCG1201
C 7738	(B,147,65)		CKSSYB104K10
C 7739	(B,149,63)	10 uF	CCG1192
C 7740	(B,26,32)		CKSSYB104K10
C 7741	(B,146,61)	10 uF	CCG1192
C 7742	(B,153,66)		CKSSYB104K10
C 7743	(B,146,60)		CKSSYB104K10
C 7747	(A,43,48)		CKSSYB104K10
C 7748	(A,42,49)	2.2 uF	CCG1218
C 7749	(A,40,48)		CKSSYB104K10
C 7751	(A,38,52)	10 uF	CCG1192
C 7752	(A,51,42)		CKSSYB104K10
C 7753	(B,41,49)		CCSSCH120J50
C 7758	(A,36,42)		CCSSCH120J50
C 7759	(A,35,39)		CCSSCH120J50
C 7761	(A,38,49)		CCG1393
C 7762	(A,46,49)		CCG1393
C 7765	(B,51,46)		CKSRYB474K10
C 7766	(B,51,48)		CCSSCH101J50
C 7767	(B,51,49)		CCSSCH680J50
C 7768	(B,41,51)		CKSSYB104K10
C 7769	(A,7,111)		CCSSCH101J50
C 7770	(A,8,112)		CCG1393
C 7771	(A,4,105)		CCG1393
C 7772	(A,4,101)		CCSSCH6R0D50
C 7773	(A,6,100)		CCSSCH220J50
C 7774	(A,10,104)		CKSSYB104K10
C 7775	(A,19,29)		CKSRYB105K10
C 7779	(A,25,31)		CKSSYB104K10
C 7780	(A,11,108)	22 uF	DCH1256
C 7782	(A,48,48)		CCG1393
C 7783	(B,33,48)		CKSSYB104K10
C 7785	(B,135,63)		CCSSCH101J50
C 7786	(B,21,24)		CKSSYB104K10
C 7789	(B,41,45)	2.2 uF	CCG1218
C 7791	(A,4,107)		CKSSYB102K50
C 7793	(A,5,102)		CCSSCH6R0D50
C 7897	(B,71,67)		CKSRYB105K10
C 7898	(B,66,68)		CKSSYB104K10
C 7899	(B,66,66)		CKSSYB104K10
C 7909	(B,64,39)		CKSRYB105K10

Circuit Symbol and No.			Part No.
C 7910	(B,62,39)		CKSRYB105K10
C 7911	(B,67,39)		CKSRYB105K10
C 7912	(B,66,39)		CKSRYB105K10
C 7913	(A,64,40)		CKSRYB105K10
C 7914	(A,66,40)		CKSRYB105K10
C 7915	(A,60,41)		CKSRYB105K10
C 7916	(A,62,40)		CKSRYB105K10
C 7917	(A,64,57)	10 uF	CCG1192
C 7918	(B,75,71)		CKSRYB105K16
C 7919	(B,73,67)		CKSRYB105K16
C 7920	(B,74,61)		CKSRYB105K16
C 7921	(B,64,45)		CKSSYB104K10
C 7922	(B,67,45)		CKSSYB104K10
C 7923	(A,65,46)		CKSSYB104K10
C 7924	(A,61,47)		CKSSYB104K10
C 7925	(B,71,60)		CKSRYB105K16
C 7926	(A,73,64)		CCSSCH102J50
C 7927	(A,72,64)		CKSSYB104K10
C 7928	(B,72,58)		CKSRYB105K16
C 7929	(A,72,62)		CKSSYB103K16
C 7930	(A,72,61)		CKSSYB474K6R3
C 7931	(A,72,60)		CKSSYB474K6R3
C 7932	(B,73,56)		CKSRYB105K16
C 7933	(A,72,58)		CKSSYB104K10
C 7934	(A,73,58)		CCSSCH102J50
C 7935	(A,67,58)		CKSRYB105K16
C 7936	(A,71,66)	10 uF	CCG1192
C 7937	(A,73,61)		CKSSYB474K6R3
C 7939	(A,77,69)		CKSSYB104K10
C 7940	(A,77,68)		CCSSCH102J50
C 7941	(A,77,54)		CKSSYB104K10
C 7942	(A,79,54)		CKSSYB104K10
C 7944	(B,80,70)		CKSRYB105K16
C 7945	(A,78,72)	10 uF	CCG1192
C 7946	(A,80,69)		CKSSYB104K10
C 7947	(A,81,54)		CKSSYB104K10
C 7948	(A,81,70)		CKSSYB104K10
C 7949	(A,83,48)	10 uF	CCG1192
C 7950	(A,82,68)		CKSSYB104K10
C 7951	(A,83,53)		CKSSYB104K10
C 7952	(A,84,53)		CKSSYB104K10
C 7953	(A,77,43)	10 uF	CCG1192
C 7954	(A,86,71)		CCSSCH5R0C50
C 7955	(A,85,71)		CCSSCH6R0D50
C 7956	(A,88,64)		CKSSYB104K10
C 7957	(A,89,63)		CKSSYB104K10
C 7958	(A,90,68)		CKSSYB103K16
C 7963	(A,94,63)	1 uF	DCH1246
C 7965	(A,94,62)		CKSSYB103K16
C 7967	(A,91,66)		CCSSCH470J50
C 7968	(A,100,66)		CCSSCH150J50
C 7970	(B,64,50)		CKSSYB104K10
C 7971	(B,67,50)		CKSSYB104K10
C 7972	(A,64,51)		CKSSYB104K10
C 7973	(A,60,52)		CKSSYB104K10
C 7974	(A,95,69)	1 uF	DCH1246
C 7975	(A,95,68)		CKSSYB103K16
C 7979	(B,61,55)		CKSSYB104K10
C 7980	(B,56,48)	10 uF	CCG1192
C 7988	(B,73,91)		CKSRYB105K10

Circuit Symbol and No.		Part No.
C 7989	(B,74,91)	CKSRYB105K10
C 7990	(B,73,85)	CKSSYB104K10
C 7991	(A,71,74)	CKSSYB104K10
C 7994	(B,69,84)	CKSRYB105K10
C 7995	(B,70,84)	CKSRYB105K10
C 7996	(B,69,78)	CKSSYB104K10
C 7997	(B,71,77)	CKSSYB104K10
C 8000	(B,71,70)	CKSRYB105K10
C 8004	(B,109,71) 10 uF	CCG1192
C 8007	(B,116,101)	CCSSCH270J50
C 8008	(B,110,70)	CKSSYB104K10
C 8009	(B,116,97)	CCSSCH270J50
C 8012	(A,112,66)	CKSSYB104K10
C 8013	(A,114,66)	CKSSYB104K10
C 8014	(A,116,65)	CKSSYB104K10
C 8016	(B,105,70)	CCSSCH120J50
C 8017	(B,104,70)	CCSSCH150J50
C 8019	(A,111,65)	CKSSYB104K10
C 8023	(B,125,62)	CCSSCH470J50
C 8024	(A,111,62)	CKSSYB104K10
C 8025	(A,114,61)	CKSSYB104K10
C 8026	(A,116,63)	CKSSYB104K10
C 8028	(A,130,68) 10 uF	CCG1192
C 8029	(A,129,68)	CKSSYB104K10
C 8031	(A,124,71)	CKSSYB104K10
C 8032	(A,124,72) 10 uF	CCG1192
C 8033	(A,130,74)	CKSSYB102K50
C 8034	(A,130,72)	CKSSYB102K50
C 8205	(A,80,115) 10 uF	CCG1236
C 8208	(B,50,27) (A)	CKSSYB104K10
C 8501	(A,16,90) (A,B,C)	CKSSYB104K10
C 8503	(B,141,91)	CKSSYB104K10
C 8505	(A,5,90) (A,B,C)	CKSSYB104K10
C 8506	(A,41,107)	CKSSYB104K10
C 8507	(A,36,110)	CKSSYB104K10
C 8508	(A,34,107)	CKSSYB104K10
C 8512	(B,43,116) (A)	CCSRCH220J50
C 8517	(A,53,121) (A)	CKSRYB104K50
C 8520	(B,36,116) (A)	CCSRCH220J50
C 8521	(B,39,116) (A)	CCSRCH220J50
C 8522	(B,46,116) (A)	CCSRCH220J50
C 8523	(B,35,116) (A)	CCSRCH220J50
C 8524	(B,48,114) (A)	CCSRCH220J50
C 8525	(A,5,119)	CCSRCH470J50
C 8601	(A,14,8)	CCSSCH100D50
C 8602	(A,17,6)	CKSSYB104K16
C 8604	(A,26,6) 2.2 uF	CCG1218
C 8606	(A,28,9)	CKSSYB104K10
C 8607	(A,29,14)	CKSSYB104K10
C 8608	(A,13,9) 10 uF	CCG1192
C 8801	(B,107,121)	CCSRCH331J50
C 8813	(A,91,74)	CKSRYB102K50
C 8814	(A,95,70) 4.7 uF	CCG1201
C 8815	(A,113,52)	CCSSCH9R0D50
C 8816	(A,112,52)	CCSSCH9R0D50
C 8817	(A,110,52)	CCSSCH9R0D50
C 8818	(A,109,52)	CCSSCH9R0D50
C 8819	(A,108,52)	CCSSCH9R0D50
C 8820	(A,106,52)	CCSSCH9R0D50
C 8821	(A,105,52)	CCSSCH9R0D50

Circuit Symbol and No.		Part No.
C 8822	(A,104,52)	CCSSCH9R0D50
C 8823	(A,78,76)	CCSRCH121J50
C 8824	(A,69,31)	CCSRCH121J50
C 8825	(A,56,30)	CCSRCH121J50

C

Unit Number : CWX4717
Unit Name : DVD Core Unit

MISCELLANEOUS

IC 1002	(B,15,13)	Regulator IC	MM1886A50P
IC 1003	(B,40,14)	IC	S-1200B50-M5
IC 1004	(B,64,28)	IC	NJM2855DL1-33
IC 1251	(A,12,41)	IC	BA5839FP
IC 1401	(B,28,40)	Flash ROM Unit	CWW8811
IC 1402	(B,46,28)	Flash ROM Unit	CWW8812
IC 1480	(A,65,30)	RAM IC	M12L64164A-5TG2Y
IC 1501	(A,39,33)	IC	MN2DS0018MA
IC 1801	(B,46,10)	D/A Converter	PCM1753DBQ
IC 1953	(B,57,17)	IC	S-1135D12-A6
Q 1101	(B,13,59)	Bipolar Transistor	LSCR523UB
Q 1102	(B,14,56)	Bipolar Transistor	LSCR523UB
Q 1103	(B,10,62)	Transistor	2SB1132
Q 1104	(B,22,54)	Transistor	2SB1132
L 1501	(A,54,30)	Inductor	CTF1743
L 1511	(A,48,17)	Chip Beads	VTL1126
L 1902	(A,18,17)	Inductor	CTF1487
L 1903	(B,64,16)	Inductor	CTF1558
L 1904	(A,68,18)	Resistor	RS1/16SS0R0J
X 1501	(B,48,18)	Crystal Resonator	CSS1823
F 1001	(A,14,19)	Chip EMI Filter	DTF1106
F 1002	(B,64,18)	Chip EMI Filter	DTL1106
S 1	(A,47,55)	Lever Switch	CSN1090
S 3	(B,26,13)	Lever Switch	CSN1089
VR1101	(A,7,63)	Semi-fixed 6.8 kohm(B)	CCP1447
VR1102	(A,7,59)	Semi-fixed 15 kohm(B)	CCP1449
CN1101	(A,21,63)	Connector	CKS6631
CN1952	(A,42,11)	Connector	CKS6025

RESISTORS

R 1004	(B,12,20)	RS1/16SS4702F
R 1007	(B,12,21)	RS1/16SS6801F
R 1019	(B,34,7)	RS1/16SS101J
R 1025	(B,36,6)	RS1/16SS101J
R 1027	(A,40,18)	RS1/16SS101J
R 1101	(B,15,57)	RS1/16SS104J
R 1102	(B,11,56)	RS1/16SS104J
R 1103	(B,14,61)	RS1/16SS4300F
R 1104	(B,11,58)	RS1/16SS5100F
R 1105	(B,17,54)	RS1/16SS4300F
R 1106	(B,10,57)	RS1/16SS5600F
R 1109	(B,6,57)	RS1/16SS3R3J
R 1110	(B,16,54)	RS1/16SS3R3J
R 1111	(B,6,63)	RS1/10SR3R3J
R 1112	(B,5,58)	RS1/10SR3R3J
R 1113	(B,15,59)	RS1/10SR3R9J
R 1114	(B,19,57)	RS1/10SR3R3J
R 1115	(B,6,61)	RS1/10SR2R7J
R 1116	(B,6,62)	RS1/10SR2R7J
R 1117	(B,18,59)	RS1/10SR3R9J

Circuit Symbol and No.		Part No.
R 1118	(B,16,59)	RS1/10SR3R9J
R 1223	(A,42,50)	RS1/16SS561J
R 1225	(B,29,7)	RS1/16SS471J
R 1251	(A,6,48)	RS1/16SS333J
R 1252	(A,6,47)	RS1/16SS473J
R 1253	(A,6,46)	RS1/16SS333J
R 1254	(A,6,45)	RS1/16SS473J
R 1255	(A,22,48)	RS1/16SS183J
R 1256	(A,21,45)	RS1/16SS153J
R 1257	(B,8,37)	RS1/16SS221J
R 1258	(A,19,39)	RS1/16SS221J
R 1401	(B,34,28)	RS1/16SS221J
R 1402	(B,35,47)	RS1/16SS104J
R 1405	(B,55,35)	RS1/16SS104J
R 1406	(B,39,45)	RS1/16SS472J
R 1480	(A,73,24)	RAB4CQ560J
R 1481	(A,73,28)	RAB4CQ560J
R 1482	(A,73,32)	RAB4CQ560J
R 1483	(A,73,35)	RAB4CQ560J
R 1484	(A,73,39)	RAB4CQ560J
R 1485	(A,55,22)	RAB4CQ560J
R 1486	(A,56,27)	RAB4CQ560J
R 1487	(A,56,37)	RAB4CQ560J
R 1488	(A,56,40)	RAB4CQ560J
R 1489	(A,54,29)	RS1/16SS560J
R 1490	(A,73,21)	RS1/16SS560J
R 1501	(B,49,20)	RS1/16SS122J
R 1503	(B,47,20)	RS1/16SS105J
R 1504	(A,50,17)	RS1/16SS121J
R 1505	(A,46,18)	RS1/16SS101J
R 1506	(B,46,15)	RS1/16SS101J
R 1507	(B,44,17)	RS1/16SS101J
R 1508	(B,43,17)	RS1/16SS221J
R 1509	(A,21,34)	RS1/16SS102J
R 1510	(A,11,29)	RS1/16SS102J
R 1512	(A,55,31)	RS1/16SS470J
R 1513	(A,23,38)	RS1/16SS203J
R 1514	(A,25,40)	RS1/16SS183J
R 1516	(A,25,36)	RS1/16SS104J
R 1517	(B,58,22)	RS1/16SS103J
R 1518	(B,34,31)	RS1/16SS103J
R 1519	(A,25,43)	RS1/16SS102J
R 1522	(A,21,37)	RS1/16SS104J
R 1523	(A,23,37)	RS1/16SS221J
R 1524	(B,29,33)	RS1/16SS472J
R 1525	(A,25,44)	RS1/16SS103J
R 1526	(A,23,40)	RS1/16SS103J
R 1527	(A,35,48)	RS1/16SS682J
R 1528	(B,20,33)	RS1/16SS103J
R 1529	(B,35,21)	RS1/16SS103J
R 1530	(B,18,33)	RS1/16SS103J
R 1531	(B,34,30)	RS1/16SS103J
R 1533	(A,29,48)	RS1/16SS104J
R 1534	(B,29,48)	RS1/16SS221J
R 1535	(A,22,44)	RS1/16SS104J
R 1536	(B,32,48)	RS1/16SS104J
R 1537	(A,25,46)	RS1/16SS104J
R 1538	(A,56,35)	RS1/16SS104J
R 1539	(B,34,48)	RS1/16SS104J
R 1540	(A,26,46)	RS1/16SS221J

Circuit Symbol and No.		Part No.
R 1541	(A,26,45)	RS1/16SS221J
R 1542	(B,27,34)	RS1/16SS103J
R 1546	(A,33,48)	RS1/16SS682J
R 1601	(A,32,17)	RS1/16SS123J
R 1602	(A,32,18)	RS1/16SS123J
R 1603	(B,31,20)	RS1/16SS1002D
R 1604	(A,24,21)	RS1/16SS105J
R 1605	(A,22,23)	RS1/16SS105J
R 1670	(B,40,19)	RS1/16SS1002D
R 1671	(B,43,19)	RS1/16SS2402D
R 1672	(A,39,18)	RS1/16SS2000D
R 1674	(A,38,17)	RS1/16SS3002D
R 1801	(B,51,8)	RS1/16SS104J
R 1802	(B,53,8)	RS1/16SS104J
R 1803	(B,51,14)	RS1/16SS821J
R 1804	(B,53,14)	RS1/16SS821J
R 1982	(A,10,62)	RS1/16SS822J
R 1983	(B,41,19)	RS1/16SS1000D
R 1987	(B,43,20)	RS1/16SS0R0J
R 1990	(B,35,19)	RS1/16SS2000D
R 1991	(B,31,16)	RS1/16SS101J
R 1996	(B,36,13)	RS1/16SS2000D
R 1997	(B,36,10)	RS1/16SS101J
R 2002	(B,43,10)	RS1/16SS2000D
R 2003	(B,43,8)	RS1/16SS101J

CAPACITORS

C 1001	(B,43,13)	CKSRYB105K10
C 1002	(B,13,17)	CKSSYB104K16
C 1003	(B,16,18)	CKSSYB104K16
C 1004	(B,15,17) 4.7 uF	CCG1201
C 1005	(B,41,11)	CKSRYB105K16
C 1010	(B,60,23)	CKSQYB225K10
C 1011	(B,64,22)	CKSRYB105K10
C 1015	(A,26,7)	CKSSYB102K50
C 1016	(B,64,15)	CKSSYB102K50
C 1018	(B,14,21)	CKSSYB104K10
C 1040	(B,59,12)	CCSRCH821J50
C 1041	(B,19,12)	CCSRCH271J50
C 1101	(B,15,53) 10 uF	CCG1192
C 1104	(B,8,57)	CKSSYB104K10
C 1105	(B,18,54)	CKSSYB104K10
C 1106	(B,8,66)	CKSSYB103K16
C 1107	(B,26,53)	CKSSYB103K16
C 1108	(A,20,56)	CKSSYB103K16
C 1109	(A,7,57)	CKSRYB224K16
C 1110	(A,18,58)	CKSSYB103K16
C 1111	(A,9,66)	CKSRYB224K16
C 1112	(B,17,52) 22 uF	DCH1256
C 1113	(B,9,58) 22 uF	DCH1256
C 1210	(B,77,33)	CKSSYB104K16
C 1251	(B,13,41)	CEVW101M16
C 1252	(B,8,41) 4.7 uF	CCG1222
C 1253	(B,8,39)	CKSSYB104K16
C 1254	(A,6,37)	CKSSYB104K16
C 1255	(A,19,37)	CKSSYB104K16
C 1401	(B,34,27)	CKSSYB104K16
C 1403	(B,39,40)	CKSSYB104K10
C 1408	(B,58,27)	CKSSYB104K10

Circuit Symbol and No.			Part No.
C 1410	(B,34,29)		CKSSYB104K16
C 1480	(A,71,19)		CKSSYB104K10
C 1481	(A,73,22)		CKSSYB104K10
C 1482	(A,72,26)		CKSSYB104K10
C 1484	(A,73,30)		CKSSYB104K10
C 1485	(A,73,41)		CKSSYB104K10
C 1487	(A,58,29)		CKSSYB104K10
C 1488	(A,57,25)		CKSSYB104K10
C 1489	(A,65,17)	10 uF	CCG1192
C 1490	(A,66,18)		CKSSYB102K50
C 1501	(B,62,20)	10 uF	CCG1192
C 1502	(B,55,19)	10 uF	CCG1192
C 1503	(A,54,33)		CKSSYB104K10
C 1504	(A,54,24)		CKSSYB104K10
C 1505	(A,54,27)		CKSSYB104K10
C 1506	(B,53,34)		CKSSYB104K10
C 1507	(A,54,36)		CKSSYB104K10
C 1508	(A,54,38)		CKSSYB104K10
C 1509	(A,54,42)		CKSSYB104K10
C 1510	(B,51,18)		CCSSCH120J50
C 1511	(A,49,18)		CKSSYB104K10
C 1512	(B,46,18)		CCSSCH120J50
C 1513	(A,48,47)		CKSSYB104K10
C 1514	(B,45,20)		CKSSYB104K10
C 1515	(A,44,19)		CKSSYB104K10
C 1516	(A,44,47)		CKSSYB104K10
C 1517	(A,42,47)		CKSSYB104K10
C 1518	(A,38,47)		CKSSYB104K10
C 1519	(A,34,47)		CKSSYB104K10
C 1520	(A,27,47)		CKSSYB104K10
C 1521	(A,25,33)		CKSSYB104K10
C 1522	(A,25,38)		CKSSYB104K10
C 1523	(A,20,45)		CKSSYB104K10
C 1524	(A,21,48)		CKSSYB473K16
C 1526	(A,25,37)		CKSSYB103K16
C 1528	(B,30,48)		CCSSCH471J50
C 1601	(A,32,19)		CKSSYB103K16
C 1602	(A,34,17)		CCSSCH101J50
C 1603	(A,34,18)		CCSSCH101J50
C 1604	(A,30,17)		CCSSCH680J50
C 1605	(A,30,18)		CCSSCH680J50
C 1606	(A,35,19)		CKSSYB104K10
C 1607	(A,20,24)	10 uF	CCG1192
C 1608	(A,28,18)	4.7 uF	CCG1201
C 1609	(A,26,22)		CKSSYB104K10
C 1612	(A,24,24)		CKSSYB104K10
C 1613	(A,25,25)		CKSSYB104K10
C 1614	(A,23,24)		CKSSYB104K10
C 1615	(A,23,26)		CKSSYB104K10
C 1616	(A,25,27)		CKSSYB104K10
C 1617	(B,27,28)		CKSSYB104K10
C 1618	(A,23,29)		CCSSCH101J50
C 1619	(A,23,30)		CKSSYB562K25
C 1620	(B,27,30)		CKSSYB224K6R3
C 1621	(A,23,31)		CKSSYB224K6R3
C 1622	(A,25,31)		CKSSYB333K16
C 1623	(A,27,20)		CKSRYB105K10
C 1624	(A,25,32)		CKSSYB104K10
C 1625	(A,25,29)		CKSSYB104K10
C 1671	(A,42,19)		CKSSYB104K10

Circuit Symbol and No.			Part No.
C 1673	(A,37,17)		CKSSYB104K10
C 1674	(B,42,20)		CKSSYB104K10
C 1676	(B,38,20)		CKSRYB105K10
C 1801	(B,51,10)	4.7 uF	CCG1201
C 1802	(B,53,10)	4.7 uF	CCG1201
C 1803	(B,50,12)		CCSRCH182J50
C 1804	(B,53,12)		CCSRCH182J50
C 1805	(B,47,14)		CKSSYB104K10
C 1806	(B,56,8)	10 uF	CCG1192
C 1809	(B,40,17)		CKSSYB102K50
C 1953	(B,60,17)		CKSRYB105K10
C 1954	(B,55,17)		CKSRYB105K10
C 1955	(B,77,40)		CKSSYB104K16
C 1962	(B,40,20)		CKSRYB105K10

D

Unit Number : CWN9904
Unit Name : SOC Single Core Unit

MISCELLANEOUS

IC 4001	(A,43,43)	IC	MCIMX6S6AVM08AC
IC 4301	(A,54,72)	RAM IC	H5TQ4G63CFR-RDC
IC 4302	(A,35,72)	RAM IC	H5TQ4G63CFR-RDC
IC 4401	(A,10,60)	IC	CWJ2605
IC 4402	(B,21,65)	IC	PE1038A
IC 4403	(B,24,56)	IC	TC7WU04FU
IC 4501	(B,11,39)	IC	AK8814VQ
IC 4701	(B,69,62)	IC	LTC3612EUDC
IC 4721	(B,68,35)	IC	LTC3612EUDC
IC 4741	(B,68,50)	IC	LTC3612EUDC
IC 4766	(A,30,17)	Regulator IC	MM3479A30P
IC 4791	(A,47,23)	IC	TC7SH08FUS1
IC 4792	(A,47,18)	IC	PST8429N
IC 4793	(A,45,15)	IC	TC7SH08FUS1
IC 4794	(A,42,20)	IC	TC7SH08FUS1
IC 4796	(A,23,59)	Regulator IC	MM3479A12P
IC 4901	(A,68,26)	IC	337S3959
IC 4903	(A,29,25)	IC	TC7WBL3306CFK
Q 4776	(A,63,23)	Chip Transistor	2SB1689
Q 4777	(A,62,29)	Resistor Built-IN TR	LTC044EEB
Q 4778	(A,27,23)	Resistor Built-IN TR	LTC044EEB
L 4501	(B,6,49)	Inductor	LCYA2R7J2016
L 4502	(B,8,30)	Inductor	LCYA2R7J2016
L 4701	(A,70,59)	SMD SPL Inductor	CTH1500
L 4721	(A,64,34)	SMD SPL Inductor	CTH1499
L 4741	(A,69,47)	SMD SPL Inductor	CTH1499
L 4901	(B,57,42)	Ferrite Bead	CTF1528
L 4909	(A,56,38)	Inductor	CTF1787
L 5001	(A,71,22)	Inductor	CTF1868
L 5002	(A,67,19)	Inductor	CTF1870
TH4381	(A,25,72)	Thermistor	CCX1084
X 4001	(A,49,28)	Resonator 24 MHz	CSS1773
X 4002	(A,44,28)	Resonator 32.768 kHz	CSS1807
X 4401	(B,30,55)	Crystal Resonator 14.745 6 MHz	CSS1835
X 4901	(B,60,43)	VCXO 11.289 6MHz	CWX4566
CN5001	(B,57,20)	B TO B Connector	CKS6499
CN5002	(B,20,20)	B TO B Connector	CKS6556

RESISTORS

Circuit Symbol and No.		Part No.
R 4001	(A,27,54)	RAB4CQ470J
R 4002	(A,27,51)	RAB4CQ470J
R 4003	(A,27,48)	RAB4CQ470J
R 4004	(A,27,46)	RAB4CQ470J
R 4005	(A,27,43)	RAB4CQ470J
R 4006	(A,27,41)	RS1/16SS470J
R 4007	(A,50,31)	RS1/16SS470J
R 4008	(A,4,23)	RS1/16SS0R0J
R 4009	(A,34,59)	RS1/16SS0R0J
R 4011	(A,24,46)	RS1/16SS103J
R 4012	(A,25,52)	RS1/16SS103J
R 4015	(A,45,31)	RS1/16SS102J
R 4017	(A,24,55)	RS1/16SS103J
R 4018	(B,50,41)	RS1/16SS0R0J
R 4022	(B,18,43)	RS1/16SS330J
R 4029	(B,64,11)	RS1/16SS472J
R 4054	(A,24,52)	RS1/16SS103J
R 4055	(A,24,41)	RS1/16SS103J
R 4056	(A,25,41)	RS1/16SS103J
R 4057	(A,23,44)	RS1/16SS103J
R 4058	(A,24,44)	RS1/16SS103J
R 4059	(A,24,44)	RS1/16SS103J
R 4060	(A,25,44)	RS1/16SS103J
R 4063	(A,23,49)	RS1/16SS103J
R 4064	(A,24,49)	RS1/16SS103J
R 4066	(A,25,49)	RS1/16SS103J
R 4067	(A,23,52)	RS1/16SS103J
R 4068	(A,24,52)	RS1/16SS103J
R 4070	(A,23,55)	RS1/16SS103J
R 4073	(A,24,46)	RS1/16SS103J
R 4074	(A,25,46)	RS1/16SS103J
R 4081	(A,4,35)	RS1/10SR0R0J
R 4084	(A,4,29)	RS1/16SS102J
R 4091	(A,47,28)	RS1/16SS225J
R 4095	(A,43,24)	RS1/16SS0R0J
R 4100	(B,20,42)	RS1/16SS470J
R 4101	(B,53,41)	RS1/16SS0R0J
R 4103	(B,13,68)	RS1/16SS220J
R 4105	(A,25,55)	RS1/16SS103J
R 4111	(B,15,65)	RS1/16SS472J
R 4141	(B,57,83)	RS1/16SS103J
R 4151	(A,28,28)	RS1/16SS0R0J
R 4154	(B,66,27)	RS1/16SS0R0J
R 4155	(B,67,27)	RS1/16SS0R0J
R 4157	(A,30,28)	RS1/16SS0R0J
R 4158	(B,30,38)	RAB4CQ471J
R 4159	(B,30,41)	RAB4CQ471J
R 4160	(B,31,43)	RAB4CQ471J
R 4162	(B,31,46)	RAB4CQ471J
R 4163	(A,30,40)	RS1/16SS470J
R 4164	(B,20,43)	RS1/16SS470J
R 4165	(A,29,40)	RS1/16SS470J
R 4171	(A,22,39)	RS1/16SS0R0J
R 4186	(A,26,39)	RS1/16SS101J
R 4209	(A,24,55)	RS1/16SS103J
R 4213	(A,24,49)	RS1/16SS103J
R 4216	(A,23,46)	RS1/16SS103J
R 4220	(A,21,41)	RS1/16SS103J
R 4222	(A,23,41)	RS1/16SS103J
R 4224	(A,21,39)	RS1/16SS103J

Circuit Symbol and No.		Part No.
R 4226	(A,24,41)	RS1/16SS103J
R 4228	(A,22,41)	RS1/16SS103J
R 4230	(A,20,39)	RS1/16SS222J
R 4232	(A,20,39)	RS1/16SS222J
R 4236	(B,24,39)	RS1/16SS103J
R 4237	(B,22,44)	RS1/16SS103J
R 4238	(A,56,40)	RS1/16SS0R0J
R 4242	(A,4,25)	RS1/16SS101J
R 4244	(A,20,41)	RS1/16SS103J
R 4260	(B,51,13)	RS1/16SS103J
R 4261	(B,53,13)	RS1/16SS103J
R 4262	(B,62,9)	RS1/16SS103J
R 4263	(B,24,30)	RS1/16SS103J
R 4264	(B,12,27)	RS1/16SS103J
R 4265	(A,13,19)	RS1/16SS103J
R 4266	(A,14,19)	RS1/16SS103J
R 4268	(B,23,30)	RS1/16SS103J
R 4270	(B,50,32)	RS1/16SS103J
R 4271	(B,50,31)	RS1/16SS103J
R 4272	(A,27,40)	RS1/16SS470J
R 4273	(A,38,56)	RS1/16SS2400F
R 4274	(B,56,55)	RS1/16SS1001D
R 4275	(B,54,55)	RS1/16SS1001D
R 4276	(B,33,10)	RS1/16SS103J
R 4277	(B,54,47)	RS1/16SS103J
R 4278	(B,63,29)	RS1/16SS103J
R 4279	(B,24,11)	RS1/16SS103J
R 4280	(B,30,30)	RS1/16SS103J
R 4281	(B,32,11)	RS1/16SS103J
R 4282	(B,26,10)	RS1/16SS103J
R 4283	(B,29,30)	RS1/16SS103J
R 4284	(B,46,11)	RS1/16SS103J
R 4285	(B,60,13)	RS1/16SS103J
R 4286	(A,43,56)	RS1/16SS0R0J
R 4287	(A,42,56)	RS1/16SS0R0J
R 4288	(B,65,27)	RS1/16SS103J
R 4289	(B,41,7)	RS1/16SS103J
R 4290	(B,51,43)	RS1/16SS0R0J
R 4291	(A,41,56)	RS1/16SS0R0J
R 4292	(A,40,56)	RS1/16SS0R0J
R 4293	(B,44,10)	RS1/16SS104J
R 4295	(B,26,13)	RS1/16SS103J
R 4296	(B,64,9)	RS1/16SS222J
R 4297	(B,63,9)	RS1/16SS103J
R 4300	(B,24,13)	RS1/16SS103J
R 4302	(B,46,10)	RS1/16SS104J
R 4303	(A,21,52)	RS1/16SS101J
R 4307	(B,54,73)	RS1/16SS1200D
R 4308	(B,35,73)	RS1/16SS1200D
R 4309	(B,51,73)	RS1/16SS2400F
R 4310	(B,32,73)	RS1/16SS2400F
R 4314	(B,57,82)	RS1/16SS102J
R 4315	(B,39,82)	RS1/16SS102J
R 4317	(B,19,4)	RS1/16SS0R0J
R 4381	(A,25,73)	RS1/16SS1802D
R 4401	(A,7,47)	RS1/16SS102J
R 4402	(A,11,72)	RS1/16SS0R0J
R 4403	(A,10,48)	RS1/16SS0R0J
R 4404	(B,28,57)	RS1/16SS102J
R 4405	(B,28,55)	RS1/16SS105J

Circuit Symbol and No.		Part No.	Circuit Symbol and No.		Part No.
R 4407	(B,15,63)	RS1/16SS471J	R 4540	(B,6,68)	RS1/16SS220J
R 4411	(B,20,57)	RS1/16SS220J	R 4543	(A,14,33)	RS1/16SS101J
R 4412	(B,24,58)	RS1/16SS102J	R 4544	(A,13,33)	RS1/16SS101J
R 4413	(A,15,72)	RS1/16SS0R0J	R 4545	(A,12,33)	RS1/16SS101J
R 4415	(A,26,62)	RS1/16SS0R0J	R 4546	(A,11,33)	RS1/16SS101J
R 4416	(A,17,57)	RS1/16SS0R0J	R 4547	(A,8,37)	RS1/16SS101J
R 4417	(A,16,73)	RS1/16SS472J	R 4548	(A,8,36)	RS1/16SS101J
R 4418	(A,16,74)	RS1/16SS472J	R 4549	(A,8,36)	RS1/16SS101J
R 4419	(A,16,75)	RS1/16SS472J	R 4550	(A,8,35)	RS1/16SS101J
R 4420	(A,20,67)	RS1/16SS101J	R 4702	(A,74,64)	RS1/8SQ0R0J
R 4421	(A,21,63)	RS1/16SS101J	R 4704	(A,65,60)	RS1/8SQ0R0J
R 4445	(B,18,46)	RAB4CQ101J	R 4705	(B,69,59)	RS1/16SS220J
R 4446	(B,18,49)	RAB4CQ101J	R 4706	(B,65,59)	RS1/16SS105J
R 4447	(B,13,70)	RS1/16SS103J	R 4707	(B,64,59)	RS1/16SS105J
R 4448	(A,24,69)	RS1/16SS0R0J	R 4708	(B,64,61)	RS1/16SS2201D
R 4449	(B,6,69)	RS1/16SS0R0J	R 4709	(B,67,65)	RS1/16SS0R0J
R 4450	(B,5,66)	RS1/16SS330J	R 4710	(B,64,63)	RS1/16SS1003D
R 4451	(B,15,64)	RS1/16SS0R0J	R 4711	(B,65,63)	RS1/16SS183J
R 4452	(B,13,64)	RS1/16SS561J	R 4713	(B,67,66)	RS1/16SS1002D
R 4453	(B,5,63)	RS1/16SS561J	R 4714	(B,65,66)	RS1/16SS1503D
R 4454	(B,5,65)	RS1/16SS561J	R 4715	(B,65,62)	RS1/16SS1503D
R 4455	(B,13,57)	RS1/16SS220J	R 4716	(A,64,62)	RS1/16SS0R0J
R 4456	(B,5,55)	RS1/16SS220J	R 4717	(B,67,59)	RS1/16SS0R0J
R 4457	(B,11,51)	RS1/16SS220J	R 4721	(A,66,39)	RS1/8SQ0R0J
R 4458	(B,12,51)	RS1/16SS220J	R 4722	(A,70,30)	RS1/8SQ0R0J
R 4459	(B,14,55)	RS1/16SS220J	R 4723	(A,64,39)	RS1/8SQ0R0J
R 4460	(B,14,54)	RS1/16SS220J	R 4724	(B,64,35)	RS1/16SS220J
R 4461	(B,14,52)	RS1/16SS220J	R 4725	(B,65,39)	RS1/16SS105J
R 4462	(B,13,52)	RS1/16SS220J	R 4726	(B,65,41)	RS1/16SS105J
R 4463	(B,27,49)	RS1/16SS0R0J	R 4727	(B,66,40)	RS1/16SS2702D
R 4464	(B,27,48)	RS1/16SS0R0J	R 4728	(B,71,37)	RS1/16SS105J
R 4465	(B,27,48)	RS1/16SS0R0J	R 4729	(B,70,41)	RS1/16SS1503D
R 4466	(B,27,47)	RS1/16SS0R0J	R 4730	(B,72,37)	RS1/16SS1002D
R 4467	(B,26,46)	RS1/16SS0R0J	R 4731	(B,72,39)	RS1/16SS1503D
R 4468	(B,26,45)	RS1/16SS0R0J	R 4732	(B,67,39)	RS1/16SS1203D
R 4469	(B,26,44)	RS1/16SS0R0J	R 4733	(A,68,40)	RS1/16SS0R0J
R 4470	(B,26,43)	RS1/16SS0R0J	R 4734	(B,69,39)	RS1/16SS223J
R 4473	(B,24,70)	RS1/16SS0R0J	R 4735	(A,71,40)	RS1/10SR102J
R 4474	(B,22,70)	RS1/16SS0R0J	R 4736	(B,64,37)	RS1/16SS0R0J
R 4475	(B,28,62)	RS1/16SS0R0J	R 4737	(B,68,40)	RS1/16SS4703D
R 4476	(B,28,61)	RS1/16SS0R0J	R 4738	(B,62,27)	RS1/16SS103J
R 4477	(B,20,70)	RS1/16SS0R0J	R 4739	(B,70,44)	RS1/16SS0R0J
R 4479	(B,17,70)	RS1/16SS181J	R 4741	(A,63,49)	RS1/8SQ0R0J
R 4480	(B,21,72)	RS1/16SS0R0J	R 4742	(A,72,52)	RS1/8SQ0R0J
R 4481	(B,16,62)	RS1/16SS0R0J	R 4743	(A,63,47)	RS1/8SQ0R0J
R 4482	(B,16,64)	RS1/16SS472J	R 4744	(B,68,46)	RS1/16SS220J
R 4502	(B,16,42)	RS1/16SS103J	R 4745	(B,63,47)	RS1/16SS105J
R 4503	(B,22,34)	RS1/16SS101J	R 4746	(B,62,47)	RS1/16SS105J
R 4504	(B,21,34)	RS1/16SS101J	R 4747	(B,62,48)	RS1/16SS2702D
R 4505	(B,17,41)	RS1/16SS103J	R 4749	(B,61,52)	RS1/16SS1503D
R 4507	(B,17,39)	RS1/16SS221J	R 4750	(B,66,54)	RS1/16SS1002D
R 4508	(B,17,37)	RS1/16SS221J	R 4751	(B,64,54)	RS1/16SS1503D
R 4510	(B,11,32)	RS1/16SS6801D	R 4752	(B,64,49)	RS1/16SS1203D
R 4511	(B,20,40)	RS1/16SS101J	R 4753	(A,63,51)	RS1/16SS0R0J
R 4512	(B,5,42)	RS1/16SS103J	R 4754	(B,64,51)	RS1/16SS223J
R 4513	(B,16,34)	RS1/10SR0R0J	R 4755	(A,62,53)	RS1/10SR102J
R 4514	(B,16,30)	RS1/10SR0R0J	R 4756	(B,65,47)	RS1/16SS0R0J
R 4515	(B,16,33)	RS1/10SR0R0J	R 4757	(B,62,50)	RS1/16SS4703D
R 4525	(B,5,67)	RS1/16SS0R0J	R 4758	(B,71,39)	RS1/16SS0R0J
R 4529	(B,5,46)	RS1/16SS0R0J	R 4759	(B,60,52)	RS1/16SS0R0J

Circuit Symbol and No.		Part No.
R 4767	(A,37,17)	RS1/10SR0R0J
R 4768	(B,36,10)	RS1/10SR0R0J
R 4769	(A,25,16)	RS1/16SS0R0J
R 4772	(A,40,12)	RS1/16SS103J
R 4773	(A,32,6)	RS1/10SR0R0J
R 4775	(A,39,13)	RS1/16SS0R0J
R 4776	(A,63,27)	RS1/10SR332J
R 4777	(A,63,26)	RS1/10SR332J
R 4778	(A,26,18)	RS1/16SS103J
R 4779	(A,27,27)	RS1/16SS103J
R 4780	(A,27,26)	RS1/16SS101J
R 4790	(A,50,23)	RS1/16SS101J
R 4791	(A,46,25)	RS1/16SS101J
R 4792	(A,49,17)	RS1/16SS0R0J
R 4793	(A,41,16)	RS1/16SS0R0J
R 4794	(A,49,15)	RS1/16SS103J
R 4795	(A,46,21)	RS1/16SS683J
R 4798	(A,42,17)	RS1/16SS104J
R 4799	(A,44,21)	RS1/16SS0R0J
R 4800	(A,44,20)	RS1/16SS0R0J
R 4801	(A,43,13)	RS1/16SS0R0J
R 4802	(A,43,23)	RS1/16SS0R0J
R 4803	(A,51,25)	RS1/16SS101J
R 4804	(A,50,24)	RS1/16SS103J
R 4805	(A,44,25)	RS1/16SS103J
R 4845	(A,65,59)	RS1/8SQ0R0J
R 4901	(A,39,31)	RS1/16SS103J
R 4902	(A,71,26)	RS1/16SS222J
R 4903	(A,37,31)	RS1/16SS470J
R 4904	(A,65,28)	RS1/16SS222J
R 4905	(A,65,27)	RS1/16SS221J
R 4906	(A,65,26)	RS1/16SS103J
R 4907	(A,65,24)	RS1/16SS0R0J
R 4911	(A,56,37)	RS1/16SS151J
R 4912	(B,62,41)	RS1/16SS0R0J
R 4913	(B,60,41)	RS1/16SS0R0J
R 4914	(A,36,31)	RS1/16SS470J
R 4915	(A,40,24)	RS1/16SS0R0J
R 4916	(B,35,6)	RS1/16SS0R0J
R 4918	(A,32,25)	RS1/16SS0R0J
R 4934	(B,32,49)	RS1/16SS0R0J
R 4937	(A,24,12)	RS1/16SS103J
R 4938	(A,23,12)	RS1/16SS103J
R 4939	(A,22,12)	RS1/16SS103J
R 4941	(B,54,40)	RS1/16SS431J
R 4942	(B,53,44)	RS1/16SS102J
R 4945	(B,24,37)	RS1/16SS103J
R 4946	(A,27,12)	RS1/16SS102J
R 4949	(A,22,31)	RS1/16SS683J
R 4954	(A,27,21)	RS1/16SS0R0J
R 4955	(A,29,22)	RS1/16SS0R0J
R 5003	(B,63,27)	RS1/16SS0R0J
R 5004	(B,64,27)	RS1/16SS0R0J
R 5006	(B,22,13)	RS1/16SS0R0J
R 5007	(B,14,13)	RS1/16SS471J
R 5008	(B,27,13)	RS1/16SS151J
R 5009	(B,12,13)	RS1/16SS471J
R 5012	(B,42,13)	RS1/16SS0R0J
R 5013	(B,43,13)	RS1/16SS0R0J
R 5014	(B,44,13)	RS1/16SS0R0J

Circuit Symbol and No.		Part No.
R 5015	(B,44,13)	RS1/16SS0R0J
R 5016	(B,45,13)	RS1/16SS0R0J
R 5017	(A,41,31)	RS1/16SS0R0J
R 5020	(B,23,13)	RS1/16SS560J
R 5021	(B,23,28)	RS1/16SS0R0J
R 5022	(B,24,28)	RS1/16SS0R0J
R 5023	(B,24,28)	RS1/16SS101J
R 5024	(B,24,30)	RS1/16SS121J
R 5025	(B,26,28)	RS1/16SS121J
R 5026	(B,63,13)	RS1/16SS121J
R 5027	(B,62,13)	RS1/16SS680J
R 5028	(B,64,13)	RS1/16SS121J
R 5029	(A,16,46)	RS1/16SS102J
R 5030	(A,17,52)	RS1/16SS102J
R 5031	(A,16,46)	RS1/16SS102J
R 5032	(B,15,13)	RS1/16SS560J
R 5033	(B,17,13)	RS1/16SS221J
R 5034	(B,59,13)	RS1/16SS681J
R 5036	(B,48,13)	RS1/16SS101J
R 5037	(B,13,27)	RS1/16SS101J
R 5040	(A,10,21)	RS1/16SS0R0J
R 5041	(A,11,21)	RS1/16SS681J
R 5042	(A,9,21)	RS1/16SS471J
R 5043	(A,8,21)	RS1/16SS0R0J
R 5044	(A,7,21)	RS1/16SS471J
R 5045	(A,65,20)	RS1/16SS0R0J
R 5046	(B,55,13)	RS1/16SS0R0J
R 5047	(B,57,13)	RS1/16SS680J
R 5048	(B,52,46)	RS1/16SS331J
R 5049	(B,54,46)	RS1/16SS331J
R 5053	(B,8,27)	RS1/16SS560J
R 5054	(B,7,27)	RS1/16SS560J
R 5055	(B,11,27)	RS1/16SS560J
R 5056	(B,10,27)	RS1/16SS560J
R 5057	(B,9,27)	RS1/16SS560J
R 5059	(B,31,13)	RS1/16SS560J
R 5060	(B,32,13)	RS1/16SS560J
R 5061	(B,28,13)	RS1/16SS560J
R 5062	(B,29,13)	RS1/16SS560J
R 5063	(B,25,11)	RS1/16SS0R0J
R 5064	(B,32,13)	RS1/16SS0R0J
R 5065	(B,30,13)	RS1/16SS560J
R 5090	(B,57,27)	RS1/16SS0R0J
R 5099	(B,17,28)	RS1/16SS0R0J
R 5100	(B,53,47)	RS1/16SS331J
R 5101	(A,55,43)	RS1/16SS680J
R 5102	(A,18,50)	RS1/16SS680J
R 5103	(B,21,28)	RS1/16SS560J
R 5104	(A,20,48)	RS1/16SS680J
R 5105	(A,20,49)	RS1/16SS680J
R 5106	(A,19,50)	RS1/16SS680J
R 5107	(B,19,10)	RS1/16SS101J
R 5114	(B,27,28)	RS1/16SS101J
R 5115	(B,27,30)	RS1/16SS101J
R 5116	(B,30,28)	RS1/16SS0R0J
R 5117	(B,30,28)	RS1/16SS0R0J
R 5119	(B,24,13)	RS1/16SS101J
R 5121	(B,34,28)	RS1/10SR0R0J
R 5122	(B,34,29)	RS1/10SR0R0J
R 5125	(A,65,22)	RS1/16SS222J

Circuit Symbol and No.			Part No.
R 5126	(A,65,21)		RS1/16SS222J
R 5127	(B,62,11)		RS1/16SS182J
R 5128	(B,63,11)		RS1/16SS182J
R 5129	(B,21,11)		RS1/16SS101J
R 5130	(B,36,31)		RS1/16SS103J
R 5131	(B,37,28)		RS1/16SS103J
R 5132	(A,10,19)		RS1/16SS0R0J
R 5315	(A,16,82)		RS1/16SS0R0J
R 5316	(A,16,83)		RS1/16SS0R0J
R 5317	(A,16,84)		RS1/16SS0R0J
R 5318	(A,16,85)		RS1/16SS0R0J
R 5326	(A,64,84)		RS1/16SS0R0J
R 5327	(A,64,84)		RS1/16SS0R0J
R 5328	(A,64,83)		RS1/16SS0R0J
R 5329	(A,64,82)		RS1/16SS0R0J
R 5351	(A,4,15)		RS1/16SS0R0J
R 5352	(A,5,15)		RS1/16SS0R0J
R 5353	(A,6,15)		RS1/16SS0R0J
R 5354	(A,7,15)		RS1/16SS0R0J
R 5355	(A,8,15)		RS1/16SS0R0J
R 5356	(A,9,15)		RS1/16SS0R0J
R 5357	(A,10,15)		RS1/16SS0R0J
R 5358	(A,11,15)		RS1/16SS0R0J
R 5359	(A,11,15)		RS1/16SS0R0J
R 5360	(A,12,15)		RS1/16SS0R0J
R 5361	(A,13,15)		RS1/16SS0R0J
R 5362	(A,14,15)		RS1/16SS0R0J
R 5376	(A,59,15)		RS1/16SS0R0J
R 5377	(A,58,15)		RS1/16SS0R0J
R 5378	(A,57,15)		RS1/16SS0R0J
R 5379	(A,56,15)		RS1/16SS0R0J

CAPACITORS

Circuit Symbol and No.			Part No.
C 4001	(A,51,28)		CCSSCJ3R0C50
C 4002	(A,47,30)		CCSSCH4R0C50
C 4003	(A,43,30)		CCSSCH180J50
C 4004	(A,43,28)		CCSSCH8R0D50
C 4005	(B,52,36)	10 uF	CCG1192
C 4006	(B,50,37)		CKSSYB104K10
C 4007	(B,52,38)	2.2 uF	CCG1218
C 4008	(B,50,38)		CKSSYB104K10
C 4009	(B,40,36)		CKSSYB104K10
C 4010	(B,34,31)	10 uF	CCG1192
C 4011	(B,38,36)		CKSSYB104K10
C 4012	(B,37,36)		CKSSYB104K10
C 4013	(B,44,33)	10 uF	CCG1192
C 4014	(B,45,34)		CKSSYB104K10
C 4015	(B,45,38)		CKSSYB104K10
C 4016	(B,46,40)		CKSSYB104K10
C 4017	(B,46,43)		CKSSYB104K10
C 4018	(B,46,44)		CKSSYB104K10
C 4019	(B,44,39)		CKSSYB104K10
C 4020	(B,42,41)		CKSSYB104K10
C 4021	(B,42,42)		CKSSYB104K10
C 4022	(B,42,43)		CKSSYB104K10
C 4023	(B,38,38)		CKSSYB104K10
C 4024	(B,37,41)		CKSSYB104K10
C 4025	(B,38,44)		CKSSYB104K10
C 4026	(B,49,38)		CKSSYB104K10
C 4027	(B,49,40)		CKSSYB104K10
C 4029	(B,40,41)		CKSSYB104K10
C 4030	(B,47,42)	1 uF	DCH1246
C 4031	(B,40,45)		CKSSYB104K10
C 4034	(B,48,43)		CKSSYB104K10
C 4037	(B,40,38)		CKSSYB104K10
C 4038	(B,39,43)	1 uF	DCH1246
C 4039	(B,36,46)		CKSSYB104K10
C 4040	(B,44,46)		CKSSYB104K10
C 4041	(B,36,44)		CKSSYB104K10
C 4042	(B,48,46)		CKSSYB104K10
C 4043	(B,46,46)		CKSSYB104K10
C 4044	(B,40,46)		CKSSYB104K10
C 4045	(B,39,47)		CKSSYB104K10
C 4047	(B,49,48)		CKSSYB104K10
C 4048	(B,44,48)		CKSSYB104K10
C 4050	(B,41,48)		CKSSYB104K10
C 4051	(B,44,42)	22 uF	DCH1256
C 4052	(B,43,46)	22 uF	CCG1254
C 4053	(B,36,36)	22 uF	CCG1254
C 4054	(B,52,33)	10 uF	CCG1192
C 4055	(B,50,35)		CKSSYB104K10
C 4056	(A,36,14)	10 uF	CCG1192
C 4057	(B,35,49)	10 uF	CCG1192
C 4058	(B,38,46)		CKSSYB104K10
C 4059	(B,47,48)		CKSSYB104K10
C 4062	(B,56,54)		CKSSYB104K10
C 4063	(B,54,54)		CKSSYB104K10
C 4064	(B,44,36)	10 uF	CCG1192
C 4065	(B,37,39)		CKSSYB104K10
C 4066	(B,48,40)		CKSSYB104K10
C 4067	(B,48,38)		CKSSYB104K10
C 4068	(B,40,39)		CKSSYB104K10
C 4069	(B,41,42)	1 uF	DCH1246
C 4070	(B,45,37)		CKSSYB104K10
C 4071	(B,46,34)		CKSSYB104K10
C 4072	(B,39,32)	10 uF	CCG1192
C 4073	(B,44,31)	10 uF	CCG1192
C 4075	(B,41,36)		CKSSYB104K10
C 4076	(B,35,41)	10 uF	CCG1192
C 4077	(B,53,49)	10 uF	CCG1192
C 4078	(B,48,36)		CKSSYB104K10
C 4079	(A,43,25)		CCSSCH101J50
C 4080	(B,52,51)		CKSSYB104K10
C 4087	(B,43,38)	22 uF	DCH1256
C 4301	(B,59,66)		CKSSYB104K10
C 4302	(A,59,66)		CKSSYB104K10
C 4303	(B,51,63)		CKSSYB104K10
C 4304	(B,51,65)		CKSSYB104K10
C 4305	(B,50,67)		CKSSYB104K10
C 4306	(A,49,67)		CKSSYB104K10
C 4307	(A,49,69)		CKSSYB104K10
C 4308	(A,49,71)		CKSSYB104K10
C 4309	(B,52,67)	4.7 uF	CCG1201
C 4310	(B,52,70)		CKSSYB104K10
C 4311	(A,59,68)		CKSSYB104K10
C 4312	(B,58,70)		CKSSYB104K10
C 4313	(B,56,71)		CKSSYB104K10
C 4314	(A,59,75)		CKSSYB104K10

Circuit Symbol and No.			Part No.
C 4315	(A,59,77)		CKSSYB104K10
C 4316	(B,59,77)		CKSSYB104K10
C 4317	(B,58,77)	4.7 uF	CCG1201
C 4318	(A,49,75)		CKSSYB104K10
C 4319	(B,50,75)		CKSSYB104K10
C 4320	(A,49,78)		CKSSYB104K10
C 4321	(B,59,68)		CKSSYB104K10
C 4322	(B,59,70)		CKSSYB104K10
C 4323	(B,56,73)		CKSSYB104K10
C 4324	(B,59,75)		CKSSYB104K10
C 4325	(A,41,66)		CKSSYB104K10
C 4326	(B,40,66)		CKSSYB104K10
C 4327	(B,33,63)		CKSSYB104K10
C 4328	(B,33,64)		CKSSYB104K10
C 4329	(A,30,67)		CKSSYB104K10
C 4330	(B,30,67)		CKSSYB104K10
C 4331	(A,30,69)		CKSSYB104K10
C 4332	(A,30,71)		CKSSYB104K10
C 4333	(B,28,69)	4.7 uF	CCG1201
C 4334	(B,33,71)		CKSSYB104K10
C 4335	(A,41,68)		CKSSYB104K10
C 4336	(A,41,70)		CKSSYB104K10
C 4337	(B,38,71)		CKSSYB104K10
C 4338	(B,50,69)		CKSSYB104K10
C 4339	(B,50,71)		CKSSYB104K10
C 4340	(A,43,71)		CKSSYB104K10
C 4341	(B,52,75)		CKSSYB104K10
C 4342	(B,50,78)		CKSSYB104K10
C 4343	(B,40,68)		CKSSYB104K10
C 4344	(B,39,70)		CKSSYB104K10
C 4345	(B,33,75)		CKSSYB104K10
C 4346	(B,30,75)		CKSSYB104K10
C 4347	(A,30,75)		CKSSYB104K10
C 4348	(A,30,77)		CKSSYB104K10
C 4349	(A,41,75)		CKSSYB104K10
C 4350	(A,41,77)		CKSSYB104K10
C 4351	(B,40,77)		CKSSYB104K10
C 4352	(B,38,76)	4.7 uF	CCG1201
C 4353	(A,61,71)		CKSSYB104K10
C 4354	(B,40,75)		CKSSYB104K10
C 4355	(B,30,69)		CKSSYB104K10
C 4356	(B,51,75)		CKSSYB104K10
C 4357	(B,39,81)		CKSSYB103K16
C 4358	(B,57,81)		CKSSYB103K16
C 4361	(B,30,71)		CKSSYB104K10
C 4362	(B,33,72)		CKSSYB104K10
C 4363	(B,30,77)		CKSSYB104K10
C 4364	(B,38,73)		CKSSYB104K10
C 4381	(A,26,73)		CKSSYB104K10
C 4382	(A,25,71)		CKSSYB104K10
C 4401	(A,9,48)		CKSSYB471K50
C 4402	(A,5,71)		CKSSYB104K10
C 4403	(A,9,71)		CKSSYB103K16
C 4404	(B,30,52)		CCSSCH8R0D50
C 4405	(B,29,57)		CCSSCH8R0D50
C 4406	(B,22,58)		CKSSYB103K16
C 4412	(A,22,65)		CKSSYB103K16
C 4413	(A,19,68)		CKSSYB103K16
C 4414	(A,19,65)		CKSSYB103K16
C 4415	(A,20,64)		CKSSYB103K16

Circuit Symbol and No.			Part No.
C 4416	(A,20,67)		CKSSYB103K16
C 4417	(A,19,63)		CKSSYB103K16
C 4418	(A,17,63)		CKSSYB103K16
C 4419	(A,17,64)		CKSSYB103K16
C 4420	(A,17,65)		CKSSYB103K16
C 4421	(A,17,66)		CKSSYB103K16
C 4422	(A,19,67)		CKSSYB103K16
C 4423	(A,26,65)		CKSSYB103K16
C 4424	(B,26,65)		CKSSYB103K16
C 4425	(A,25,67)		CKSSYB103K16
C 4426	(A,18,67)		CKSSYB103K16
C 4427	(A,17,60)		CKSSYB104K10
C 4428	(A,17,59)	1 uF	DCH1246
C 4429	(A,26,63)	1 uF	DCH1246
C 4430	(A,26,64)		CKSSYB104K10
C 4431	(A,17,60)		CKSSYB103K16
C 4432	(A,26,65)		CKSSYB103K16
C 4433	(B,26,58)		CKSSYB471K50
C 4435	(A,22,67)		CKSSYB104K10
C 4436	(A,23,67)	10 uF	CCG1192
C 4437	(A,22,63)		CKSSYB104K10
C 4438	(A,24,63)	10 uF	CCG1192
C 4439	(B,26,59)		CKSSYB103K16
C 4501	(B,11,45)		CKSSYB104K10
C 4502	(B,5,40)		CKSSYB104K10
C 4503	(B,4,38)		CKSSYB104K10
C 4504	(B,11,33)		CKSSYB103K16
C 4505	(B,14,33)		CKSSYB103K16
C 4506	(B,13,31)	10 uF	CCG1192
C 4507	(B,13,32)		CKSSYB103K16
C 4508	(B,18,37)		CKSSYB103K16
C 4509	(B,8,32)	10 uF	CCG1192
C 4510	(B,15,44)		CKSSYB102K50
C 4511	(B,6,44)	10 uF	CCG1192
C 4516	(B,17,40)		CCSSCH101J50
C 4704	(B,67,58)		CKSRYB105K10
C 4706	(B,65,64)		CCSSCH470J50
C 4707	(B,64,64)		CKSSYB471K50
C 4708	(A,71,64)	47 uF	CCG1229
C 4709	(A,68,64)	100 uF	CCG1232
C 4711	(B,64,62)		CCSSCH220J50
C 4712	(B,73,63)		CKSSYB103K16
C 4722	(B,63,37)		CKSRYB105K10
C 4723	(B,71,39)		CKSSYB103K16
C 4724	(B,70,39)		CCSSCH470J50
C 4725	(B,70,40)		CKSSYB471K50
C 4726	(A,69,33)	47 uF	CCG1229
C 4727	(A,70,36)	100 uF	CCG1232
C 4729	(B,67,40)		CCSSCH220J50
C 4730	(B,68,31)		CKSSYB103K16
C 4742	(B,65,46)		CKSRYB105K10
C 4744	(B,64,52)		CCSSCH470J50
C 4745	(B,62,52)		CKSSYB471K50
C 4746	(A,70,52)	47 uF	CCG1229
C 4747	(A,67,52)	100 uF	CCG1232
C 4749	(B,62,49)		CCSSCH220J50
C 4750	(B,71,51)		CKSSYB103K16
C 4766	(A,35,17)	4.7 uF	CCG1201
C 4767	(A,33,17)	4.7 uF	CCG1201
C 4768	(A,26,16)		CKSSYB473K16

Circuit Symbol and No.			Part No.
C 4776	(A,65,23)		CKSSYB104K10
C 4778	(A,27,25)		CKSSYB473K16
C 4790	(A,47,22)		CCSSCH101J50
C 4791	(A,45,23)		CKSSYB104K10
C 4792	(A,44,18)		CKSSYB104K10
C 4793	(A,49,19)		CKSSYB222K50
C 4794	(A,42,15)		CKSSYB104K10
C 4796	(A,19,59)	4.7 uF	CCG1201
C 4797	(A,20,56)	4.7 uF	CCG1201
C 4798	(A,43,22)		CKSSYB104K10
C 4799	(A,49,25)		CCSSCH101J50
C 4800	(A,27,60)		CKSSYB473K16
C 4901	(A,40,23)	1 uF	DCH1246
C 4902	(B,58,43)		CKSSYB104K10
C 4903	(A,67,24)		CKSSYB104K10
C 4904	(A,65,25)		CKSSYB102K50
C 4914	(B,59,45)		CKSSYB103K16
C 4915	(A,31,25)		CKSSYB104K10
C 4933	(A,56,35)		CCSSCH101J50
C 5001	(A,73,21)	22 uF	DCH1256
C 5003	(A,67,16)	22 uF	DCH1256
C 5007	(B,40,11)		CKSRYB102K50

E

Unit Number : CXX8726
Unit Name : Monitor Unit(Service)

MISCELLANEOUS

IC 2701	(A,115,33)	Interface IC	AK4187VN
IC 2801	(A,34,77)	Regulator IC	MM3411A15N
IC 2802	(A,41,79)	Regulator IC	MM3411A25N
IC 2803	(A,53,71)	Interface IC	BU90R104
IC 3001	(A,28,51)	Display IC	TC90193ASBG
IC 3101	(A,133,74)	Driver IC	BD81A04EFV-M
IC 3201	(A,93,68)	DC/DC Converter IC	R1290K103A
Q 2701	(A,126,31)	Chip Transistor	HN1C01FU
Q 2702	(A,129,24)	Bipolar Transistor	LSCR523UB
Q 2711	(A,112,71)	Bipolar Transistor	LSAR523UB
Q 2715	(A,128,20)	Bipolar Transistor	LSCR523UB
Q 3001	(B,25,45)	Bipolar Transistor	LSAR523UB
Q 3002	(A,12,42)	Bipolar Transistor	LSCR523UB
Q 3201	(A,83,70)	Transistor	2SAR502UB
Q 3202	(A,98,73)	Schottky Diode	LTC024EEB
Q 3301	(A,8,48)	Bipolar Transistor	LSAR523UB
D 3101	(A,132,64)	Diode	RB060M-30
D 3201	(B,95,77)	Schottky Diode	DB3S308F0
D 3202	(B,82,67)	Schottky Diode	DB3S308F0
D 3203	(B,82,69)	Schottky Diode	DB3S308F0
D 3204	(A,87,59)	Schottky Diode	RB162M-40
D 3560	(A,69,34)	Diode	DZ2S068C
L 2801	(A,43,69)	Chip Beads	VTL1127
L 2802	(A,42,68)	Chip Beads	VTL1127
L 2803	(A,42,67)	Chip Beads	VTL1127
L 2804	(A,42,66)	Chip Beads	VTL1127
L 2805	(A,42,65)	Chip Beads	VTL1127
L 2806	(A,43,64)	Chip Beads	VTL1127
L 2807	(A,46,65)	Chip Beads	VTL1127
L 2808	(A,46,67)	Chip Beads	VTL1127
L 2809	(A,47,63)	Chip Beads	VTL1127

Circuit Symbol and No.			Part No.
L 2810	(A,48,63)	Chip Beads	VTL1127
L 2811	(A,46,60)	Chip Beads	VTL1127
L 2812	(A,48,60)	Chip Beads	VTL1127
L 2813	(A,47,59)	Chip Beads	VTL1127
L 2814	(A,48,58)	Chip Beads	VTL1127
L 2815	(A,50,59)	Chip Beads	VTL1127
L 2816	(A,51,59)	Chip Beads	VTL1127
L 2817	(A,52,60)	Chip Beads	VTL1127
L 2818	(A,53,60)	Chip Beads	VTL1127
L 2819	(A,54,61)	Chip Beads	VTL1127
L 2820	(A,55,61)	Chip Beads	VTL1127
L 2821	(A,56,62)	Chip Beads	VTL1127
L 2822	(A,60,77)	Chip Solid Inductor	XTL3010
L 2823	(B,62,68)	Chip Solid Inductor	XTL3010
L 2829	(A,51,51)	Chip Ferrite Bead	BTX1047
L 2830	(A,48,78)	Chip Beads	VTL1127
L 2831	(A,45,75)	Chip Beads	VTL1127
L 2832	(A,42,74)	Chip Beads	VTL1127
L 2833	(A,41,73)	Chip Beads	VTL1127
L 2834	(A,41,72)	Chip Beads	VTL1127
L 2835	(A,43,71)	Chip Beads	VTL1127
L 3001	(A,36,44)	Inductor	CTF1734
L 3002	(A,38,45)	Inductor	CTF1734
L 3003	(A,36,45)	Inductor	CTF1734
L 3004	(A,36,47)	Inductor	CTF1734
L 3005	(A,38,49)	Inductor	CTF1734
L 3006	(A,36,50)	Inductor	CTF1734
L 3007	(A,42,49)	Inductor	CTF1734
L 3008	(A,43,49)	Inductor	CTF1734
L 3009	(A,44,47)	Inductor	CTF1734
L 3010	(A,44,49)	Inductor	CTF1734
L 3011	(A,41,54)	Inductor	CTF1734
L 3012	(A,37,54)	Inductor	CTF1734
L 3013	(A,38,43)	Inductor	CTF1734
L 3014	(A,38,42)	Inductor	CTF1734
L 3015	(A,37,41)	Inductor	CTF1734
L 3016	(A,36,41)	Inductor	CTF1734
L 3017	(A,35,41)	Inductor	CTF1734
L 3018	(A,33,41)	Inductor	CTF1734
L 3019	(A,32,41)	Inductor	CTF1734
L 3020	(A,31,41)	Inductor	CTF1734
L 3021	(A,27,42)	Inductor	CTF1740
L 3022	(A,26,41)	Inductor	CTF1734
L 3023	(A,25,41)	Inductor	CTF1734
L 3024	(A,24,41)	Inductor	CTF1734
L 3025	(B,33,39)	Inductor	CTF1545
L 3104	(A,129,68)	Inductor	CTF1545
L 3105	(A,126,67)	SMD Inductor	CTH1558
L 3201	(A,87,66)	Choke Coil 22 uH	CTH1426
L 3301	(A,5,61)	Inductor	ATL7054
L 3302	(A,19,35)	Inductor	CTF1635
TH3301	(A,143,4)	Thermistor	CCX1084
X 3001	(A,14,48)	Resonator 27.000 MHz	CSS1768
CN2702	(A,118,73)	Connector	DKN1220
CN2703	(A,63,38)	Connector	CKS6365
CN2704	(A,90,38)	Connector	CKS6365
CN2705	(A,119,13)	Connector	CKS6625
CN2706	(A,137,14)	Connector	CKS6601
CN2710	(A,144,60)	Connector	DKN1361
CN3301	(A,31,24)	Connector	CKS6602

RESISTORS

Circuit Symbol and No.		Part No.
R 2704	(A,123,29)	RS1/16SS471J
R 2705	(A,123,25)	RS1/16SS471J
R 2706	(A,120,30)	RS1/16SS471J
R 2715	(A,114,28)	RS1/16SS0R0J
R 2716	(A,117,28)	RS1/16SS0R0J
R 2717	(A,115,29)	RS1/16SS621J
R 2718	(A,116,29)	RS1/16SS181J
R 2719	(A,113,30)	RS1/16SS201J
R 2720	(A,118,31)	RS1/16SS620J
R 2724	(A,112,36)	RS1/16SS121J
R 2733	(A,128,28)	RS1/16SS180J
R 2734	(A,129,28)	RS1/16SS180J
R 2735	(A,130,28)	RS1/16SS220J
R 2736	(A,124,33)	RS1/16SS620J
R 2737	(A,123,33)	RS1/16SS620J
R 2739	(A,126,23)	RS1/16SS150J
R 2740	(A,125,23)	RS1/16SS150J
R 2741	(A,124,23)	RS1/16SS180J
R 2759	(B,117,68)	RS1/16SS0R0J
R 2760	(A,113,68)	RS1/16SS104J
R 2761	(A,115,69)	RS1/16SS104J
R 2768	(A,115,70)	RS1/16SS473J
R 2771	(A,125,20)	RS1/16SS620J
R 2772	(A,124,21)	RS1/16SS620J
R 2785	(B,141,60)	RS1/16SS0R0J
R 2786	(B,141,59)	RS1/16SS0R0J
R 2787	(B,140,58)	RS1/16SS0R0J
R 2788	(B,140,57)	RS1/16SS0R0J
R 2791	(A,141,64)	RS1/10SR0R0J
R 2801	(A,40,69)	RS1/16SS221J
R 2802	(A,40,68)	RS1/16SS221J
R 2803	(A,40,67)	RS1/16SS221J
R 2804	(A,40,66)	RS1/16SS221J
R 2805	(A,40,65)	RS1/16SS221J
R 2806	(A,40,64)	RS1/16SS221J
R 2807	(A,45,61)	RS1/16SS221J
R 2808	(A,45,63)	RS1/16SS221J
R 2809	(A,43,61)	RS1/16SS221J
R 2810	(A,45,60)	RS1/16SS221J
R 2811	(A,43,60)	RS1/16SS221J
R 2812	(A,45,59)	RS1/16SS221J
R 2813	(A,43,59)	RS1/16SS221J
R 2814	(A,45,58)	RS1/16SS221J
R 2815	(A,47,58)	RS1/16SS221J
R 2816	(A,50,57)	RS1/16SS221J
R 2817	(A,52,58)	RS1/16SS221J
R 2818	(A,53,58)	RS1/16SS221J
R 2819	(A,54,59)	RS1/16SS221J
R 2820	(A,55,59)	RS1/16SS221J
R 2821	(A,56,60)	RS1/16SS221J
R 2822	(A,55,79)	RS1/16SS103J
R 2824	(A,63,73)	RS1/16SS1000D
R 2825	(A,62,72)	RS1/16SS1000D
R 2826	(A,62,70)	RS1/16SS1000D
R 2827	(A,62,68)	RS1/16SS1000D
R 2828	(A,60,66)	RS1/16SS1000D
R 2834	(A,46,77)	RS1/16SS221J
R 2835	(A,42,75)	RS1/16SS221J
R 2836	(A,40,74)	RS1/16SS221J
R 2837	(A,39,73)	RS1/16SS221J
R 2838	(A,39,71)	RS1/16SS221J
R 2839	(A,41,70)	RS1/16SS221J
R 2857	(A,56,80)	RS1/16SS103J
R 2858	(A,58,80)	RS1/16SS103J
R 2859	(A,58,79)	RS1/16SS103J
R 2861	(A,110,41)	RS1/10SR0R0J
R 2865	(A,64,77)	RS1/16SS221J
R 3001	(A,40,43)	RS1/16SS151J
R 3002	(A,40,44)	RS1/16SS151J
R 3003	(A,40,45)	RS1/16SS151J
R 3004	(A,41,45)	RS1/16SS151J
R 3005	(A,40,49)	RS1/16SS151J
R 3006	(A,40,50)	RS1/16SS151J
R 3007	(A,42,48)	RS1/16SS151J
R 3008	(A,43,46)	RS1/16SS151J
R 3009	(A,44,44)	RS1/16SS151J
R 3010	(A,44,46)	RS1/16SS151J
R 3011	(A,42,52)	RS1/16SS151J
R 3012	(A,39,54)	RS1/16SS151J
R 3017	(A,39,56)	RS1/16SS472J
R 3018	(A,37,59)	RS1/16SS472J
R 3019	(A,37,60)	RS1/16SS472J
R 3022	(A,39,42)	RS1/16SS151J
R 3023	(A,38,41)	RS1/16SS151J
R 3024	(A,37,39)	RS1/16SS151J
R 3025	(A,36,39)	RS1/16SS151J
R 3026	(A,35,39)	RS1/16SS151J
R 3028	(A,33,39)	RS1/16SS151J
R 3029	(A,32,39)	RS1/16SS151J
R 3031	(A,31,39)	RS1/16SS151J
R 3038	(A,27,40)	RS1/16SS680J
R 3040	(A,26,37)	RS1/16SS470J
R 3041	(A,25,39)	RS1/16SS470J
R 3042	(B,28,34)	RS1/16SS0R0J
R 3043	(A,24,39)	RS1/16SS151J
R 3044	(A,17,59)	RS1/16SS472J
R 3047	(B,29,46)	RS1/16SS912J
R 3048	(A,17,60)	RS1/16SS472J
R 3049	(B,28,45)	RS1/16SS103J
R 3050	(B,27,47)	RS1/16SS103J
R 3051	(B,28,43)	RS1/16SS391J
R 3053	(A,20,63)	RS1/16SS472J
R 3054	(A,22,63)	RS1/16SS472J
R 3055	(A,21,63)	RS1/16SS472J
R 3056	(A,11,54)	RS1/16SS472J
R 3057	(A,13,54)	RS1/16SS472J
R 3058	(B,19,52)	RS1/16SS472J
R 3059	(A,9,55)	RS1/16SS472J
R 3060	(A,19,63)	RS1/16SS472J
R 3061	(A,16,58)	RS1/16SS472J
R 3064	(A,17,49)	RS1/16SS105J
R 3065	(A,15,50)	RS1/16SS471J
R 3073	(B,21,45)	RS1/16SS0R0J
R 3074	(A,19,41)	RS1/16SS152J
R 3077	(A,12,56)	RS1/16SS470J
R 3078	(A,11,58)	RS1/16SS273J
R 3079	(A,14,57)	RS1/16SS470J

Circuit Symbol and No.		Part No.
R 3080	(A,16,63)	RS1/16SS470J
R 3081	(A,17,63)	RS1/16SS470J
R 3083	(A,18,44)	RS1/16SS122J
R 3089	(B,29,40)	RS1/10SR0R0J
R 3091	(A,15,59)	RS1/16SS472J
R 3094	(A,12,57)	RS1/16SS472J
R 3095	(A,10,59)	RS1/16SS273J
R 3100	(A,8,41)	RS1/16SS0R0J
R 3103	(A,131,80)	RS1/16SS104J
R 3104	(A,131,79)	RS1/16SS154J
R 3105	(A,135,80)	RS1/16SS273J
R 3106	(A,136,79)	RS1/16SS511J
R 3108	(B,131,71)	RS1/16SS1203D
R 3110	(B,131,73)	RS1/16SS1003D
R 3116	(B,129,70)	RS1/16SS3603D
R 3117	(B,129,72)	RS1/16SS2402D
R 3202	(A,94,65)	RS1/16SS103J
R 3203	(B,95,74)	RS1/10SR9102D
R 3204	(B,95,72)	RS1/10SR1802D
R 3205	(B,95,66)	RS1/16SS203J
R 3206	(B,97,65)	RS1/16SS104J
R 3207	(A,86,69)	RS1/16SS103J
R 3208	(A,96,70)	RS1/16SS472J
R 3209	(B,83,71)	RS1/10SR1003D
R 3210	(B,79,72)	RS1/10SR9101D
R 3211	(A,95,71)	RS1/16SS6800D
R 3212	(A,96,72)	RS1/16SS1502D
R 3213	(A,96,74)	RS1/16SS8201D
R 3214	(A,86,62)	RS1/10SR2R2J
R 3216	(A,96,63)	RS1/10SR1203D
R 3217	(A,96,66)	RS1/10SR3001D
R 3218	(A,99,66)	RS1/10SR1502D
R 3219	(A,97,63)	RS1/10SR472J
R 3220	(A,69,80)	RS1/16SS0R0J
R 3221	(A,69,79)	RS1/16SS0R0J
R 3222	(A,77,71)	RS1/16SS0R0J
R 3223	(A,79,71)	RS1/16SS0R0J
R 3224	(A,84,79)	RS1/16SS0R0J
R 3225	(A,84,80)	RS1/16SS0R0J
R 3301	(B,48,46)	RS1/10SR4R7J
R 3302	(B,51,47)	RS1/10SR56R0D
R 3303	(B,51,44)	RS1/10SR1800D
R 3304	(B,53,44)	RS1/10SR2R2J
R 3305	(B,56,47)	RS1/10SR47R0D
R 3306	(B,56,44)	RS1/10SR0R0J
R 3307	(B,59,47)	RS1/10SR39R0D
R 3308	(B,60,44)	RS1/10SR4R7J
R 3309	(B,63,47)	RS1/10SR1000D
R 3310	(B,64,44)	RS1/10SR8R2J
R 3311	(B,66,47)	RS1/10SR1300D
R 3312	(B,67,44)	RS1/10SR0R0J
R 3313	(B,65,50)	RS1/10SR1000D
R 3314	(B,64,52)	RS1/10SR8R2J
R 3315	(B,61,50)	RS1/10SR39R0D
R 3316	(B,61,52)	RS1/10SR4R7J
R 3317	(B,58,50)	RS1/10SR47R0D
R 3318	(B,57,52)	RS1/10SR0R0J
R 3319	(B,54,50)	RS1/10SR1800D
R 3320	(B,54,52)	RS1/10SR2R2J
R 3321	(B,51,50)	RS1/10SR33R0D

Circuit Symbol and No.		Part No.
R 3322	(B,50,52)	RS1/10SR2R4J
R 3323	(B,28,24)	RS1/16SS473J
R 3324	(B,21,27)	RS1/16SS473J
R 3327	(B,23,27)	RS1/16SS473J
R 3328	(B,24,27)	RS1/16SS473J
R 3330	(A,6,46)	RS1/16SS472J
R 3332	(A,6,47)	RS1/16SS105J
R 3333	(A,4,50)	RS1/16SS682J
R 3334	(A,5,50)	RS1/16SS0R0J
R 3336	(A,9,53)	RS1/16SS101J
R 3339	(A,8,52)	RS1/16SS0R0J
R 3340	(A,4,29)	RS1/16SS0R0J
R 3341	(A,5,29)	RS1/16SS0R0J
R 3342	(A,6,29)	RS1/16SS0R0J
R 3343	(A,7,29)	RS1/16SS0R0J
R 3344	(A,143,6)	RS1/16SS183J

CAPACITORS

C 2705	(A,110,34)	10 uF	DCH1201
C 2706	(A,112,33)		CKSSYB104K10
C 2707	(A,115,36)		CKSSYB104K10
C 2708	(A,113,38)	10 uF	DCH1201
C 2803	(A,50,62)		CKSSYB104K10
C 2804	(A,51,63)		CKSSYB103K16
C 2805	(A,58,64)		CKSSYB103K16
C 2806	(A,58,63)		CKSSYB104K10
C 2807	(A,60,75)		CKSSYB103K16
C 2808	(A,61,75)		CKSSYB104K10
C 2809	(B,62,70)		CKSSYB104K10
C 2810	(B,61,71)		CKSSYB103K16
C 2814	(A,49,53)		CKSSYB103K16
C 2816	(A,52,54)	10 uF	DCH1201
C 2819	(A,35,80)		CKSRYB105K10
C 2820	(A,45,80)		CKSRYB105K10
C 2821	(A,41,77)		CKSRYB105K10
C 2822	(A,34,74)		CKSRYB105K10
C 2823	(A,44,71)		CKSSYB104K10
C 2824	(A,45,71)		CKSSYB103K16
C 2825	(A,52,79)		CKSSYB103K16
C 2826	(A,52,80)		CKSSYB104K10
C 2830	(A,65,79)		CKSQYB225K10
C 3002	(A,36,46)		CKSSYB104K10
C 3003	(A,36,48)		CKSSYB104K10
C 3004	(A,37,51)		CKSSYB104K10
C 3005	(A,37,52)		CKSSYB104K10
C 3006	(A,38,55)		CKSSYB104K10
C 3007	(A,34,41)		CKSSYB104K10
C 3008	(A,31,60)		CKSSYB104K10
C 3010	(A,30,42)		CKSSYB104K10
C 3011	(A,29,59)		CKSSYB104K10
C 3013	(A,29,41)		CKSSYB104K10
C 3014	(A,28,59)		CKSSYB104K10
C 3015	(A,26,39)		CCSSCH470J50
C 3019	(B,30,44)	10 uF	CCG1192
C 3021	(A,24,42)		CKSSYB104K10
C 3022	(A,24,59)		CKSSYB104K10
C 3023	(B,27,42)		CKSSYB104K10
C 3024	(A,20,40)		CKSSYB104K10
C 3025	(B,23,41)		CKSRYB474K10

Circuit Symbol and No.		Part No.
C 3026	(A,20,41)	CKSSYB104K10
C 3027	(A,19,51)	CKSSYB104K10
C 3028	(A,18,53)	CKSSYB104K10
C 3029	(A,19,57)	CKSSYB104K10
C 3030	(A,16,42)	CKSSYB152K50
C 3031	(A,21,42)	CKSSYB104K10
C 3032	(A,19,43)	CKSSYB104K10
C 3033	(A,19,45)	CKSSYB104K10
C 3037	(A,17,47)	CCSSCH120J50
C 3038	(A,19,47)	CKSSYB103K16
C 3040	(A,17,41)	CCSSCH4R0C50
C 3041	(A,13,50)	CCSSCH120J50
C 3042	(B,18,42) 4.7 uF	CCG1201
C 3043	(A,18,48)	CKSSYB104K10
C 3044	(A,14,58)	CKSSYB103K16
C 3046	(B,31,38)	CKSSYB104K10
C 3101	(A,141,75) 10 uF	CCG1236
C 3102	(A,139,78)	CKSSYB104K16
C 3103	(A,137,80)	CKSSYB104K10
C 3104	(A,137,79)	CKSSYB104K10
C 3105	(A,109,52) 10 uF	CCG1236
C 3106	(A,118,65) 10 uF	CCG1236
C 3107	(B,134,71) 2.2 uF	CCG1218
C 3108	(A,118,60) 10 uF	CCG1236
C 3109	(A,135,60) 10 uF	CCG1236
C 3110	(A,133,58) 10 uF	CCG1236
C 3111	(A,133,56) 10 uF	CCG1236
C 3201	(A,92,65)	CKSSYB102K50
C 3202	(B,96,75)	CKSRYB105K16
C 3203	(B,95,65) 1 uF	DCH1246
C 3205	(B,79,68)	CKSQYB105K25
C 3206	(B,79,70)	CKSQYB105K25
C 3208	(B,92,75)	CKSRYB104K50
C 3209	(B,85,68)	CKSRYB104K50
C 3210	(B,85,70)	CKSRYB104K50
C 3211	(A,100,72)	CKSSYB224K6R3
C 3212	(A,100,71)	CKSSYB224K6R3
C 3214	(A,100,70) 1 uF	DCH1246
C 3215	(A,88,72)	CKSYB475K16
C 3216	(A,99,68)	CKSRYB682K50
C 3217	(A,83,63) 4.7 uF	CCG1201
C 3218	(B,81,71)	CCSRCH561J50
C 3219	(A,94,74)	CCSSCH101J50
C 3220	(A,85,60)	CKSRYB222K50
C 3221	(A,92,74)	CKSRYB224K16
C 3222	(A,90,60)	CKSYB475K16
C 3223	(A,92,60)	CKSYB475K16
C 3224	(A,97,66)	CCSRCH471J50
C 3309	(B,65,45)	CKSSYB102K50
C 3310	(B,65,44)	CKSSYB104K10
C 3311	(B,66,51)	CKSSYB102K50
C 3312	(B,66,52)	CKSSYB104K10
C 3321	(B,29,26)	CKSSYB102K50
C 3322	(B,29,27)	CKSSYB104K16
C 3323	(A,25,34) 10 uF/16 V	DCH1263
C 3326	(A,16,35)	CKSSYB102K50
C 3328	(B,27,26)	CKSSYB102K50
C 3329	(B,27,27)	CKSSYB104K10
C 3330	(A,23,30) 10 uF	DCH1201
C 3333	(A,19,30)	CKSSYB104K16

Circuit Symbol and No.		Part No.
C 3334	(A,14,33) 4.7 uF	CCG1201
C 3336	(A,9,35)	CKSQYB225K16
C 3338	(A,14,31)	CKSQYB334K50
C 3342	(A,14,28)	CKSSYB104K10
C 3343	(A,6,48)	CKSSYB104K10
C 3344	(A,6,58) 10 uF	CCG1236
C 3345	(A,142,6)	CKSSYB104K10
C 3346	(A,145,4)	CKSSYB104K10

F

Unit Number : CXX8724
Unit Name : Key Unit(Service)

MISCELLANEOUS

D 3401	(A,152,5) LED	SMLVN6RGB2UK(B)
D 3402	(A,16,5) LED	SMLVN6RGB2UK(B)
S 3401	(A,101,5) Push Switch	CSG1196
S 3402	(A,116,5) Push Switch	CSG1196
S 3403	(A,131,5) Push Switch	CSG1196
S 3404	(A,143,5) Push Switch	CSG1196
S 3405	(A,36,5) Push Switch	CSG1196
S 3406	(A,50,5) Push Switch	CSG1196
S 3407	(A,65,5) Push Switch	CSG1196
S 3408	(A,83,6) Push Switch	CSG1196
S 3409	(A,158,5) Push Switch	CSG1196
U 3401	(A,7,6) Remote Receiver Unit	RS-470
CN3401	(A,23,6) Connector	CKS6421

RESISTORS

R 3402	(A,9,3)	RS1/16SS470J
R 3403	(A,96,3)	RS1/16SS182J
R 3404	(A,112,3)	RS1/16SS222J
R 3405	(A,126,3)	RS1/16SS472J
R 3406	(A,137,4)	RS1/16SS123J
R 3407	(A,45,3)	RS1/16SS182J
R 3408	(A,61,5)	RS1/16SS222J
R 3409	(A,77,5)	RS1/16SS472J
R 3410	(A,148,6)	RS1/16SS150J
R 3411	(A,147,6)	RS1/16SS620J
R 3412	(A,147,3)	RS1/16SS390J
R 3413	(A,19,6)	RS1/16SS150J
R 3414	(A,17,7)	RS1/16SS620J
R 3415	(A,18,7)	RS1/16SS390J

CAPACITORS

C 3407	(A,7,4)	CKSSYB104K10

G

Unit Number : CXX8729
Unit Name : Case Unit(Service)

MISCELLANEOUS

D 3451	(A,77,34) Diode	DZ2S068C
D 3452	(A,77,36) Diode	DZ2S068C
D 3453	(A,74,34) Diode	DZ2S068C
D 3454	(A,74,37) Diode	DZ2S068C
D 3456	(A,72,34) Diode	DZ2S068C

Circuit Symbol and No.			Part No.
D 3457	(A,71,36)	Diode	DZ2S068C
D 3458	(A,71,34)	Diode	DZ2S068C
D 3459	(A,68,36)	Diode	DZ2S068C
D 3461	(A,66,36)	Diode	DZ2S068C
D 3462	(A,68,34)	Diode	DZ2S068C
D 3463	(A,65,36)	Diode	DZ2S068C
D 3464	(A,66,34)	Diode	DZ2S068C
D 3465	(A,62,36)	Diode	DZ2S068C
D 3466	(A,65,34)	Diode	DZ2S068C
D 3467	(A,60,36)	Diode	DZ2S068C
D 3468	(A,63,33)	Diode	EZAEG2A50AX
D 3469	(A,62,33)	Diode	EZAEG2A50AX
D 3470	(A,59,33)	Diode	EZAEG2A50AX
D 3471	(A,58,33)	Diode	EZAEG2A50AX
D 3472	(A,52,35)	Diode	EZAEG2A50AX
D 3473	(A,52,37)	Diode	EZAEG2A50AX
D 3474	(A,44,34)	Diode	DZ2S068C
D 3475	(A,49,36)	Diode	DZ2S068C
D 3476	(A,45,36)	Diode	DZ2S068C
D 3477	(A,42,34)	Diode	DZ2S068C
D 3478	(A,42,36)	Diode	DZ2S068C
D 3479	(A,40,36)	Diode	DZ2S068C
D 3480	(A,40,34)	Diode	DZ2S068C
D 3481	(A,38,34)	Diode	DZ2S068C
D 3482	(A,53,33)	Diode	EZAEG2A50AX
D 3483	(A,56,33)	Diode	EZAEG2A50AX
D 3484	(A,60,33)	Diode	EZAEG2A50AX
D 3485	(A,61,33)	Diode	EZAEG2A50AX
CN3451	(A,23,13)	Connector	CKS6366
CN3452	(A,51,13)	Connector	CKS6366
CN3453	(B,59,37)	Connector	CKS6646

H

Unit Number : CXX8728
Unit Name : SW Unit(Service)

MISCELLANEOUS

S 3501	(A,18,7)	Switch(OFF SENS)	CSN1085
S 3502	(A,21,24)	Switch(LOCK)	CSN1086
CN3501	(A,7,25)	Connector	DKN1220

I

Unit Number : EXX2001
Unit Name : PCB Assy (Service)

MISCELLANEOUS

IC 101	Driver IC	BA6288FS
VR101	Volume 10 kohm	CCW1029
S 101	Switch(HOME)	CSN1067
S 102	Switch(HOME)	CSN1068
CN101	Connector	CKS4997

RESISTORS

R 101	RS1/16S221J
R 102	RS1/16S221J
R 103	RS1/16S0R0J

CAPACITORS

Circuit Symbol and No.	Part No.
C 101	CEVW220M16
C 102	CKSRYB104K16