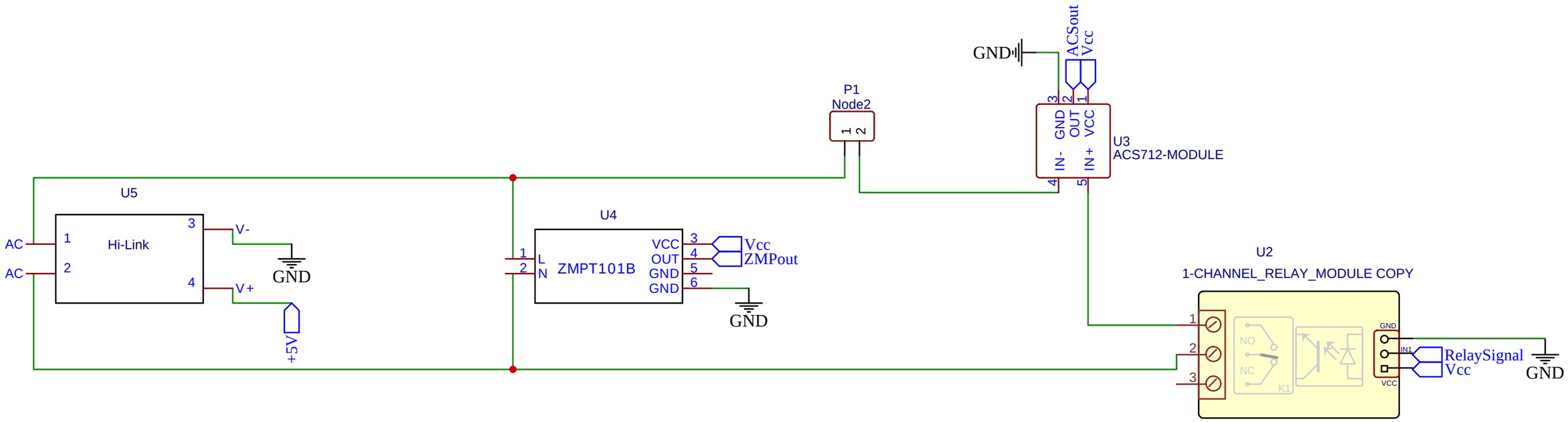

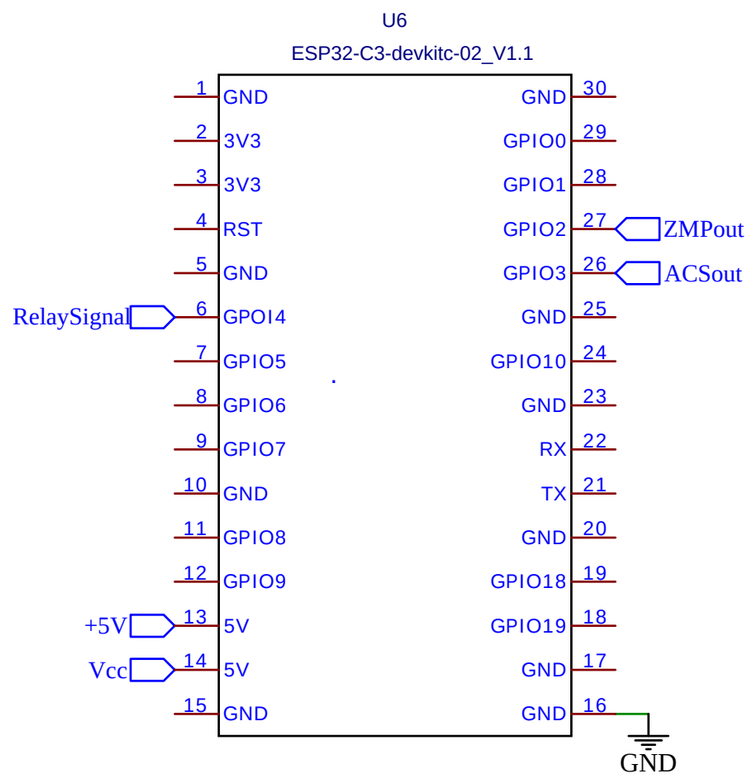

TITLE: Sheet_1	REV: 1.0
EasyEDA Company: Your Company	Sheet: 1/1
Date: 2023-12-15 Drawn By: Shebin Jose Jacob	