PC NO	PART NAME	QTY
1	N_DRUCKFEDER DIN 2098 0,5X6X10	1
2	N_EINSCHMELZMUTTER M4	3
3	N_ZYLINDERSCHRAUBE ISO 4762-M4X12	2
4	N_ZYLINDERSCHRAUBE ISO 4762-M4X20	1
5	T024_KLEMMHEBEL	1
6	T025_TAPEKLEMME	1

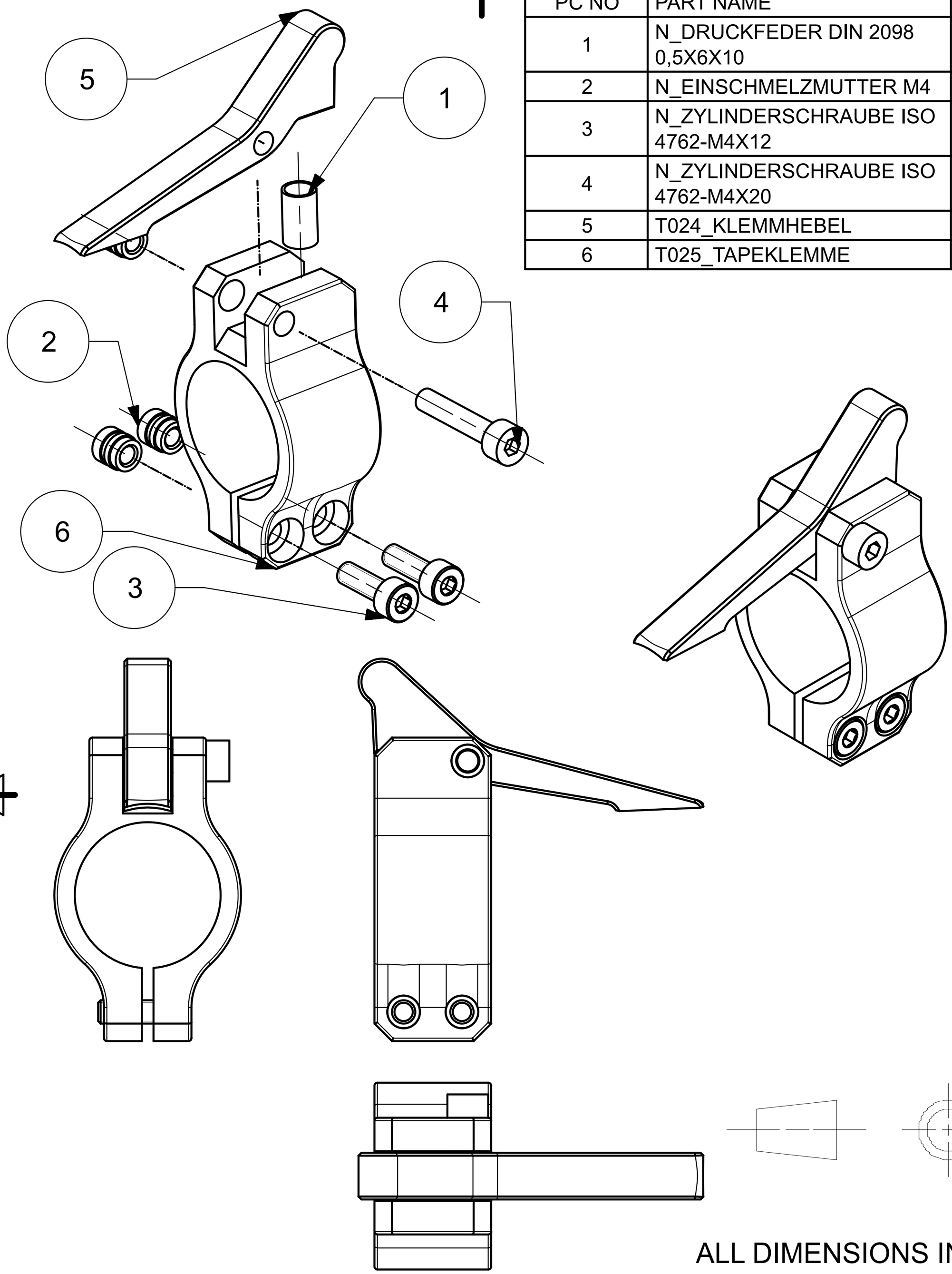

ALL DIMENSIONS IN mm

FIRST ISSUED	
DRAWN BY	
CHECKED BY	
APPROVED BY	

HOCHSCHULE OSNABRÜCK
UNIVERSITY OF APPLIED SCIENCES

SIZE	NAME	SHEET REV
297.0 x 210.0	B11_TapeKlemme	A

SCALE 1:1 | SHEET 1 OF 1

297.0 x 210.0