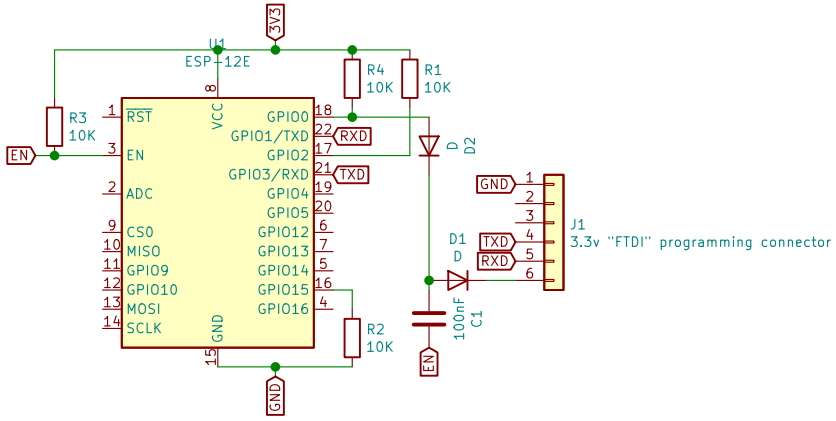

Sheet: /
File: esp12_trivial_programmer.sch

Title:

Size: A4	Date:	Rev:
KiCad E.D.A. kicad 5.1.6+dfsg1-1		Id: 1/1