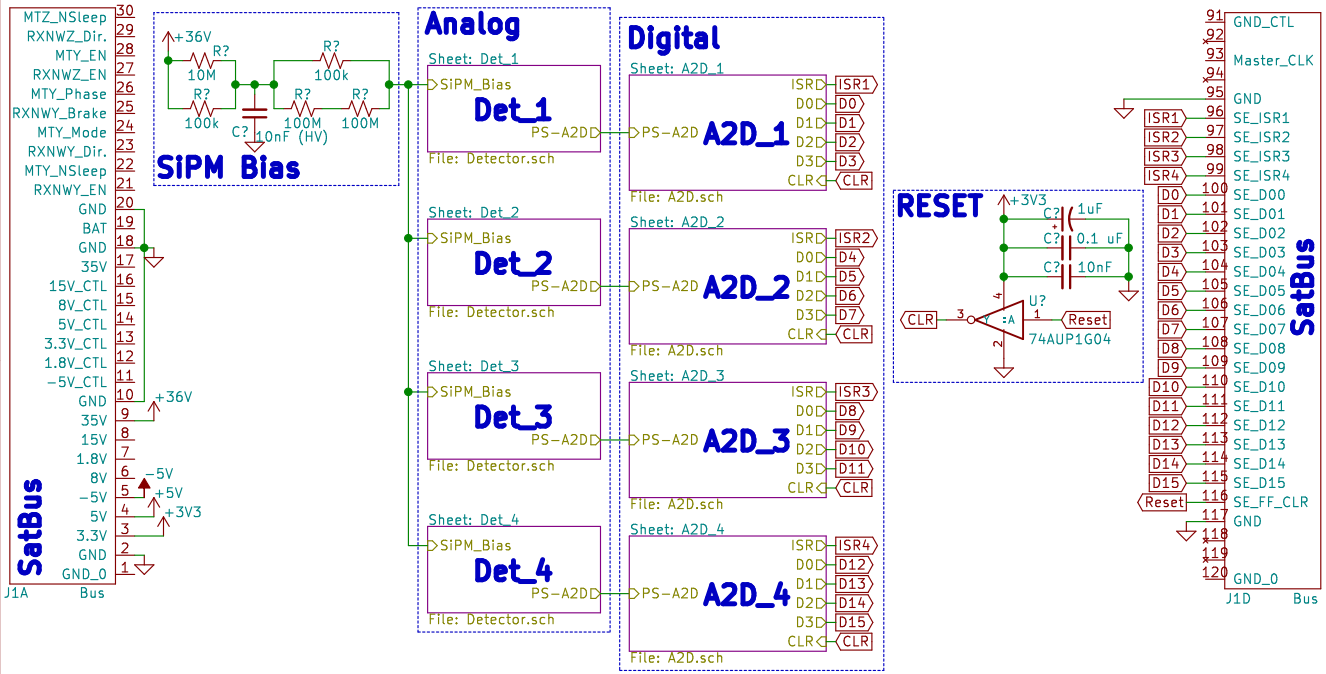

Sheet: /
File: Radiation_Detector.sch

Title:

Size: A4	Date:	Rev:
KiCad E.D.A. kicad (5.0.2)-1		Id: 1/9

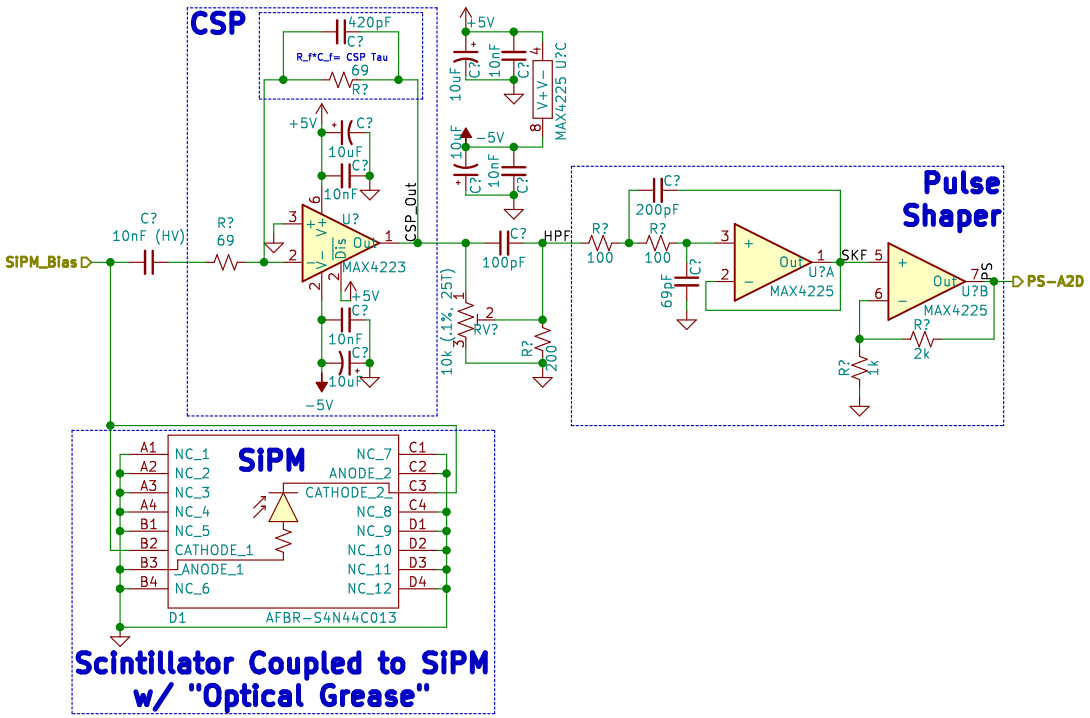

Sheet: /Det_1/
File: Detector.sch

Title:

Size: A4	Date:	Rev:
KiCad E.D.A. kicad (5.0.2)−1		Id: 2/9

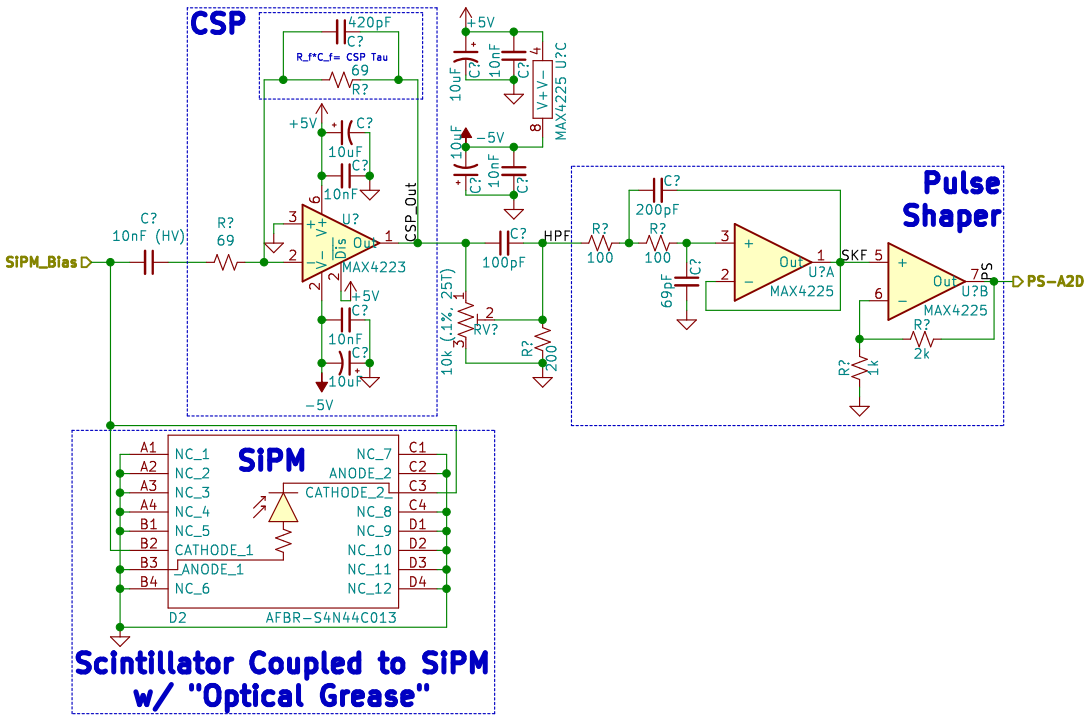

Sheet: /Det_2/
File: Detector.sch

Title:

Size: A4	Date:	Rev:
KiCad E.D.A. kicad (5.0.2)-1		Id: 3/9

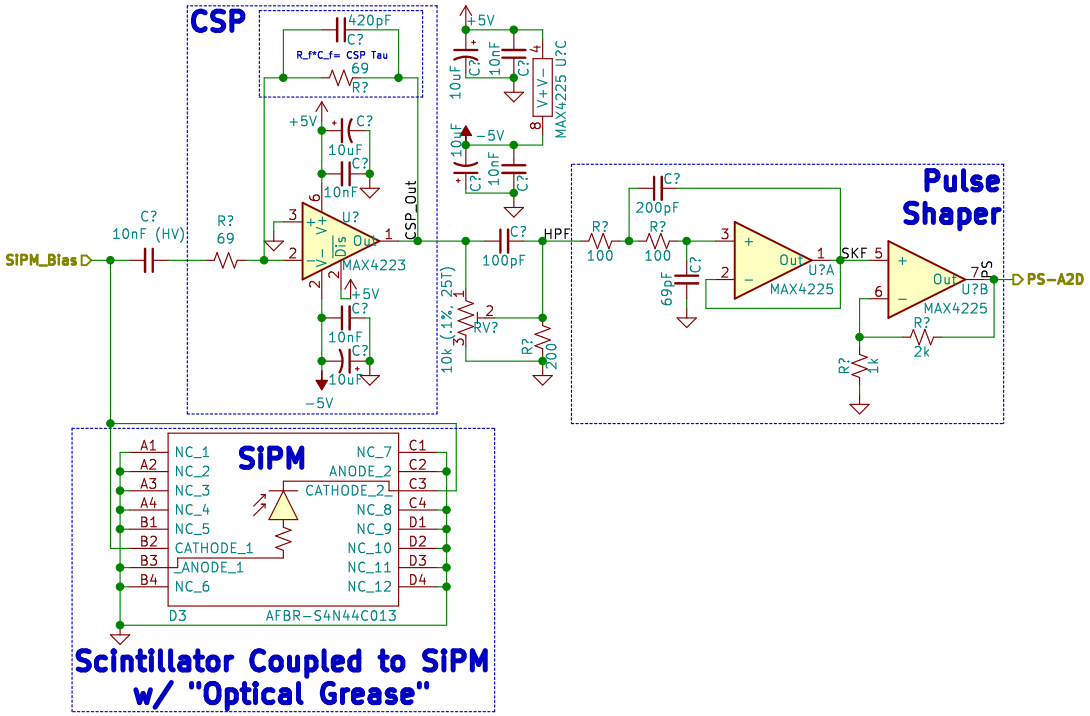

Sheet: /Det_3/
File: Detector.sch

Title:

Size: A4	Date:	Rev:
KiCad E.D.A. kicad (5.0.2)−1		Id: 4/9

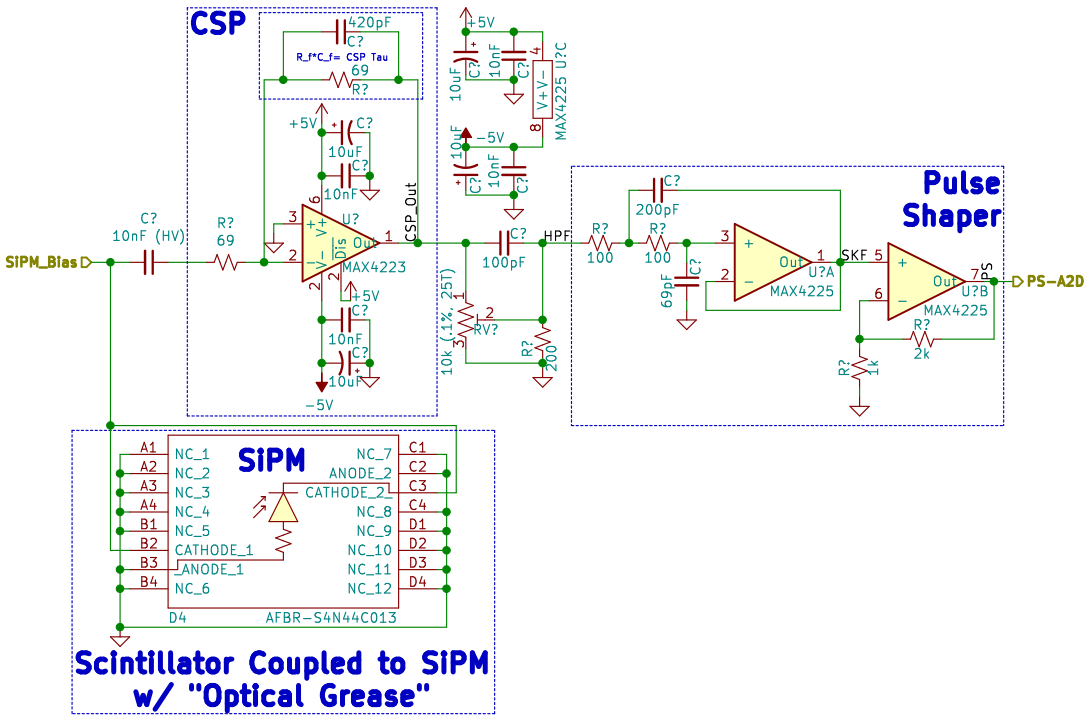

Sheet: /Det_4/
File: Detector.sch

Title:

Size: A4	Date:	Rev:
KiCad E.D.A. kicad (5.0.2)-1		Id: 5/9

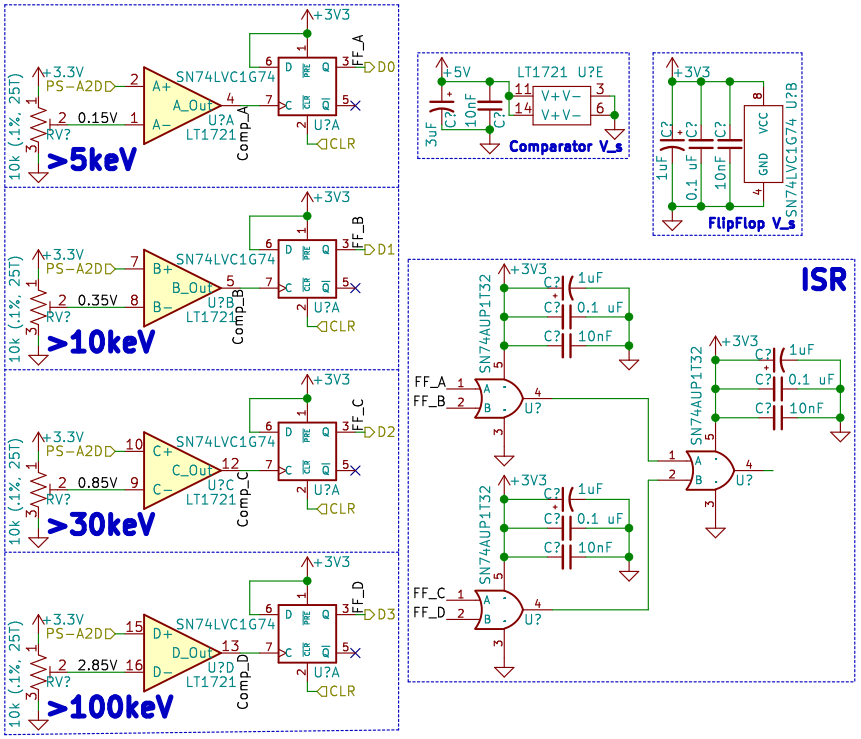

Sheet: /A2D_1/
File: A2D.sch

Title:

Size: A4	Date:	Rev:
KiCad E.D.A. kicad (5.0.2)-1		Id: 6/9

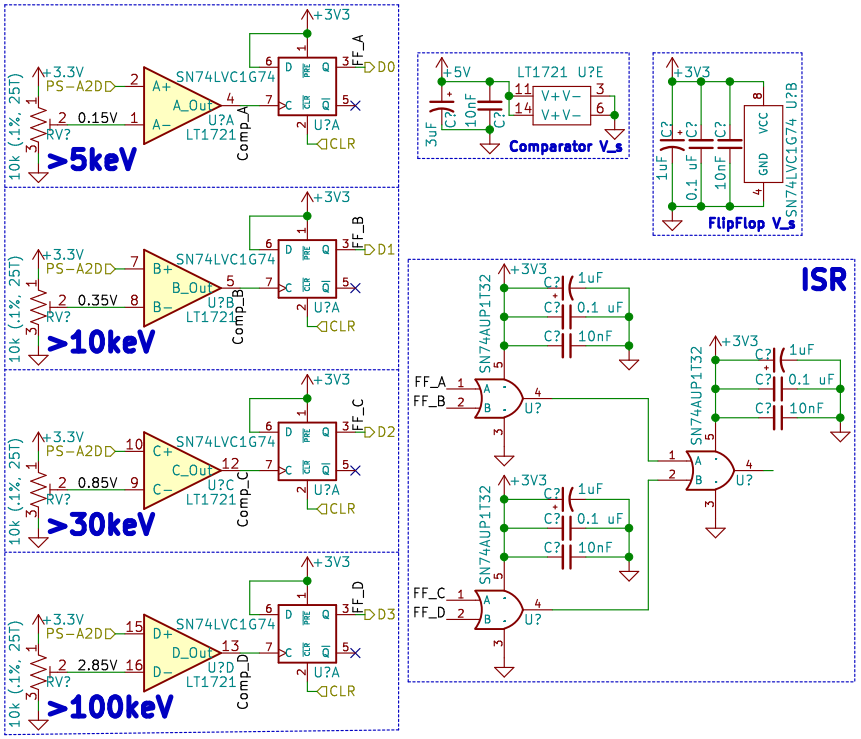

Sheet: /A2D_2/
File: A2D.sch

Title:

Size: A4	Date:	Rev:
KiCad E.D.A. kicad (5.0.2)-1		Id: 7/9

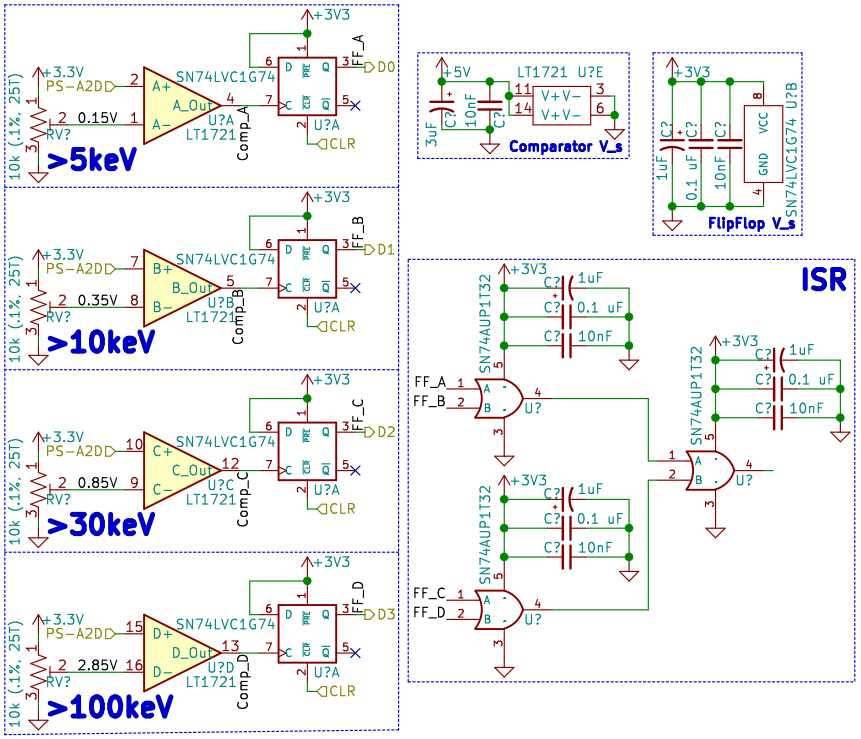

Sheet: /A2D_3/
File: A2D.sch

Title:

Size: A4	Date:	Rev:
KiCad E.D.A. kicad (5.0.2)-1		Id: 8/9

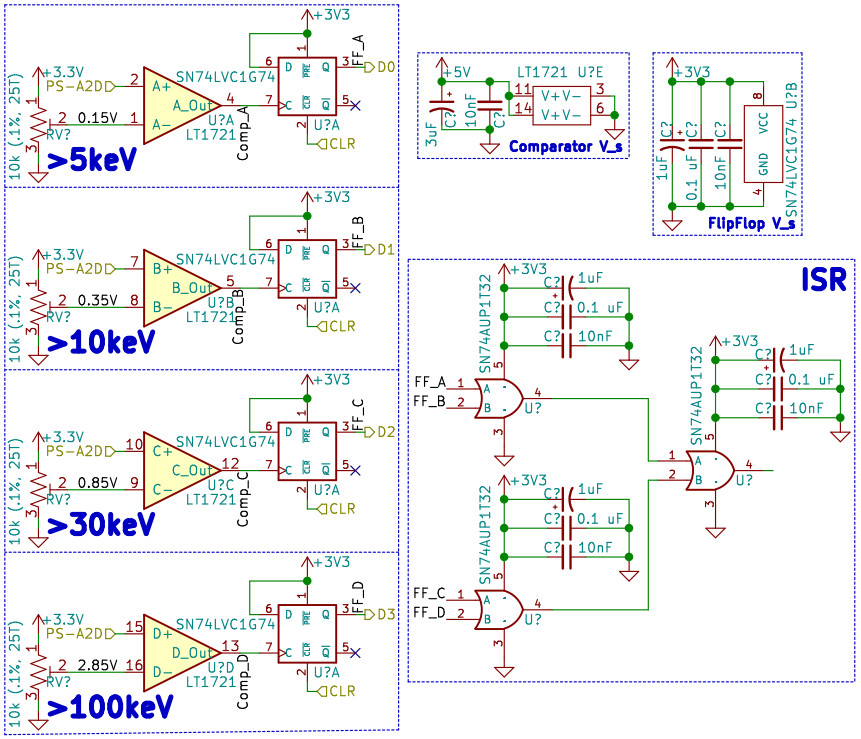

Sheet: /A2D_4/
File: A2D.sch

Title:

Size: A4	Date:	Rev:
KiCad E.D.A. kicad (5.0.2)-1		Id: 9/9