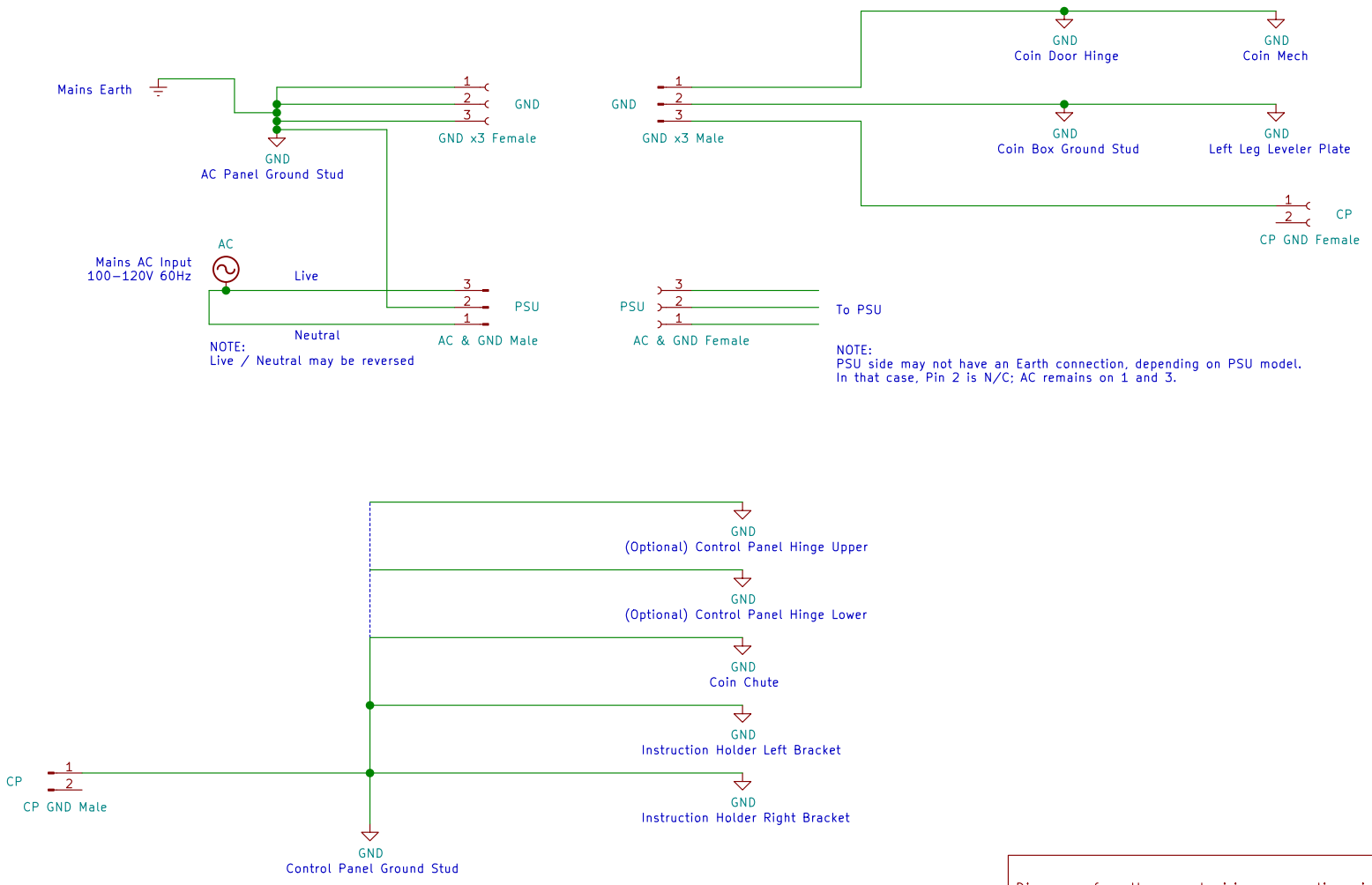

According to Sega spec, all ground wiring is 18AWG UL1015
in Green or Yellow–striped Green

Diagram of earth ground wiring connections in a Sega Astro City or early model New Astro City arcade cabinet. Updated based on official Sega wiring diagrams.

Softdrink 117

Sheet: /
File: NAC–Ground–Wiring.sch

Title: Astro/New Astro City Ground Wiring

Size: A4	Date: 2020–12–21	**Rev: 1.1b**
KiCad E.D.A. kicad (5.1.4)–1		Id: 1/1