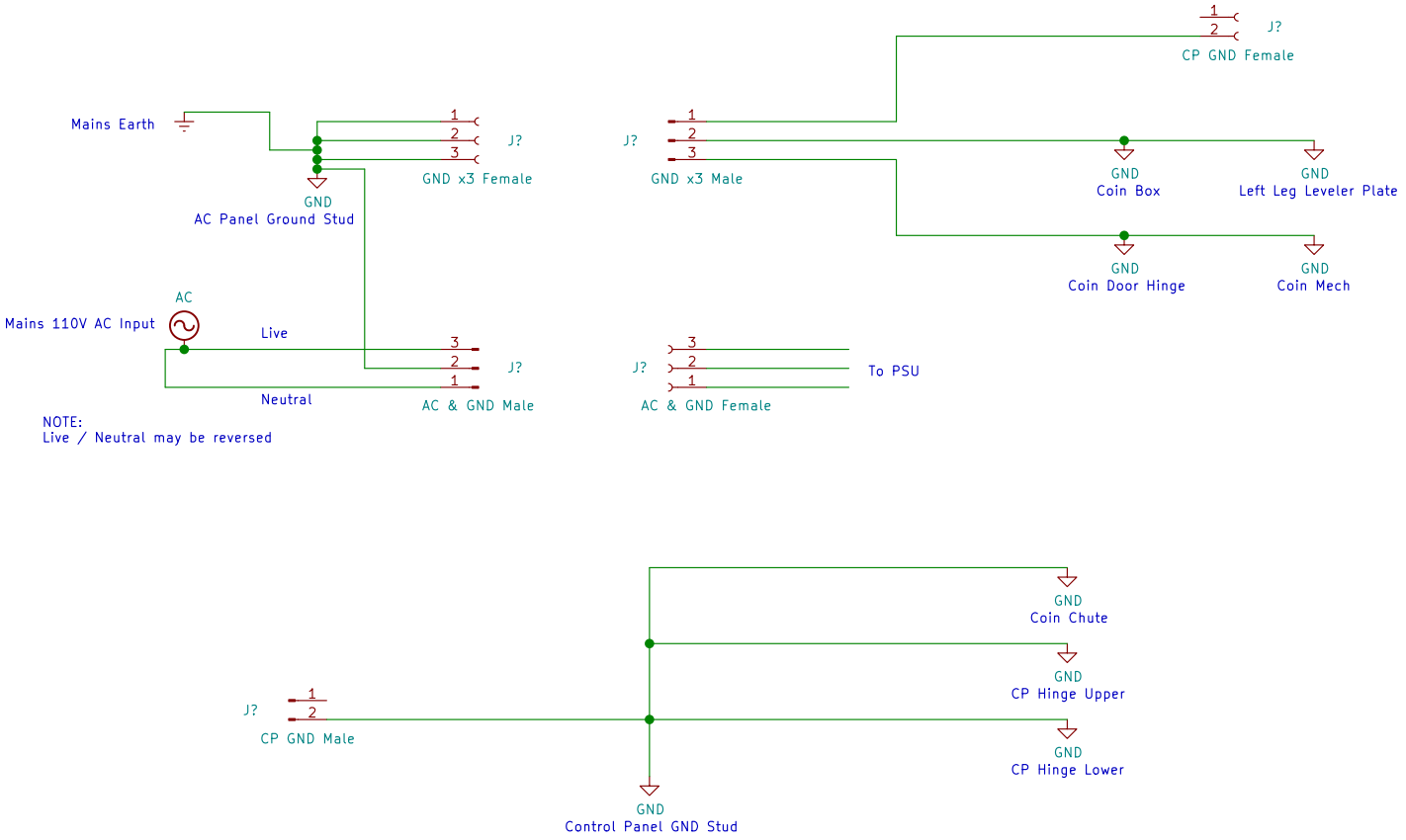

Diagram of current ground wiring connections in my Sega New Astro City arcade cabinet.
I'm not sure if this matches the 'canonical' ground layout as originally designed.

Softdrink 117

Sheet: /
File: NAC-Ground-Wiring.sch

Title: New Astro City Ground Wiring

Size: A4	Date: 2020-12-21	**Rev: 1.0**
KiCad E.D.A. kicad (5.1.4)-1		Id: 1/1