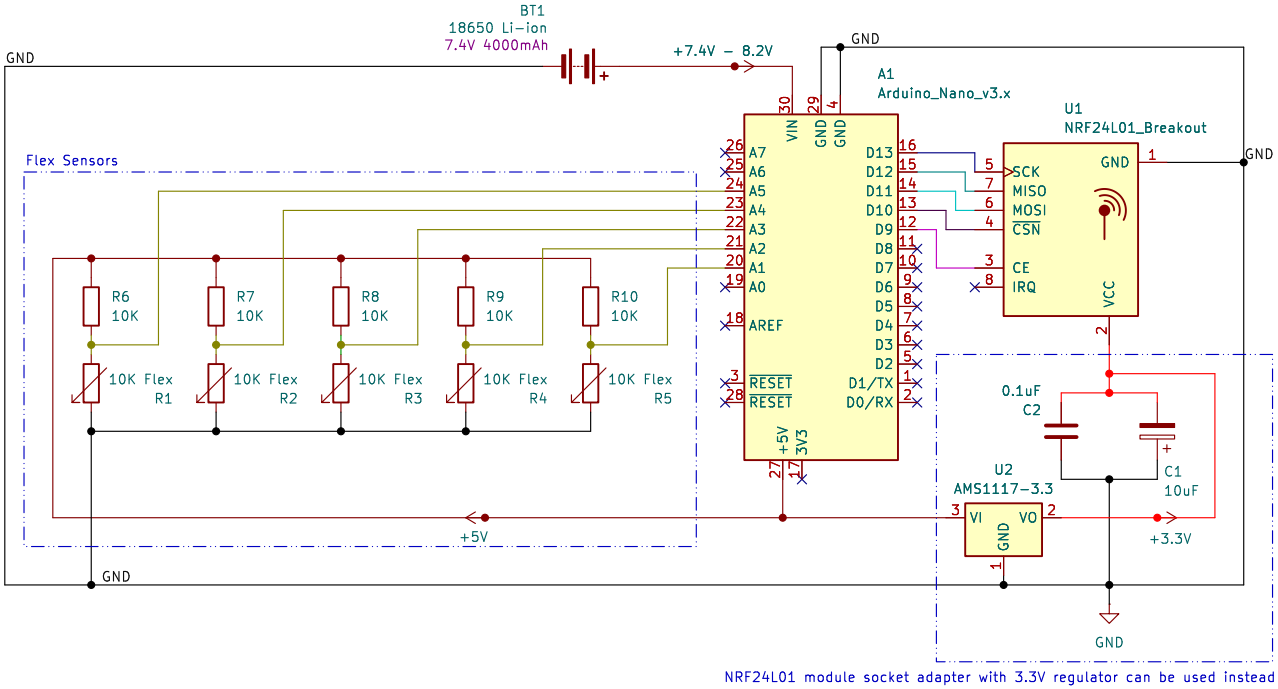


github.com/SoloScriptSage/robotic-hand-project

**SoloScriptSage**

Sheet: /
File: robotic_hand.kicad_sch

***Title: Robotic Hand Transmitter***

| | | |
|---|---|---|
| Size: A4 | Date: 2025-06-09 | **Rev: v2.0** |
| KiCad E.D.A. 9.0.2 | | Id: 1/1 |