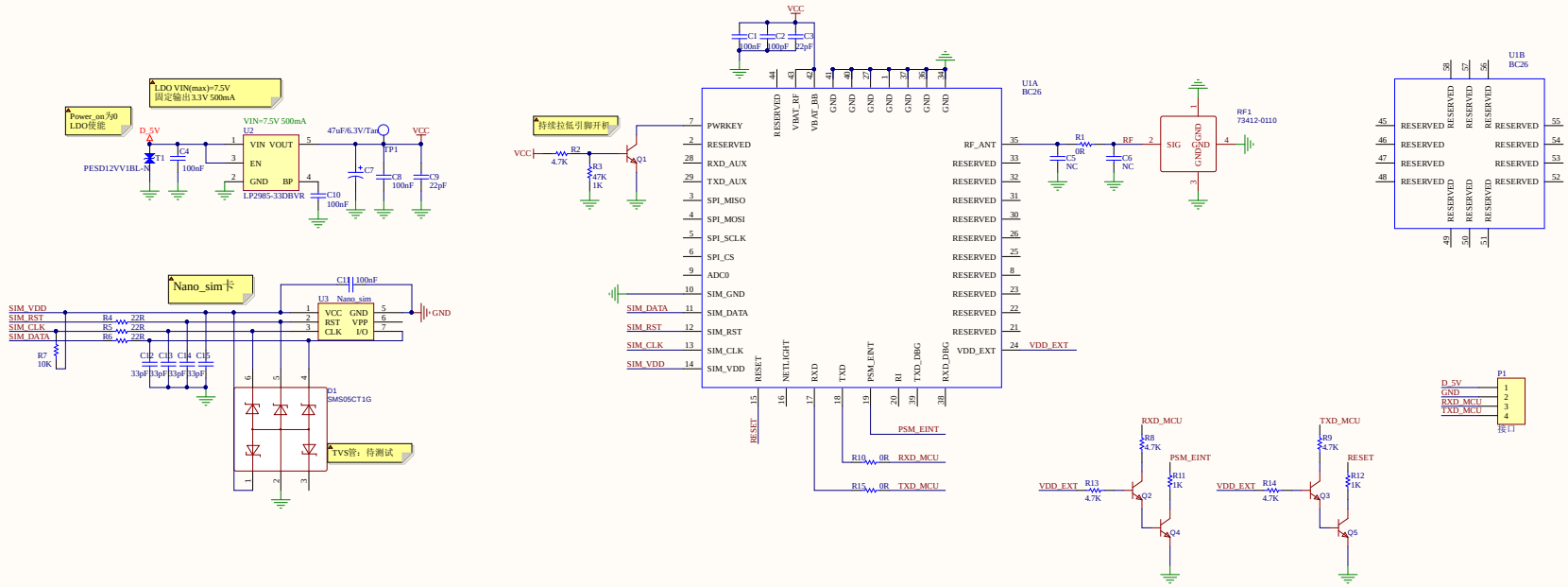

Title		
Size A2	Number	Revision
Date: 2020/5/15	Sheet of	
File: D:\游贝上\无线\无线放置板\无线小板.SchDoc	Drawn by:	