USB-C DP Source

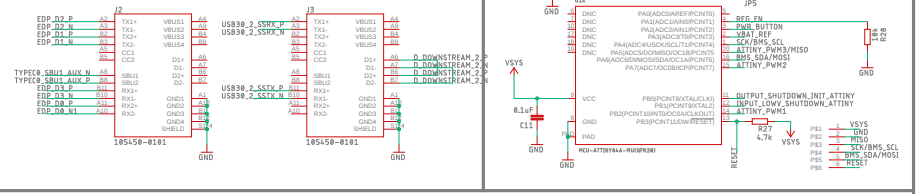

USB-C DP/3.0 Sink

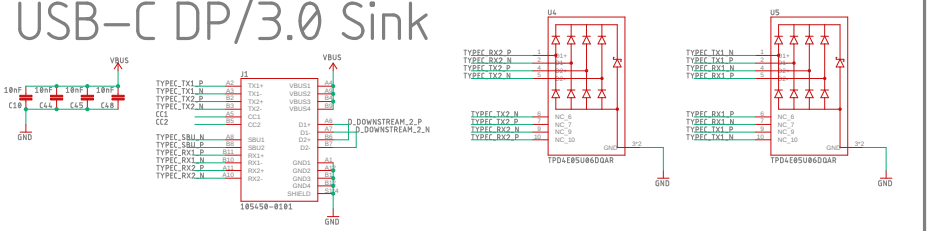

Power Path Management

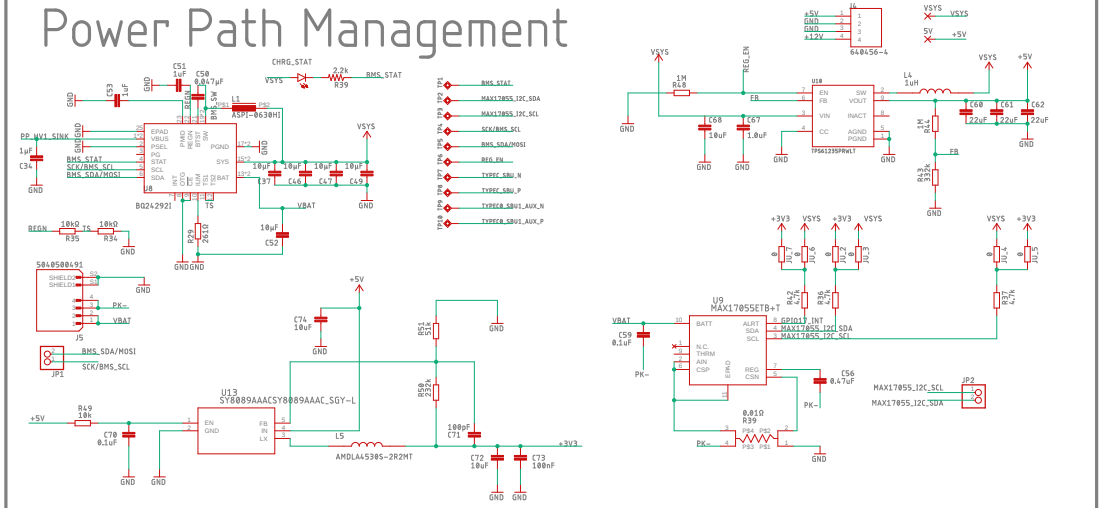

BQ24292i controls VBUS power path and charges lithium ion cells. MAX17055 is used for battery management. 5V 3A boost regulator to power CM5. 3v3 buck is to power the WiFi PCIe card, TPS65987D, etc.

TPS65987D PD Controller

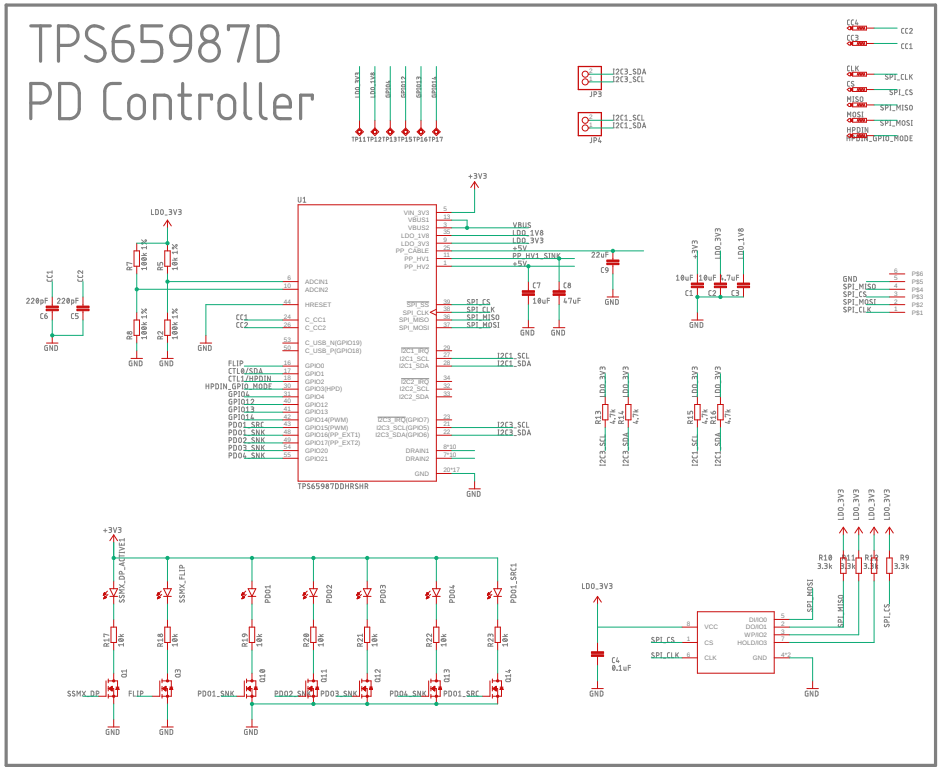

TUSB546 High Speed Mux

Note: Ensure jumper is correctly populated for I2C/GPIO mode..

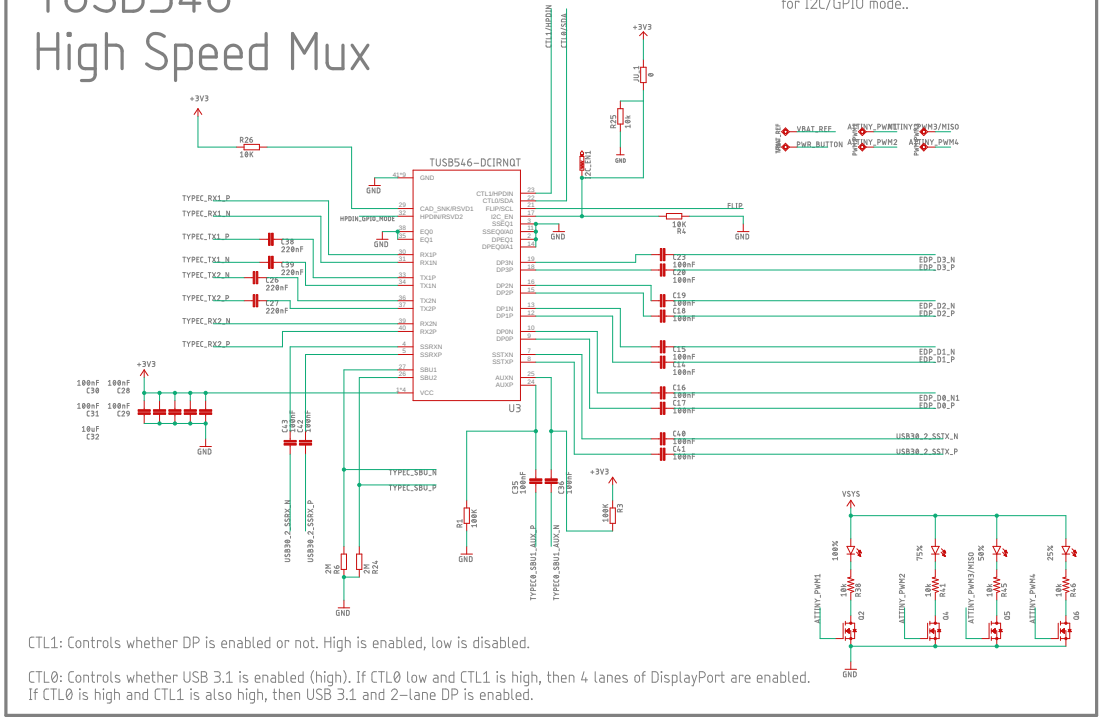

CTL1: Controls whether DP is enabled or not. High is enabled, low is disabled.

CTL0: Controls whether USB 3.1 is enabled (high). If CTL0 low and CTL1 is high, then 4 lanes of DisplayPort are enabled. If CTL0 is high and CTL1 is also high, then USB 3.1 and 2-lane DP is enabled.