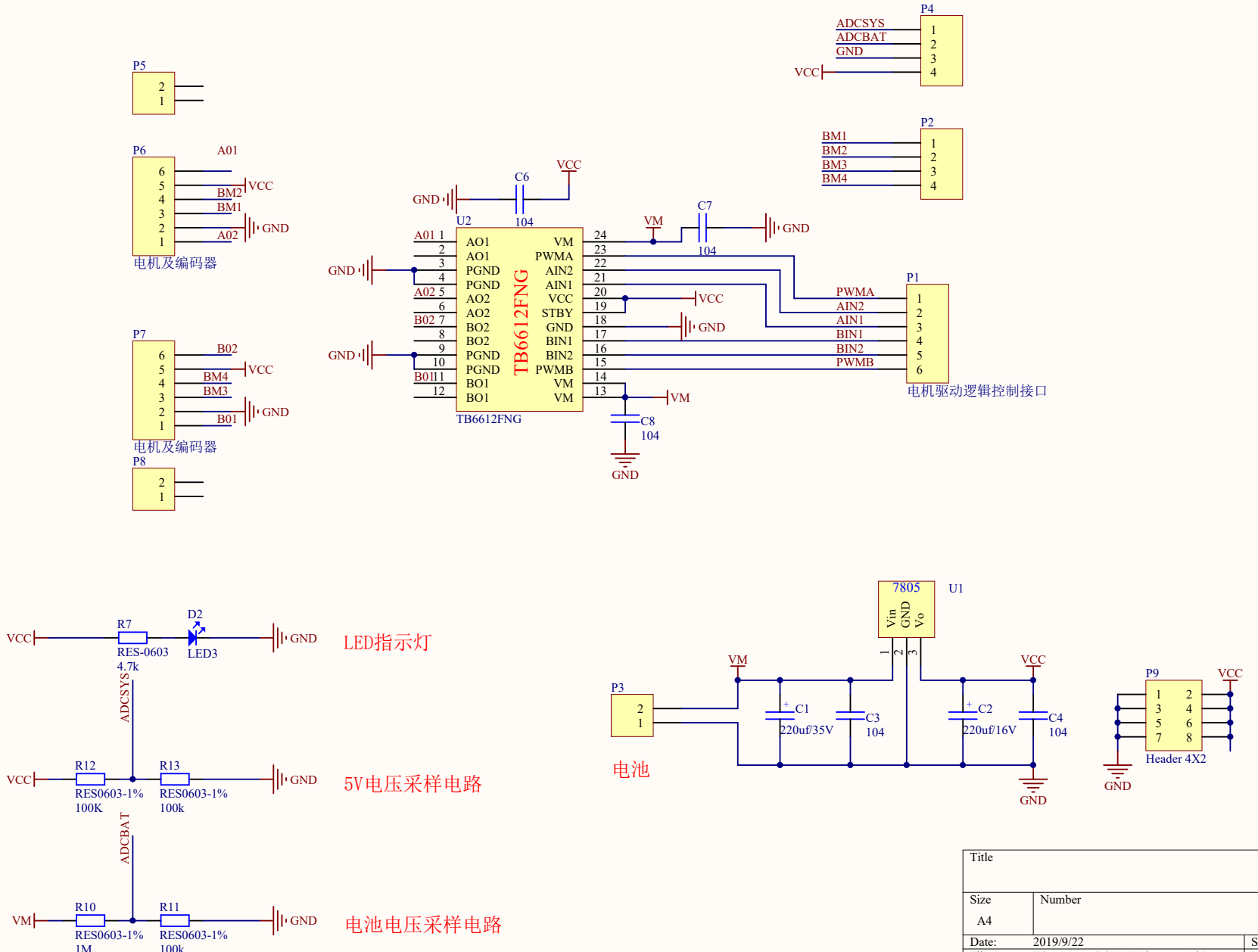

Title		
Size A4	Number	Revision
Date: 2019/9/22		Sheet of
File: E:\ \..\MCW-2motos.SchDoc		Drawn By: